OPERATOR'S MANUAL

Actros/Arocs

Mercedes-Benz

Trucks you can trust

Name:	OPERATOR'S MANUAL
Product:	963
Language:	ENG
Internet	Further information about Mercedes-Benz vehicles and Daimler Truck AG is available online at: https://www.mercedes-benz-trucks.com Operating instructions and supplements for your vehicle as well as Custom Tailored Trucks special conversions (CTT) are available online at: https://manuals.daimlertruck.com/truckownermanuals/home
Editors	You are welcome to forward any queries or suggestions you may have regarding these operating instructions to the Documentation team at the following address: feedback_owner_manual@daimlertruck.com
	© Daimler Truck AG: Do not reprint, translate, or duplicate, in full or in part, without the written permission of Daimler Truck AG. Editorial status: 04.07.2025
Vehicle manufacturer	**Daimler Truck AG** Fasanenweg 10 70771 Leinfelden-Echterdingen **Germany**
Item number:	A9605847391

Preface

Welcome to the world of Mercedes-Benz Trucks

Before you drive off for the first time, read these operating instructions carefully and familiarise yourself with your vehicle. Please adhere to the information and warning notes in these operating instructions for your own safety, and to ensure a longer operating life for your vehicle. Disregarding them may lead to vehicle damage or personal injury.

The standard equipment and product description of your vehicle may vary, and depends on the following factors:

- Model
- Order
- National version
- Availability

The illustrations in these operating instructions show a left-hand drive vehicle. The locations of vehicle parts and controls for right-hand drive vehicles differ accordingly.

Daimler Truck AG is continuously improving its vehicles.

Daimler Truck AG therefore reserves the right to introduce changes in the following areas:

- Design
- Equipment
- Technical features

Therefore the descriptions and illustrations provided may occasionally differ from your own vehicle.

The following documents are integral parts of the vehicle:

- Operator's Manual
- Maintenance booklet (vehicles without digital maintenance documentation)
- Equipment-dependent supplementary instructions

For reasons of clarity, merely the masculine form is frequently used. All gender identities are, of course, always implied.

Always keep these documents in the vehicle. If you sell the vehicle, always pass on all documents to the new owner.

Vehicles with digital maintenance documentation: For verification pages relating to vehicle data and bodybuilders, see the section entitled “Confirmations”.

Vehicles without digital maintenance documentation: See maintenance booklet for verification pages.

Daimler Truck AG

Document organisation 1

Use and meaning of symbols 1

Useful information 1

Factual and environmental information 1

Warning notices 1

Symbols and structuring tools . . . 1

General notes 2

Environmental protection 2

Information on device batteries 2

Mercedes-Benz Genuine Parts 2

Information about attachments, add-on equipment, installations and conversions 3

Operator's Manual 5

Operating safety 5

Declarations of Conformity and National Notes 7

Electromagnetic compatibility . . . 7

Jack 7

Diagnostics connection 8

Notes on changes to the engine output 9

Qualified specialist workshop 9

Vehicle registration 10

Correct use of the vehicle 10

Information on the REACH regulation 10

EU and EFTA countries only: . . . 10

Notes for persons with electronic medical aids 11

Liability for material defects 11

Warranty claims for material defects for new vehicles 11

Information on the material defects warranty 11

Data storage 12

Data processing in the vehicle 12

Information on service providers 15

Data protection information . . . 16

Copyright 16

At a glance 17

Cockpit 17

Overhead control panel 19

Instrument cluster 21

Multimedia cockpit displays . . . 21

Multimedia cockpit displays . . . 23

Multimedia cockpit warning /indicator lamps 25

Interactive multimedia cockpit warning/indicator lamps 27

Switch panels 29
Switch panels in the cockpit . . . 29
Bunk switch panel 33
Multifunction steering wheel 34
Combination switch and multifunction lever 36

Occupant safety 38

Restraint system 38
Protection provided by the restraint system 38
Limitations of the protection provided by the restraint system 38
Operational readiness of the restraint system 39
Restraint system malfunction . . . 39
Function of the restraint system in the event of an accident 39
Seat belts 40
Protection provided by the seat belt 40
Limitations of the protection provided by the seat belt 41
Wearing a seatbelt during pregnancy 42
Fastening and adjusting the seat belts 43
Releasing the seat belt 44
Function of the seat belt warning for the driver and co-driver 44
Airbag 44
Airbag installation location 44
Protection provided by the airbag 44
Limitations of the protection provided by the airbag 45
Travelling safely with children in the vehicle 46
Always observe when children are travelling in the vehicle 46
Be diligent 46
The generic term child restraint system 46
Observe laws and regulations . . . 47
Detecting risks, avoiding dangers 47
Securing the child restraint system with the seat belt on the co-driver's seat 49
Notes on pets in the vehicle 51

Opening and closing 52

Electronic key 52
Overview of electronic keys 52
Using the emergency key element 52
Deactivating the function of the key 53
Carry out lamp check with the key 53
Central locking system 53
Unlocking and locking the central locking system 53
Operating the convenience central locking system 55
Cab lock anti-intrusion protection 57

ATA (Anti-Theft Alarm system) 57
Notes on ATA 57
Switching ATA on/off 58
Activating/deactivating the panic alarm 59
Replacing the key battery 60
Problems with the locking system 61
Getting in and out 61
Side windows 63
Opening and closing the side windows 63
Resetting the side windows 64
Roof 65
Operating the sliding sunroof and the pop-up roof 65
Opening and closing the roof hatch 69
Opening and closing the circular roof hatch 69
Retracting/extending the roller sunblind 71

Driver cockpit 72
Notes on the seats 72
Operating the seat 74
Bunks and daybeds in the L cab . . . 78
Overview of bunks and daybeds 78
Information on the climbing aid 78
Folding the top bunk up/down 78
Folding the bottom bunk up/down 80
Notes on seat/daybed combinations 82
Folding the top bunk up/down 83
To pull out or push in bottom bunk 84
SoloStar Concept 84
Using the front passenger's seat and folding table 84
Folding the bunk down/up 85

Bunks in the M-cab 87
Overview of bunks in the M cab 87
Bottom standard bunk/upholstered stowage space 87
Use bottom standard bunk (partitioned) 88
Adjusting the multifunction steering wheel 88
Outside mirrors 89
Adjusts the outside mirrors 89
Activate/deactivate the mirror heater 91
MirrorCam system 91
Notes on the MirrorCam system 91
Function of the MirrorCam system 92
Operating the MirrorCam system 94
Adjusting the field of vision 95
Overview of display situations in the display 98

Exterior lighting 100
Lamp check 100
Exterior lighting menu 101
Switch the exterior lighting on/off 102
Cornering light and manoeuvring light function 106
Intelligent Light Performance function 106
Adaptive Highbeam Assist 108
Combination switch 109
Switch the illuminated Mercedes star on/off 110
Switch the rotating beacon on/off 111

Interior lighting 111
Operating the interior lighting 111

Replacing bulbs 116
Notes on changing a bulb 116
Bulbs 117
Replacing front bulbs 117
Replacing rear bulbs 123
Replacing interior lighting bulbs 124
Changing additional bulbs 124

Partially masking headlights – left-hand/right-hand traffic 126

Good visibility 129
Using the windscreen wipers 129
Using the windscreen washer system 130
Switch the windscreen heater on/off 130
Notes on winter operation 130

Power supply 130
Using the battery disconnect switch (vehicles without ADR classification) 130
Using the battery disconnect switch (vehicles with ADR classification) 131
Overview of 12 V/24 V sockets 133
Using a 12 V voltage converter 134
Using the 230 V socket 135

Practical tips 137
Using the cigarette lighter 137
Activate/deactivate the smoke detector 138
Stowage spaces and stowage compartments 139
Folding the folding table in/out 142
Notes on cup/bottle holders 143
Couple/uncouple the compressed-air connection in the cab 144

Communication 145
Notes on the audio device (radio) 145
Operate audio devices (radio) with the bed/bunk switch panel 145
Telephone 145
Using the notebook holder 148

Air conditioning 149

Notes on climate control 149

Overview of the multimedia system climate control functions 150

Cooling with air dehumidification 151

Notes on cooling with air dehumidification 151

Switching cooling with air dehumidification (air-conditioning system) on/off 151

Setting the temperature 152

Setting the air distribution/airflow 152

Demisting/defrosting the windscreen and windows 152

Switching air-recirculation mode on/off 152

Switch residual heat utilisation on/off 153

Auxiliary heating 153

Notes on auxiliary heating 153

Forced switch-off 154

Switch immediate heating mode on/off 155

Setting the switch-on time 155

Electric stationary air-conditioning system 156

Information about the stationary air conditioning system 156

Switching immediate cooling mode on/off 157

Setting the switch-on time 157

Air vents 158

Notes on air vents 158

Adjusting the air vents 158

Instrument cluster and on-board computer 160

Instrument cluster 160

Notes on the instrument cluster 160

Notes on the rev counter 160

Notes on the AdBlue® display 161

Notes on the fuel display 162

Displays 163

Engine diagnosis indicator lamp: Vehicles without BlueTec® exhaust gas aftertreatment 164

Engine diagnosis indicator lamp: BlueTec® 4 vehicles and BlueTec® 5 vehicles: 165

Engine diagnosis indicator lamp: BlueTec® 6 vehicles 166

System check after a malfunction 168

BlueTec® 6 exhaust gas aftertreatment status display 168

On-board computer 169

Notes on/overview of the on-board computer 169

Overview of menus on the on-board computer 169

Overview of warning/indicator lamps in the status area 170

Safety instructions 170

Overview 171

Voice control system 173

Notes on operating safety 173

Using the voice assistant 173

Conducting a dialogue 173

Overview of operable voice assistant functions 173

Setting voice assistant functions in the multimedia system 174

Essential voice commands 174

Notes on voice commands 174

Examples of navigation voice commands 174

Examples of telephone voice commands 174

Examples of radio voice commands 175

Examples of media voice commands 175

Examples of vehicle voice commands 175

Multimedia system 176

Overview and operation 176

Overview of the multimedia system 176

Notes on the multimedia system display 176

Home screen overview 177

Touch Control 178

Operating the touchscreen 178

Applications 179

Switch the sound on/off 179

Adjusting the volume 180

Favourites 180

Entering characters 180

System settings 182

Display 182

Time and date 182

Setting the alarm clock 183

Connectivity 183

Tachograph 184

Notes on tachographs 184

Calling up the tachograph menu 185

Overview of tachograph menu 185

Tachograph menu symbols 185

Navigation 186

Notes on navigation 186

Information on GPS reception 186

Navigation menu 186

Destination entry 187

Directions 189

Edit route 190

Route guidance 191

Traffic 193

Navigation settings 196

Telephony 199

Basic information 199

Calls 202

Contacts 204

Call list 204

Apple CarPlay® 205

Android Auto 206
Vehicle data transmitted with Apple CarPlay® and Android Auto 207
Wireless mobile phone charging 208

Radio 208
Switching on the radio 208
Radio overview 209
Setting the frequency band 209
Selecting a radio station via the presets 210
Selecting a radio station from the list of stations 210
Selecting a radio station via direct frequency input 210
Storing radio stations 210
Switching traffic announcements on and off 210

Media 210
Information about media mode 210
Bluetooth overview 212
USB overview 213
Connecting data storage media to the multimedia system 214
Starting media playback 215
Controlling media playback 215

Truck Data Centre 216

Information about Truck Data Centre 216

Information on the card reader for the Truck Data Center 216

Overview of the card reader for the Truck Data Center 216

LED indicator lamp display 216

Reading out the Fleetboard DriverCard 217

Sending messages 217

Connectivity services 218
Mercedes-Benz Trucks Uptime 218
Fleetboard 218

Mercedes-Benz Trucks Remote 3.0 App 218
Download the app to your smartphone 218
Connect the app and vehicle via QR code 219

Driving mode 220

Driver assistance/driving safety systems and your responsibility 220

Driving 220
Notes on preparing for a journey 220
Preparing for a journey 221
Information on preparation for alcohol tester with immobiliser 223
Notes on the ignition lock 223
Start the vehicle 226
Notes on automatic engine speed increase 228
Notes on automatic engine speed increase at low on-board electrical system voltage 229
Safety checks 229

Notes on pulling away 231
Notes on stopping and switching off the engine 231
Stopping and switching off the engine 233

Brakes 233
Notes on the brake system 233
Checking the compressed-air brake system for leaks 234
Notes on the trailer/semitrailer brake system 234
ABS (anti-lock braking system) 235
Function of BAS (Brake Assist System) 236
Electronic parking brake 237
Electric independent trailer brake 240
Applying and releasing the holding brake on the front axle 241
Frequent-stop brake 242
Using the hill holder 243
Using the HOLD function 244
Continuous brake 245

Manual transmission 247
Notes on the manual transmission 247
Changing gear 247
Function of the 9-speed transmission 248
Function of the 16-speed transmission 248
Changing the shift range 249

Automated manual transmission 250
Function of the multifunction lever and the gear display 250
Multifunction lever 250
Gear display 250
Drive programs and drive functions 251
Notes on pulling away and stopping (automated manual transmission) 256
Pulling away and stopping the vehicle (automated manual transmission) 257
Driving in the automatic drive program 258
Driving using the manual drive program 259

Automatic transmission 260
Overview of push-button gearshift and gear display 260
Changing drive programs 261
Driving tips 261

Operation 262
Notes on axle and wheel loads 262
Displaying axle loads and setting axle load indicator 262
Using the turbo retarder clutch 263
Using hydromove 264
Adjusting power steering 265
Using manoeuvring mode 265
Function of ASR (anti-slip control) 266
Deactivating and activating ASR 266
Function of Stability Control Assist 267
Deactivating and activating Stability Control Assist 268
Using differential locks 268
Engaging/disengaging front axle transfer case 272

Switching the off-road gear transfer case on and off 273
Notes on hydraulic auxiliary drive 273
Switching the hydraulic auxiliary drive on/off 274
Checking the oil level of the hydraulic auxiliary drive 275
Cleaning the radiator/fan of the hydraulic auxiliary drive 275

Driving systems 276
Reversing camera 276
Limiter 277
Cruise control 278
Proximity Control Assist 281
PPC (Predictive Powertrain Control) 288
Frontguard Assist 291
Active Brake Assist 6 294
Traffic Sign Assist 304
Lane Keeping Assist 307
Attention Assist 309
Sideguard Assist 2/Active Sideguard Assist 2 311
Active Drive Assist 3 321
Trailer Stability Assist 329

Level control system 330
Notes on level control 330
Activating and deactivating the level control operating unit 331
Raising or lowering the chassis with the operating unit 332
Raising or lowering the chassis using the multimedia system 333
Storing/opening the chassis height 333
Setting the driving level 334
Loading and unloading the vehicle when the vehicle is switched off 335
Special functions of the level control system 336
Using road paver mode 337
Using raised driving level (vehicles for transportation of bulk cargo) 338
Using manoeuvring level 339
Additional axles 340
Notes on starting-off aid 340
Switching starting-off aid on/off 341
Raising/lowering the leading/trailing axle 341
Using steerable additional axle 342

Driving tips 343
General driving tips 343
Using an underride guard 344
Road paver mode 345
Off-road driving 347
Economical and environmentally aware driving 353
Notes on the diesel particulate filter 355
Activating and deactivating regeneration lockout of the diesel particulate filter 356
Starting manual regeneration of the diesel particulate filter 357
Fuel consumption 358
Oil consumption 359
Limiting speed 359

Reverse warning device 359
Using the reverse gear lock on waste collection vehicles 360
Notes on the warning tone 360

Refuelling 361
Fuel and AdBlue® tank 361
Fuel 362
AdBlue® 367

Trailers/semitrailers 369
Notes on the trailer and fifth-wheel coupling 369
Coupling 372
Detaching semitrailers and uncoupling trailers 376
Cables and compressed-air lines 376
Semitrailer truck hydraulic system 380
Activating ramp approach aid 387

Wind deflector 388
Adjusting the wind deflector . . . 388
Wind deflector diagrams 389
Adjustment values for ProCabin wind deflector 394

Winter operation 396
Winter driving 396
Snow chains 398
Parts for operation at low temperatures 399

Working mode 403

Power take-off 403
Power take-off function 403
Activating/deactivating the power take-off 404
Preselecting working speed 405
Setting the idle/working speed 406
Switching emergency operation mode of the engine-driven power take-off (NMV) on/off 407

Tipper mode 409
How tipper mode works 409
Retracting/extending the tipper 410

Cleaning and care 412

Notes on cleaning the interior 412

Notes on the use of a high-pressure cleaner 414

Notes on the use of automatic car washes 414

Notes on cleaning the exterior 415

Using steps 417

Cleaning the sensors 421

Notes on washing the engine 423

Maintenance 425

Mercedes-Benz Trucks Service . . . 425

Information about Service/ maintenance work 425

Notes about engine oil change and oil filter replacement 426

Notes on the oil change intervals for the major assemblies 426

Digital maintenance documentation 426

Notes on the maintenance system 427

Open/close maintenance flap 428

Overview of maintenance points under the maintenance flap 429

Check the coolant level 430

Checking hydraulic fluid level of the clutch operation system 432

Topping up the windscreen washer system 432

Cleaning the cyclone dust pre-separator 433

Cleaning the coarse filter for heating and climate control 434

Replacing the wiper blades 435

Checking the engine oil and topping up 436

Automatic transmission oil level 437

Checking oil level of the automatic transmission 437

Overview of transmission oil level fault codes 438

Notes on the major assemblies . . . 439

Checking the anti-corrosion protection 439

Battery 439

Notes on the battery 439

Removing and fitting batteries 442

Information on maintenance and care of the battery 445

Activating transport mode 447

Checking and charging the battery 447

Notes on parking up the vehicle 449

Breakdown assistance 450

Function of telediagnostics 450

Vehicle tool kits 450

Opening/closing the tool kit compartment 450

Overview of vehicle tool kits and emergency equipment 451

Using the jack, pump lever and chock 452

Cab 453

Tilting the cab 453

Problems when tilting the cab 458

Engine 459
Starting or switching off the vehicle with the cab tilted 459
Draining and bleeding the fuel system 460
Locking the air regulation system 464
Rectifying problems starting the engine 465

Flat tyre 465
Preparing for a wheel change 465
Temporary spare wheel holder 468
Removing and fitting the wheel trim 469
Changing a wheel 472
Removing and fitting a Trilex® wheel 478
Removing and fitting a Trilex® rim with tyre 479

Electrical fuses 481
Remove the main fuse carrier cover 481
Fuse assignment diagram 482
Checking safety fuses and the automatic circuit breaker 487

Information on the compressed-air system 488

Jump-starting, tow-starting and towing away 490
Performing a jump start 490
Notes on tow-starting/towing away 492
Manoeuvring and tow-starting/towing away 494
Spring-loaded brake 497

Wheels and tyres 499

Operating and road safety 499
General notes on wheels and tyres 499
Notes on replacing tyres and retreaded tyres 499
Notes on wheels with tyre pressure sensors 500

Notes on sound changes or undesired handling characteristics 501

Notes on regularly inspecting wheels and tyres 502

Determining tyre pressure 504

Tyre pressure table for single tyres 505

Tyre pressure table for twin tyres 512

Technical data 518

Engine identification plate 518

Vehicle identification plate/axle loads 518
Vehicle identification plate and Vehicle Identification Number (VIN) 518
Vehicle identification plate 518

Radio regulations 519
Wireless vehicle components 519

Operating fluids 527
Notes on operating fluids 527
Notes on engine oils 527
Transmission oils 529
Notes on coolant 530
Notes on refrigerant 531
Notes on fuel grade 531
Information on diesel fuels in accordance with EN 590 532
Information about alternative diesel fuels in accordance with DIN EN 15940 535
Notes on AdBlue® 535

Operating data 537
Compressed-air system 537
Engine 537
Tyre pressure 538
Wheel nut tightening torques 539
Spring-loaded brake cylinder release torque/release pressure 539
Level control system 539
Compressed-air reservoir 539
Information on the compressed-air reservoir 539
Compressed-air reservoir identification plate 540

Display messages 541

Notes on display messages 541

BlueTec® exhaust gas aftertreatment/diesel particulate filter 542

Trailers/semitrailers 546

Lighting system 551

Operating fluids and maintenance 552

Brakes 553

Compressed-air system 557

Vehicle and electrical system 559

Driving systems and steering 563

Transmission and clutch 574

Engine and cooling 579

Tyres 583

Key 588

Confirmations 590

Vehicle data 590

Index 596

Use and meaning of symbols

Safety instructions and other important information are specially marked with symbols.

In addition to the notes listed in the content, the safety and accident prevention regulations of the professional associations must also be observed.

Generally, even when complying with instructions, it is assumed that the user information is intended only for individuals who, due to their education, experience, and training, are qualified to perform the required tasks.

At the same time, these persons must be able to identify and avoid hazards that may occur during the performance of their activities.

Useful information

Additional information is identified as follows:

	Note

Factual and environmental information

Identification of damage, possible consequences and instructions for avoidance.

	Material damage
	Environmental damage

Warning notices

Identification of hazards, possible consequences, and instructions for avoidance.

	DANGER. Warns of danger to persons with potential consequences of serious injury or death.
	WARNING. Warns of danger to persons with potential consequences of injury.

Symbols and structuring tools

Text identifiers

▶	Instructions
Display	Messages on the display of the instrument cluster
◁	Expected system response after an action
▽	Unexpected system response after an action
●	List in any order
→	Further information on a topic
↳	Highest menu level to be selected in the multimedia system
⏩	Corresponding submenus to be selected in the multimedia system

Environmental protection

Note

Environmental damage due to operating conditions and personal driving style

The pollutant emission of the vehicle is directly related to the way you operate the vehicle.

- Operate your vehicle in an environmentally responsible manner to help protect the environment.
- Please observe the following recommendations on operating conditions and personal driving style.

Recommendations regarding operating conditions

- Avoid driving short distances.
- Make sure that the tyre pressure is correct.
- Do not carry any unnecessary weight.
- Adhere to the service intervals.

Note

A regularly serviced vehicle will contribute to environmental protection.

- Always have maintenance work carried out at a qualified specialist workshop.

Driving recommendations

- Do not depress the accelerator pedal when starting the engine.
- Do not warm up the vehicle while stationary.
- Drive carefully and maintain a suitable distance from the vehicle in front.
- Avoid frequent, sudden acceleration and braking.
- Change gear in good time and use each gear only up to $^{2}/_{3}$ of its maximum engine speed.
- Switch the vehicle off during periods spent in traffic-related delays.
- Drive in a fuel-efficient manner. For a fuel-efficient driving style, drive in the green rpm range.

Information on device batteries

Information on device batteries is available at the following URL:

https://manuals.daimlertruck.com/truckownermanuals/conformity

Mercedes-Benz Genuine Parts

Note

Environmental damage caused by not using recycled, reconditioned components

Daimler Truck°AG offers recycled and reconditioned components and parts having the same quality as new parts. The same entitlement from the implied warranty is valid as for new parts.

- Use recycled reconditioned components and parts from Daimler Truck°AG.

Danger

Risk of accident if unapproved parts are used

If you use parts, tyres, wheels, or safety-critical accessories that have not been approved by Daimler Truck°AG, the operating safety of the vehicle may be jeopardised. Safety-relevant systems, e.g. the brake system, may malfunction.

- ► Only use Mercedes-Benz Genuine Parts or equivalent quality.
- ► Only use tyres, wheels and accessories that are approved for your vehicle model.

Daimler Truck°AG tests Genuine Parts and conversion parts and accessories that have been specifically approved for your vehicle model for their reliability, safety, and suitability. Despite ongoing market research, Daimler Truck AG is unable to assess other parts. Daimler Truck°AG therefore accepts no responsibility for the use of such parts in Mercedes-Benz trucks, even if they have been independently or officially approved by a technical testing centre.

Certain parts are only officially approved for installation or modification if they comply with legal requirements. All Mercedes-Benz Genuine Parts meet the approval requirements. The use of non-approved parts may invalidate the vehicle's general operating permit.

This is the case in the following situations:

- The vehicle type is different from that for which the vehicle's general operating permit was granted.
- Other road users may be endangered.
- The exhaust gas or noise levels are adversely affected.

- ► Always specify the Vehicle Identification Number (VIN) when ordering Mercedes-Benz Genuine Parts (→ Page 518).

Information about attachments, add-on equipment, installations and conversions

Information on body/equipment mounting directives

For safety reasons, have bodies produced and fitted in accordance with applicable Mercedes-Benz Trucks body/equipment mounting directives.

These body/equipment mounting directives ensure that the chassis and add-on equipment form one unit and that the greatest possible level of operational and driving safety is achieved.

For safety reasons, Daimler Truck AG recommends the following:

- ► Do not make any other modifications to the vehicle.
- ► Obtain approval from Daimler Truck AG in the event of deviations from the approved body/equipment mounting directives.

Information about attachments, add-on equipment, installations and conversions

Acceptance tests performed by public test bodies or official approvals do not rule out safety risks.

Read the information on Mercedes-Benz Genuine Parts (→ Page 2).

You can find the Mercedes-Benz Trucks body/equipment mounting directives online:

https://bb-portal.mercedes-benz-trucks.com/de/GLOBAL

You can also find information on PIN assignment and changing fuses there.

Note

Further information can be obtained at a qualified specialist workshop.

Danger

Risk of accident and injury due to improper vehicle conversions of modifications

Conversions or modifications to the vehicle may cause systems or components to no longer function as intended and/or jeopardise the operating safety of the vehicle.

- Always have conversions or modifications to the vehicle carried out at a qualified specialist workshop.

Information on Custom Tailored Trucks (CTT)

Mercedes-Benz CTT (Custom Tailored Trucks) offers tailor-made solutions that are customised to meet your individual requirements as well as the high quality standards of Mercedes-Benz Trucks.

If you own a vehicle with a CTT equipment code, you can find detailed user information for your CTT conversions using the following link.

Mercedes-Benz Truck Guides:
https://manuals.daimlertruck.com/truckownermanuals

Notes on cameras and sensors

If cameras, sensors and their detection ranges are covered or their covers are damaged, sensors, cameras or driving and safety systems may malfunction or fail.

Observe the following notes on cameras and sensors, especially distance sensors and radar sensors:

- Do not install implements or accessories in front of the camera or the sensor, e.g. bullbars or advertising.
- Do not paint or cover cameras and sensors, e.g. by decals or foils.
- The load or the load safety equipment must not protrude into the detection range of the cameras and sensors.
- Have damage to the sensor cover or around the camera repaired immediately at a qualified specialist workshop.

Information about the radiator

Even seemingly minor changes to the vehicle, such as attaching a radiator grille in winter operation, are not permitted.

Observe the following information on the engine radiator:

- Do not cover the engine radiator.
- Do not use thermo mats, insect screens or similar.

Otherwise, the values produced by the diagnostic system will be distorted. Depending on country-specific laws and requirements, the recording of engine diagnostics data may be legally mandated. This data must be reproducible and correct at all times.

Operator's Manual

These operating instructions describe all possible models as well as the standard and special equipment of your vehicle. Note that your vehicle may not be fitted with all features described. This is also the case for safety-relevant systems and functions. Therefore, the equipment on your vehicle may differ from that in some descriptions and illustrations.

The original purchase agreement for your vehicle contains a list of all of the systems in your vehicle.

Contact an authorised Mercedes-Benz Trucks Service Centre if you have any questions about equipment or operation.

The operating instructions and service booklet are important documents and should be kept in the vehicle.

Operating safety

Danger

Risk of accident due to malfunctions or system failure

If you do not have the prescribed service/maintenance work or any required repairs carried out, this may result in malfunctions or system failures.

- Always have the prescribed service and maintenance work, as well any required repairs, carried out at a qualified specialist workshop.

Danger

Risk of accident or injury due to incorrect modifications to electronic component parts

Carrying out modifications to electronic components, their software, or wiring, may impair their function and/or the function of other interconnected components or safety-relevant systems.

This may jeopardise the operating safety of the vehicle.

- Do not tamper with the wiring and electronic component parts or their software.
- Always have work on electrical and electronic devices carried out at a qualified specialist workshop.

Note

System malfunctions due to tampering with or improperly retrofitted radio equipment

Electromagnetic radiation from two-way radios can interfere with the onboard electronics if the two-way radios are manipulated or retrofitted incorrectly.

This may jeopardise the operating safety of the vehicle.

- Always have work on electrical and electronic devices carried out at a qualified specialist workshop.

If you make any changes to the onboard electronics, the general operating permit is rendered invalid.

Danger

Risk of fire due to flammable material coming into contact with hot parts of the exhaust system

Flammable material such as leaves, grass or twigs may ignite if they come into contact with hot parts of the exhaust system.

- When driving off-road or on unpaved surfaces, check the underside of the vehicle at regular intervals.
- In particular, remove any trapped parts of plants or other flammable material.
- If damage should occur, immediately inform a qualified workshop.

Note

Damage to the vehicle as a result of driving too fast and following impacts to the vehicle underbody or suspension components

In the following situations, in particular, there is a risk of damage to the vehicle:

- The vehicle bottoms out, e.g. on a high kerb or unpaved surfaces.
- The vehicle is driven too fast over an obstacle, e.g. a kerb, speed bumps or a pothole.
- A heavy object strikes the underbody or suspension components.

In situations such as these, damage to the body, underbody, suspension components, wheels or tyres may not be visible. Components damaged in this way can unexpectedly fail or, in the case of an accident, may not absorb the resulting force as intended.

If the underbody panelling is damaged, flammable materials, such as leaves, grass or twigs could collect between the underbody and underbody panelling. These materials could ignite if they come into contact with hot components of the exhaust system.

- If driving safety is impaired while continuing your journey, pull over and stop the vehicle as soon as possible, while paying attention to road and traffic conditions, and contact a qualified specialist workshop.
- Have the vehicle checked and repaired as soon as possible at a qualified specialist workshop.

Declarations of Conformity and National Notes

Electromagnetic compatibility

The electromagnetic compatibility of the vehicle components has been checked and certified according to the currently valid version of Directive UN-R°10.

Jack

EU and EFTA countries only:

Copy and translation of the original declaration of conformity:

EC Declaration of Conformity 2006/42/EG

We, WEBER-HYDRAULIK GMBH, Heilbronner Str. 30, 74363 Güglingen, declare that the product “Weber Hydraulic Jack”

types

- A 5-212
- AD 5-217
- AD 10-220
- AD 12-270
- ADX 10-370
- AH 25-240
- ATN 10-175
- ATPX 12-190
- ATPX 12-230
- ATPX 16-240
- ATQ 12-230

Capacity: 2,000 to 100,000 kg

Serial no.: as of year of manufacture 01/2010

complies with the relevant essential health and safety requirements of the EC Machinery Directive.

This EC declaration of conformity becomes invalid:

- In the event of modifications or repairs performed by an unqualified person,
- if the products are not used in accordance with the application specified in the operating instructions.
- if the required regular checks are not performed.

Relevant EC directives: EC Machinery Directive 2006/42/EG

Applied standards: ISO 11530:1993

EN ISO 12100:2010

Quality assurance: DIN EN ISO 9001:2000

Güglingen, 15 December 2021

Signed by the Managing Director (CEO), WEBER-HYDRAULIK GmbH

Executive officer for technical documentation WEBER-HYDRAULIK GMBH

Heilbronner Straße 30, 74363 Güglingen

For the United Kingdom only:

Copy and translation of the original declaration of conformity:

UKCA declaration of conformity

We, WEBER-HYDRAULIK GMBH, Heilbronner Str. 30, 74363 Güglingen, declare that the product “Weber Hydraulic Jack”

types

- A
- AD
- ADX
- AH
- AHX

- AL
- AT
- ATD
- ATDX
- ATG
- ATN
- ATGX
- ATPX
- ATQ
- AX

Capacity: 2,000 to 100,000 kg

Serial no.: From year of manufacture 01/2022

complies with the relevant essential health and safety requirements of the Supply of Machinery (Safety) Regulation 2008.

This UKCA declaration of conformity becomes invalid:

- In the event of modifications or repairs performed by an unqualified person,
- if the products are not used according to the operating instructions,
- if the required regular checks are not performed.

Relevant UK guidelines:

Supply of Machinery /Regulations 2008

Applied standards: ISO 11530:1993

BS EN ISO 12100:2010-12-31

Safety of Machinery

General principles for design

Risk assessment and risk reduction

Güglingen, 01/02/2022

Signed by the Managing Director (CEO), WEBER-HYDRAULIK GmbH

Executive officer for technical documentation WEBER-HYDRAULIK GMBH

Heilbronner Straße 30, 74363 Güglingen

Diagnostics connection

The diagnostics connection is a technical interface in the vehicle. It is used, for example, in the context of repair and maintenance work or for reading out vehicle data by a specialist workshop. Diagnostic devices should therefore only be connected at a qualified specialist workshop.

Danger

Risk of accident due to connecting devices to the diagnostics connection

If you connect devices to the vehicle's diagnostics connection, the operation of vehicle systems and operating safety may be impaired.

- ▶ For safety reasons, we recommend that you only use and connect products approved by an authorised Mercedes-Benz Trucks Service Centre.

Note

Battery discharging from using devices connected to the diagnostics connection

Using devices at the diagnostics connection drains the battery.

- ▶ Check the state of charge of the battery.

- ► Charge the battery if the state of charge is low.

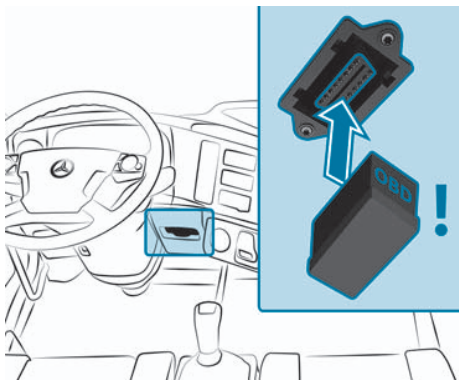

The connection to and use of another device at the diagnostics connection can have the following consequences:

- Malfunctions in the vehicle systems
- Permanent damage to the vehicle components

In addition, connecting equipment to the diagnostics connection can lead to emissions monitoring information being reset, for example. This may lead to the vehicle failing to meet the requirements of the next emissions inspection during the main inspection.

Notes on changes to the engine output

Output increases can have the following effects:

- Change in emission values
- Malfunctions
- Consequential damage

The operating safety of the vehicle is not guaranteed in all situations.

The following must be observed after an output increase:

- ► Tyres, suspension, brake system and engine cooling system must be adapted to the increased engine power.
- ► Have the vehicle recertified.
- ► Report the change in output to the insurer.

This will otherwise lead to the invalidation of the vehicle’s general operating permit and its insurance coverage.

If the vehicle is sold, the buyer must be informed of the changed engine power of the vehicle. If you fail to inform the buyer, this may constitute a punishable offence under national law.

Qualified specialist workshop

Note

Damage to the engine electronics due to improper intervention

Intervening in the engine electronics may damage vehicle parts and the vehicle's general operating permit may be invalidated.

- ► Only have the engine electronics and the affected parts serviced at a qualified specialist workshop.

A qualified specialist workshop has the necessary special skills, tools, and qualifications to carry out the necessary work on the vehicle professionally. This particularly applies to work relating to safety.

Vehicle registration

Always have the following work on the vehicle carried out at a qualified specialist workshop:

- Work related to safety
- Service and maintenance work
- Repair work
- Modifications, installations and conversions
- Work on electronic components

Daimler Truck AG recommends that you use an authorised Mercedes-Benz Trucks Service Centre for this purpose.

Vehicle registration

Daimler Truck°AG may ask its authorised service centres to carry out technical inspections on certain vehicles. Inspections improve the quality or safety of the vehicles.

Daimler Truck°AG can only inform you about vehicle checks if it has your registration data.

In the following cases your vehicle may not be registered to you yet:

- if your vehicle was not purchased at an authorised specialist dealer.
- if your vehicle has not yet been examined at an authorised Mercedes-Benz Trucks Service Centre.

► We recommend you register your vehicle with an authorised Mercedes-Benz Trucks Service Centre.

► Inform Daimler Truck°AG as soon as possible about any change in address or vehicle ownership. You can do this, for example, at a Mercedes-Benz Trucks Service Centre.

Correct use of the vehicle

If you remove any warning stickers, you or others could fail to recognise certain dangers.

► Leave warning labels in place.

The following information in particular must be taken into account when using the vehicle:

- The safety notes in this manual
- Technical data of the vehicle
- Traffic rules and regulations
- Laws and safety standards pertaining to motor vehicles

Information on the REACH regulation

EU and EFTA countries only:

The REACH regulation (Regulation (EC) no. 1907/2006, Article 33) includes the obligation to provide information regarding Substances of Very High Concern (SVHC).

Daimler Truck°AG acts in all conscience to avoid the use and application of these SVHCs and to enable the customer to handle these substances safely. According to supplier information and Daimler Truck°AG's internal product information, there are SVHCs with more than 0.1°percent by weight found in some elements of this vehicle.

More detailed information can be found at the following websites:

https://reach.daimlertruck.com/de

https://reach.daimlertruck.com/en

Notes for persons with electronic medical aids

In addition, there are components installed in the vehicle that, regardless of the operating status of the vehicle, can generate magnetic fields on a par with permanent magnets. These fields can be found, for example, in the area around the multimedia or sound system or also in the area of the seats, depending on the vehicle equipment.

For this reason, the following can occur in isolated cases, depending on the aids used:

- Medical aids malfunctioning
- Adverse health effects

Only have repairs and maintenance work in the area of the following components carried out by a qualified specialist workshop:

- Vehicle components carrying live voltage
- Transmission aerials
- Multimedia system and sound system

► Contact a qualified specialist workshop if you have any questions.

Liability for material defects

Warranty claims for material defects for new vehicles

Warranty claims on new vehicles, the scope of which is based on the purchase agreement and the applicable general terms and conditions, can be filed with any authorised Mercedes-Benz service partner.

Note

Damage to the vehicle arising from violation of these operating instructions

Damage to the vehicle can arise from violation of these operating instructions. Such damage is not covered by the material defect liability warranty.

► Follow the instructions in these operating instructions on proper operation of your vehicle as well as on possible vehicle damage.

Information on the material defects warranty

In accordance with the purchase agreement, the engine assemblies, transmission, propeller shaft(s) and drive axle(s) installed in a lorry at the factory are subject to extended limitation periods within the distance covered limits specified therein.

This includes the following assembly component parts installed in the vehicle:

- **Engine:** engine block, drivetrain, control, diesel injection system, exhaust gas turbocharger, compressor, intake/exhaust manifold, engine brake, coolant pump, fan, alternator, starter
- **Transmission:** transmission housing, shafts, wheels, bearing, power take-off, splitter box, range group
- **Shaft train:** propeller shaft, propeller shaft intermediate bearing
- **Drive axles:** axle housing, drive shaft, drive, compensation, differential lock, planetary hub reduction drive, axle through drive
- **Retarder:** electrical and hydraulic retarder

Please observe the instructions in this maintenance booklet, even if you allow a third party to use and maintain the vehicle. This is the only way to ensure that you retain your warranty rights.

Have the prescribed service work and maintenance work for your vehicle, in particular during the implied warranty period, carried out as follows:

- regularly
- in good time
- at a qualified specialist workshop that has the necessary special skills and tools to carry out the work required

  Information on qualified specialist workshop (→ Page 9).

If the prescribed service and maintenance work is not carried out, the decision as to whether a warranty claim can be accepted or not can be made only after the manufacturer has submitted a report on the damaged part. If emission control systems are required by law, the engine must be serviced according to particular specifications using appropriate measuring equipment. Modifications to or tampering with exhaust system components is prohibited.

Information on digital maintenance documentation (→ Page 426).

Vehicles without digital maintenance documentation: The maintenance booklet confirms that all service and maintenance work has been carried out at a qualified specialist workshop.

Maintenance jobs do not include repair work. A separate order must be placed for such work.

Data storage

Data processing in the vehicle

Electronic control units

Electronic control units are fitted in your vehicle. Control units process data that they receive from vehicle sensors, for example, generate themselves or exchange with each other. Some control units are required for the safe operation of your vehicle, some assist you when driving (such as driver assistance systems), while others enable convenience or infotainment functions.

The following provides you with general information regarding data processing in the vehicle. Additional information regarding exactly which data in your vehicle is collected, saved, and transmitted to

third parties, and for what purpose, can be found in the information directly related to the functional characteristics in question in their respective operating instructions. This information is also available online and, depending on the vehicle equipment, digitally.

You can find data protection information regarding how Daimler Truck AG collects and uses personal data from the vehicle under the ”Data protection information" heading (→ Page 16) in these operating instructions.

Personal data

Every vehicle is identified by a unique vehicle identification number. Depending on the country, this vehicle identification number can be used by, for example, governmental authorities to determine the identity of the owner. There are other possibilities for using data collected from the vehicle to identify the owner or driver, such as the licence plate number.

Therefore, data generated or processed by control units may be attributable to a person or, under certain conditions, become attributable to a person. Depending on which vehicle data is available, it may be possible to make inferences about, for example, your driving behaviour, your location, your route or your use patterns.

Legal requirements regarding the disclosure of data

If legally required to do so, manufacturers are, in individual cases, legally obliged to provide governmental entities, upon request and to the extent required, data stored by the manufacturer. For example, this may be the case during the investigation of a criminal offence.

Governmental entities are themselves, in individual cases and within the applicable legal framework, authorised to read out data from the vehicle. In the case of an accident, information that could help with an investigation can, therefore, be read out from the airbag control unit, for example.

Operational data in the vehicle

This is data regarding the operation of the vehicle, which has been processed by control units.

This includes the following data, for example:

- vehicle status information such as the speed, longitudinal acceleration, lateral acceleration, number of wheel revolutions, or the fastened seat belts display
- ambient conditions, such as temperature, or data from the rain sensor or distance sensor

Generally, the use of these data is temporary; it will not be stored beyond the period of operation and will only be processed within the vehicle itself. Control units, such as vehicle keys, often contain data memories. Their use permits the temporary or permanent documentation of technical information about the vehicle's operating state, component loads, maintenance requirements, and technical events or faults.

Data storage

Depending on the technical equipment, the following data is stored:

- operating status of system components, such as fill levels, tyre pressures, or battery statuses
- malfunctions or faults in important system components, such as lights or brakes
- system reactions in special driving situations, such as airbag deployment or the intervention of stability control systems
- Information on events leading to vehicle damage
- State of charge of the high-voltage battery, estimated range

In certain cases, it may be required to store data that would have otherwise been used only temporarily. This may be the case if the vehicle has detected a malfunction, for example.

If you use services, such as repair services and maintenance work, stored operational data as well as the vehicle identification number can be read out and used, if necessary. They can be read out by service network employees, such as workshops and manufacturers, or third parties, such as breakdown services. The same is true in the case of warranty claims and quality assurance measures.

In general, the read-out is performed via the legally prescribed port for the diagnostics connection in the vehicle. The operational data that is read out documents the technical states of the vehicle or individual components, and assist in the diagnosis of malfunctions as well as compliance with warranty obligations and quality improvement. To that end, this data, in particular information about component loads, technical events, malfunctions, and other faults, may be transmitted along with the vehicle identification number to the manufacturer. Furthermore, the manufacturer is subject to product liability. For this reason, the manufacturer also uses operational data from the vehicle, such as for recalls. This data can also be used to examine the customer's warranty claims.

Fault memories in the vehicle can be reset by a service outlet or, at your request, as part of repair or maintenance work.

Convenience and infotainment functions

You can store convenience settings and individual settings in the vehicle and change or reset them at any time.

Depending on the vehicle equipment, this includes the following settings, for example:

- Seat and steering wheel positions
- Suspension and climate control settings
- individual settings, such as interior lighting

Depending on the selected equipment, you can import data into vehicle infotainment functions yourself.

Depending on the vehicle equipment, this includes the following data, for example:

- Multimedia data, such as music, films or photos for playback in an integrated multimedia system

- Address book data for use in an integrated hands-free system or an integrated navigation system
- Entered navigation destinations
- Data on the use of Internet services

This data for convenience and infotainment functions may be saved locally in the vehicle or they may be located on a device that you have connected to the vehicle, such as a smartphone, USB flash drive or an MP3 player. If you have entered this data yourself, you can delete it at any time.

This data is transmitted from the vehicle to third parties only at your request. This applies, in particular, when you use online services in accordance with the settings that you have selected.

Smartphone integration (e.g. Android Auto or Apple CarPlay®)

If your vehicle is accordingly equipped, you can connect your smartphone or another mobile end device to the vehicle. You can then control them by means of the controls integrated in the vehicle. Images and audio from the smartphone can be output via the multimedia system. Certain information is simultaneously transferred to your smartphone. Depending on the type of integration, this includes position data, day/night mode, and other general vehicle statuses. For more information, please consult the vehicle/infotainment system operating instructions.

This integration allows the use of selected smartphone apps, such as navigation or music player apps. There is no further interaction between the smartphone and the vehicle; in particular, vehicle data is not directly accessible.

The type of additional data processing is determined by the provider of the app being used. Which settings you can make, if any, depend on the specific app and the operating system of your smartphone.

Information on service providers

Wireless network connection

If your vehicle has a wireless network connection, it enables data to be exchanged between your vehicle and additional systems. The wireless network connection is made possible by the vehicle's own transceiver or by a mobile end device that you have brought into the vehicle, for example, a smartphone. Online functions can be used via the wireless network connection. This includes online services and applications/apps provided to you by the manufacturer or by other providers.

Manufacturer's services

Regarding the manufacturer's online services, the individual functions are described by the manufacturer in a suitable place, for example, in the operating instructions or on the manufacturer's website.

You can have services and functions, some of which are subject to a fee, activated or deactivated. This excludes legally

prescribed functions and services, such as an emergency call system.

At a workshop, for example, with the support of a specialist and possibly for a fee, you can have data read out which is only stored locally in the vehicle.

Third party services

If you use online services from other providers (third parties), these services are the responsibility of the provider in question and subject to that provider's data protection conditions and terms of use. As a general rule, the manufacturer has no influence on the content exchanged.

You can obtain information about the type, scope, and purpose of the collection, as well as the use of personal data as part of third-party services from the respective service provider.

Data protection information

Daimler Truck°AG offers various digital services for its vehicles and works relentlessly to further develop its products, services, and processes, improving their quality and adapting them to customers' needs.

Daimler Truck°AG processes vehicle data for these purposes. While vehicle data constitutes technical information, it can to a certain extent be traced back to the keeper or driver of a vehicle. For this reason, it falls under the scope of data protection legislation. However, it can sometimes identify the owner or driver of a vehicle and is therefore subject to data protection legislation.

Further information in accordance with Art. 13 & 14 of the EU General Data Protection Regulation on how Daimler Truck°AG collects and uses personal data for the aforementioned purposes can be found online at:

https://www.mercedes-benz-trucks.com/gdpr-vehicle-user

Copyright

Information on licences for free and open-source software used in your vehicle, along with updates, is available online at:

https://manuals.daimlertruck.com/truckownermanuals/conformity

Cockpit

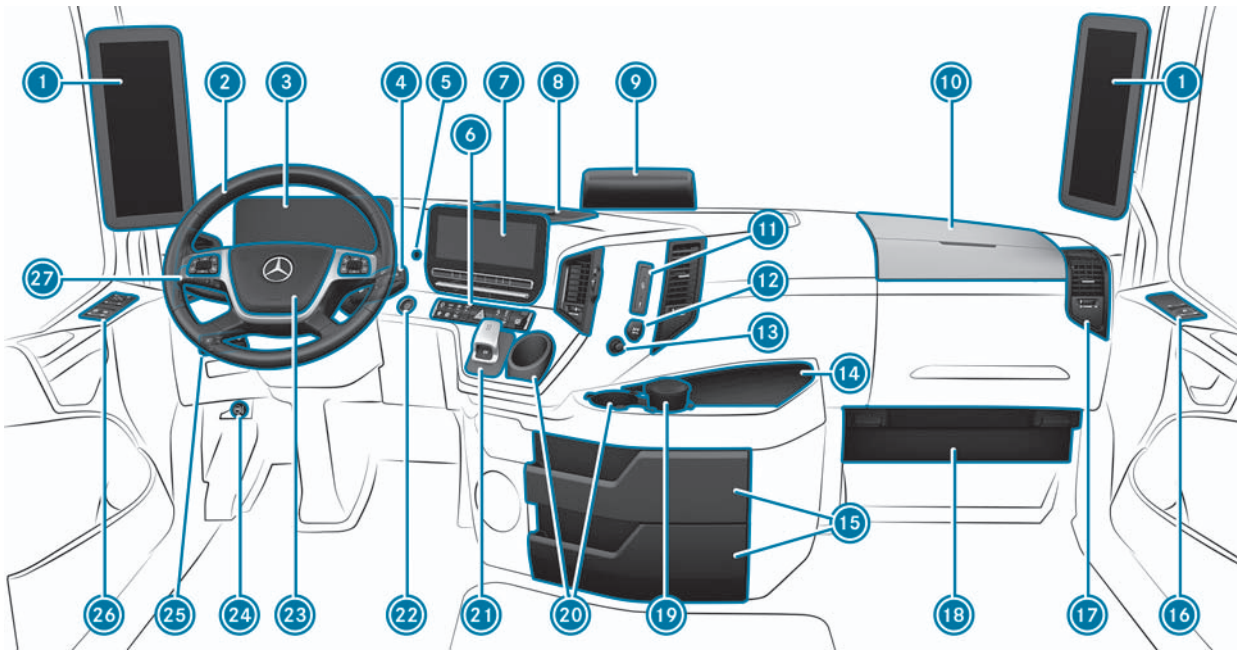

Overview (example using a left-hand drive vehicle)

Cockpit

Item	Description	Page
1	Mirror camera system display	91
2	Multifunction steering wheel	
3	Instrument cluster	160
4	Multifunction lever	250
5	Microphone (depending on equipment)	
6	Switch panel	
7	Multimedia system display	176
8	Telephone holder	146
9	Sensors/camera driver assistance systems	421
10	Folding table	142
11	USB port	214
12	Power socket (example)	133
13	Cigarette lighter	137
14	Stowage space/climbing aid for the top bunk	78
15	Drawer/stowage compartment/stowage compartment	139
16	Front-passenger's door switch panel	
17	Air vent	158

Item	Description	Page
18	Main fuse carrier cover	481
19	Ashtray	
20	Cup holder	143
21	Electronic parking brake	237
	Trailer Stability Assist (TSA)	329
	Electric anti-jackknife brake	
22	Ignition lock/start/stop button	223
23	Horn (compressed-air/signal horn)	
24	Adjusting the multifunction steering wheel	88
25	Switch panel	
26	Driver's door switch panel	
27	Combination switch	109

Overhead control panel

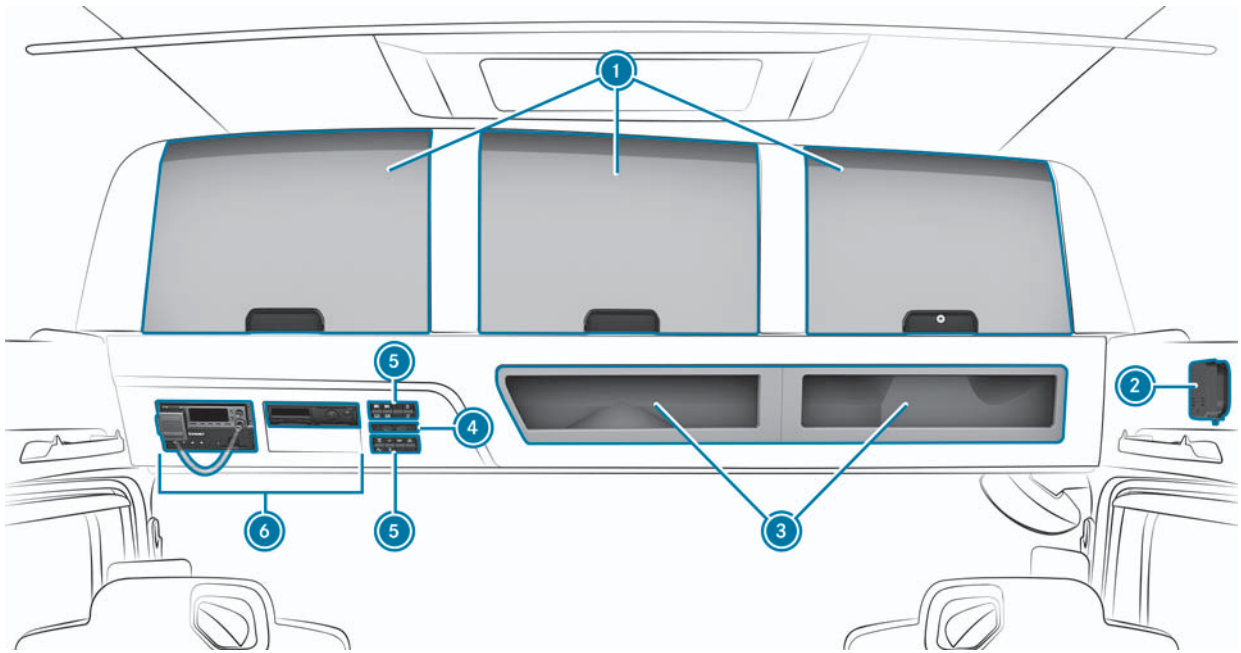

Overview (example using a left-hand drive vehicle)

Overhead control panel

Item	Description	Page
1	Drawer/stowage compartment/stowage compartment	139
2	Smoke detector	138
3	Drawer/stowage compartment/stowage compartment	139
4	Microphones for telephony and voice control (depending on equipment)	
5	Switch panel	
	Roller sunblind Retract	71
	Roller sunblind Extend	71
	Illuminated Mercedes star	110
	Operating the interior lighting Driver's reading lamp	111
	Operating the interior lighting Night lighting	111
	Operating the interior lighting Interior lamps	111

Item	Description	Page
	Operating the interior lighting Automatic interior lighting control	111
	Sliding sunroof/pop-up roof Open	65
	Sliding sunroof/pop-up roof Close	65
	Rotating beacon	111
6	DIN slots for: Two-way radio (see separate operating instructions) Digital tachograph (see separate operating instructions)	

Instrument cluster

Multimedia cockpit displays

(example: Classic design)

Instrument cluster

Item	Description	Page
1	Speedometer	
2	Messages on the display Time	163
3	Messages on the display Outside temperature	163
4	Rev counter	160
5	Multifunction lever Selected gear, selected driving program	250
6	AdBlue® level (Vehicles with BlueTEC® exhaust gas aftertreatment)	161
7	Menu display section	169
8	Fuel level	162

Multimedia cockpit displays

(example: Advanced Design)

Instrument cluster

Item	Description	Page
1	Messages on the display Time	163
2	Speedometer	
3	Rev counter	160
4	Messages on the display Outside temperature	163
5	AdBlue® level (Vehicles with BlueTEC® exhaust gas aftertreatment)	161
6	Multifunction lever Selected gear, selected driving program	250
7	Fuel level	162

Multimedia cockpit warning/indicator lamps

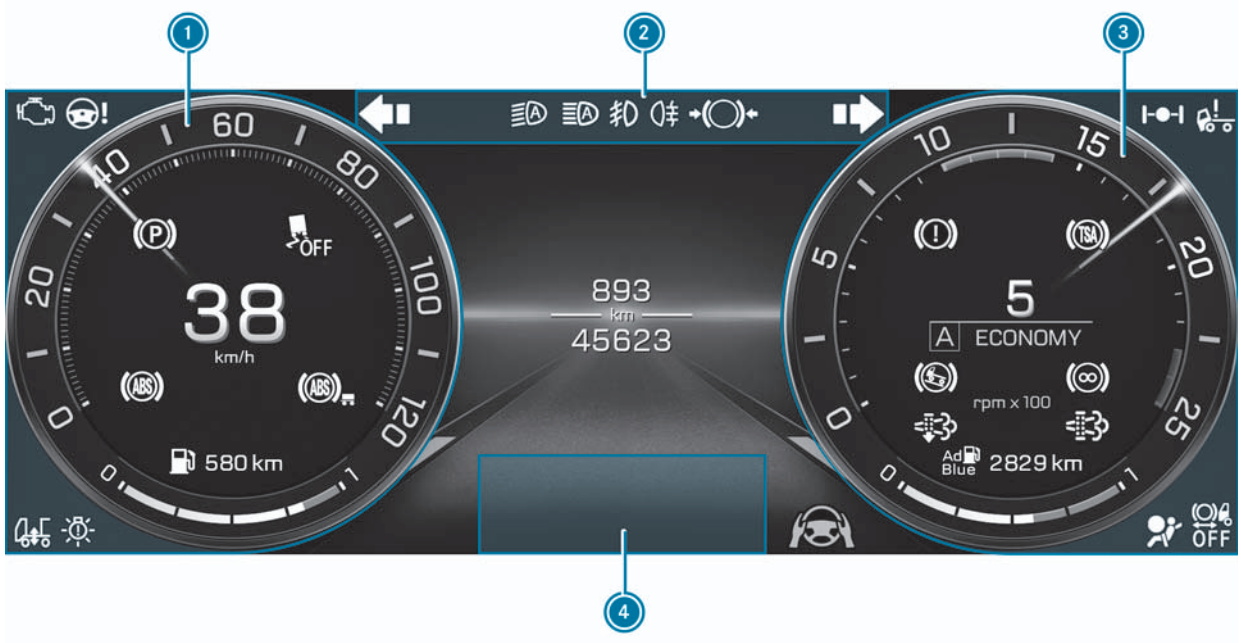

(example: Classic design)

Instrument cluster

Item	Description	Page
1	Warning/indicator lamps, left	
	ASR (acceleration skid control system) Control intervention	266
	Stability Control Assist Control intervention	267
	ASR (acceleration skid control system) switched off	266
	Stability Control Assist switched off	268
	ASR (acceleration skid control system)	266
	Engine diagnostics	164
	Electronic parking brake	238
	ABS (anti-lock braking system)	235
	ABS (anti-lock braking system) Trailers/semitrailers	235
	Level control/driving level Outside driving height	330
	Lamp check	100
2	Warning/indicator lamps, top	

Item	Description	Page
	Turn signal indicators Left	110
	Turn signal indicators Right	110
	Parking lights	
	Exterior lighting Dipped beam	102
	Exterior lighting Dipped beam (automatic)	102
	Combination switch Main beam	109
	Adaptive Highbeam Assist	108
	Exterior lighting Fog light	102
	Exterior lighting Rear fog light	102
	Steerable additional axle malfunction or power steering malfunction; see display message	565
	Instruction to brake at high engine speeds	
3	Warning/indicator lamps right	
	Using differential locks	268
	Cab tilt lock	453

Item	Description	Page
	Brake malfunction	229
	Trailer Stability Assist (TSA)	329
	Hill holder	243
HOLD	HOLD function	244
	Continuous brake	245
	Diesel particulate filter Regeneration	357
	Diesel particulate filter Malfunction or regeneration lockout	356
	Active Brake Assist switched off	294
	Active Drive Assist	321
4	Warning/indicator lamps in the status area	170

Interactive multimedia cockpit warning/indicator lamps

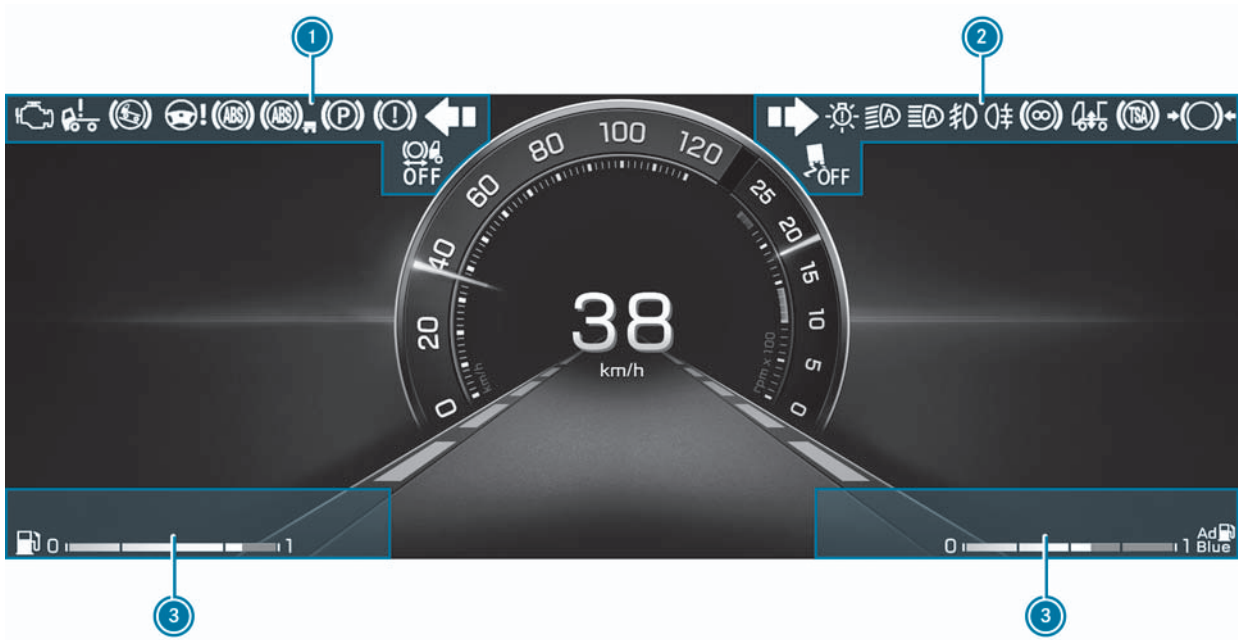

(example: Advanced Design)

Instrument cluster

Item	Description	Page
1	Warning/indicator lamps top/left	
	Engine diagnostics	164
	Cab tilt lock	453
	Steerable additional axle malfunction or power steering malfunction; see display message	565
	ABS (anti-lock braking system) Trailers/semitrailers	235
	ABS (anti-lock braking system)	235
	Hill holder	243
HOLD	HOLD function	244
	Electronic parking brake	238
	Brake malfunction	229
	Turn signal indicators Left	110
	Active Brake Assist	294
2	Warning/indicator lamps top/right	
	Turn signal indicators Right	110
	Lamp check	100

Item	Description	Page
	Parking lights	
	Exterior lighting Dipped beam	102
	Exterior lighting Dipped beam (automatic)	102
	Combination switch Main beam	109
	Adaptive Highbeam Assist	108
	Exterior lighting Front fog lamps	102
	Exterior lighting Rear fog light	102
	ASR (acceleration skid control system) Control intervention	266
	Stability Control Assist Control intervention	267
	ASR (acceleration skid control system) switched off	266
	Stability Control Assist switched off	268
	ASR (acceleration skid control system)	266
	Level control/driving level Outside driving height	330

Item	Description	Page
	Trailer Stability Assist (TSA)	329
	Instruction to brake at high engine speeds	
	Continuous brake	245
3	Warning/indicator lamps in the status area	
	Using differential locks	268
	Active Drive Assist	321
	Diesel particulate filter Regeneration	357
	Diesel particulate filter Malfunction or regeneration lockout	356
	Other indicator lamps in the status area	170

Switch panels

Switch panels in the cockpit

Driver cockpit

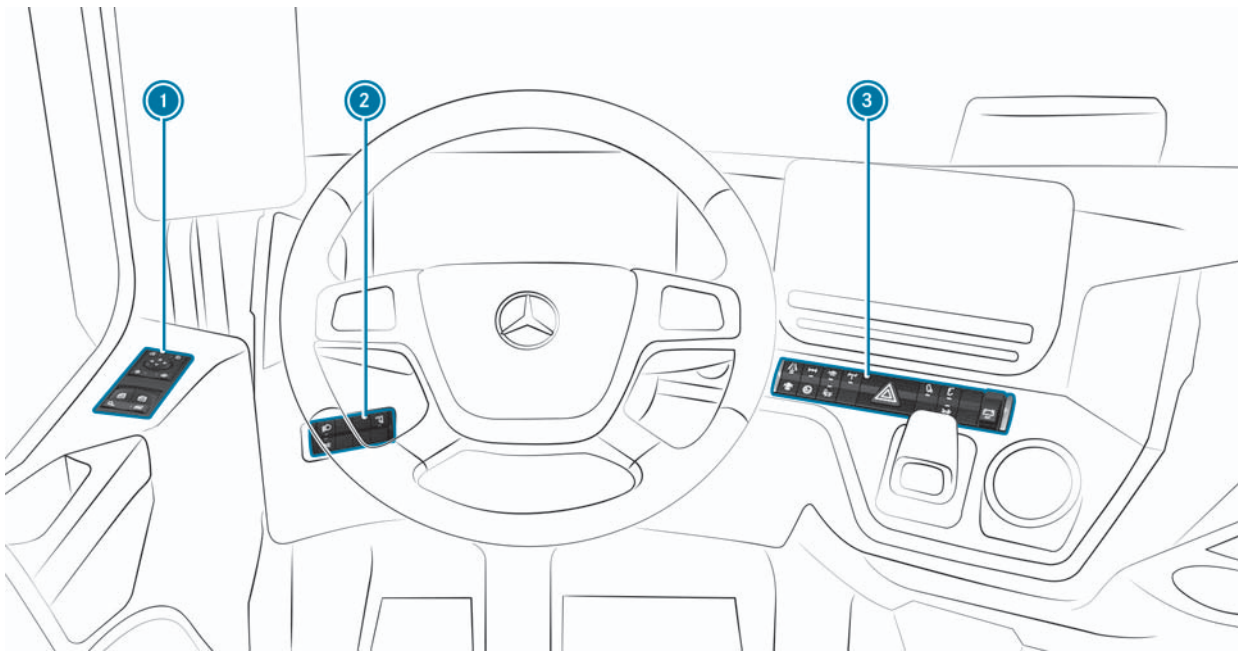

Switch panels in the driver cockpit (example)

Switch panels

Item	Description	Page
1	Driver's door switch panel	
2	Switch panel	
	Exterior lighting Side lights	102
	Exterior lighting Dipped beam	102
	Cargo liftgate (see separate operating instructions)	
	Work lamp (switched off automatically when the vehicle pulls away)	
	Leading axle/trailing axle	341
3	Switch panel	
	Hazard warning light system	
ASR OFF	ASR (acceleration skid control system)	266
	Stability Control Assist	268
	Using differential locks	268
	Rocking-free function	256
	Crawler mode	255
	Hydraulic auxiliary drive	273
	Manoeuvring mode	265
	Electro-hydraulic cab tilt system	458

Item	Description	Page
	ATA (Anti-Theft Alarm system)	57
	ATA (Anti-Theft Alarm system) Panic alarm	58
	Battery disconnect switch	131
	Off-road gear transfer case	273
	Frequent-stop brake	242
	Level control/driving level Driving level	334
	Level control system raised driving level	338
STOP	Level control system STOP	333
	Level control/manoeuvring level	339
	Road paver mode	337
12 V	12 V voltage converter	134

Door control units

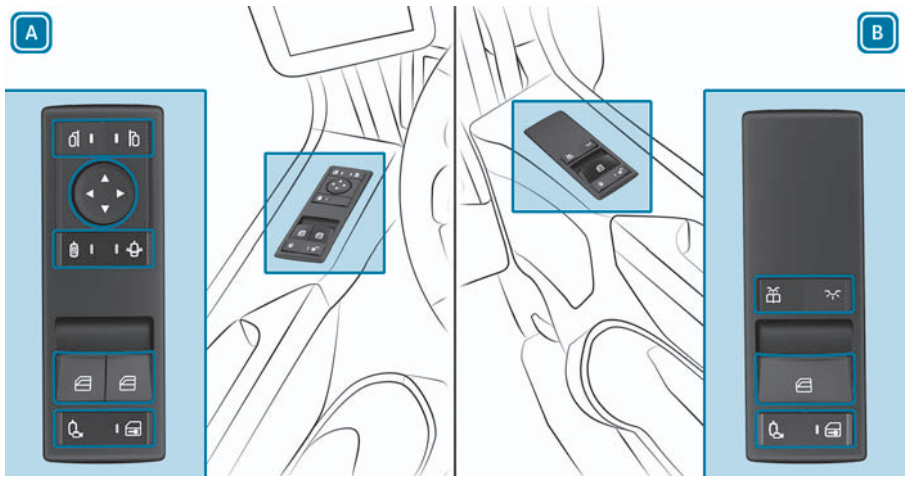

Vehicles with MirrorCam (example)

Item	Description	Page
A	**Door control unit for driver's door**	
	Selects display, left	91
	Selects display, right	91
	MirrorCam system Sets field of view	94
	Activate/deactivate camera heating	91
	Activate/deactivate automatic field of view adjustment/manoeuvring view	91
	Opens/closes the side windows	63
	MirrorCam system Activating	94
	Unlock/lock doors	53
B	**Door control unit for co-driver's door**	
	Co-driver's reading lamp	111
	Interior lamps	111
	Opens/closes the side windows	63
	Unlock/lock doors	53
	MirrorCam system Activating	94

Door control units

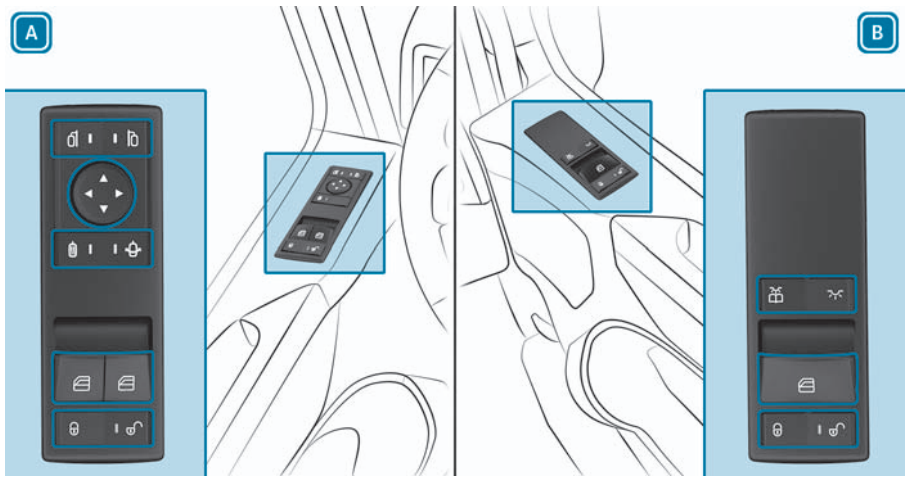

Vehicles with outside mirrors (example)

Item	Description	Page
A	**Door control unit for driver's door**	
	Outside mirror, left	89
	Outside mirror, right	89
	Adjusts the outside mirrors Setting	89
	Mirror heater	91
	Manoeuvring function for the co-driver's outside mirror	89
	Opens/closes the side windows	63
	Locks the doors	53
	Unlocks the doors	53
B	**Door control unit for co-driver's door**	
	Co-driver's reading lamp	111
	Interior lamps	111
	Opens/closes the side windows	63
	Locks the doors	53
	Unlocks the doors	53

Bunk switch panel

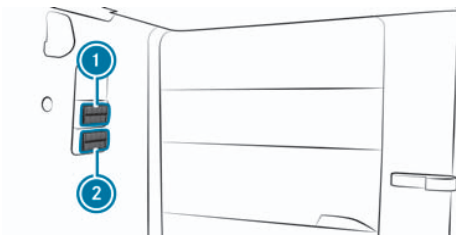

Item	Description	Page
1	**Bed/bunk switch panel**	
	Auxiliary heating	155
	Stationary air conditioning system	156
	Audio equipment	145
RADIO	Audio equipment	145
	Sliding sunroof/pop-up roof Open	65
	Sliding sunroof/pop-up roof Closing	65
	Operating the interior lighting	111
2	**Bed/bunk switch panel**	
	Activates MirrorCam system	91
	Activating/deactivating the panic alarm	59
	Opens/closes the side windows	63
	Central locking system lock	53
	Central locking system unlock	53

Multifunction steering wheel

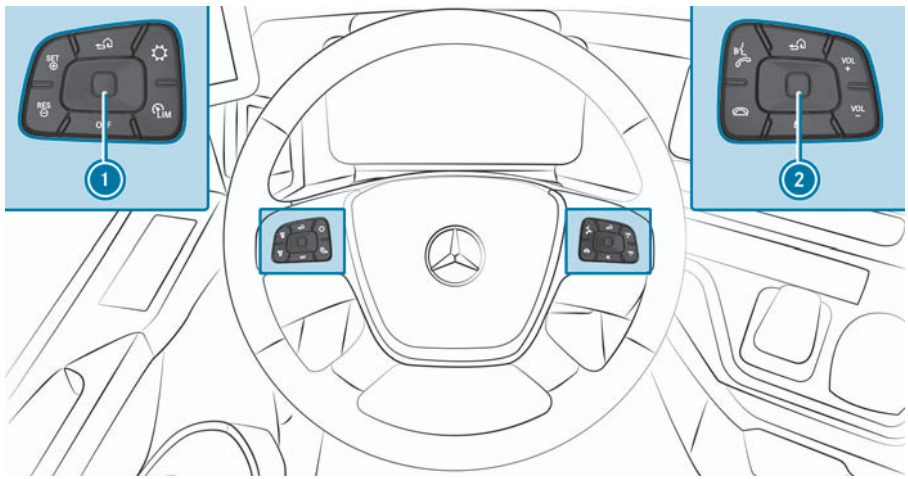

Example: buttons on the multifunction steering wheel

Item	Description	Page
1	**Navigate/confirm/select in the on-board computer**	
	Operating the on-board computer:	169
	Main menu and Back button (on-board computer)	
	Settings	
	Short button press: Selects cruise control/Proximity Control Assist	278
	Long button press: Selects limiter	277
OFF	Switch off Limiter/cruise control/Proximity Control Assist	
SET	Switching on and setting the current speed/speed limit, adjust set speed/speed limit	
RES	Switching on and calling the stored speed/speed limit, reducing the set speed/speed limit	
2	**Navigate/confirm/select in the multimedia system**	
	Touch Control	178
	Main menu and Back button (multimedia system)	

Item	Description	Page
VOL +	Increases the volume	
	Switch sound on/off	
	End/reject call	
	Make/accept a call	
	Activates the voice control system	

Combination switch and multifunction lever

Combination switch and multifunction lever

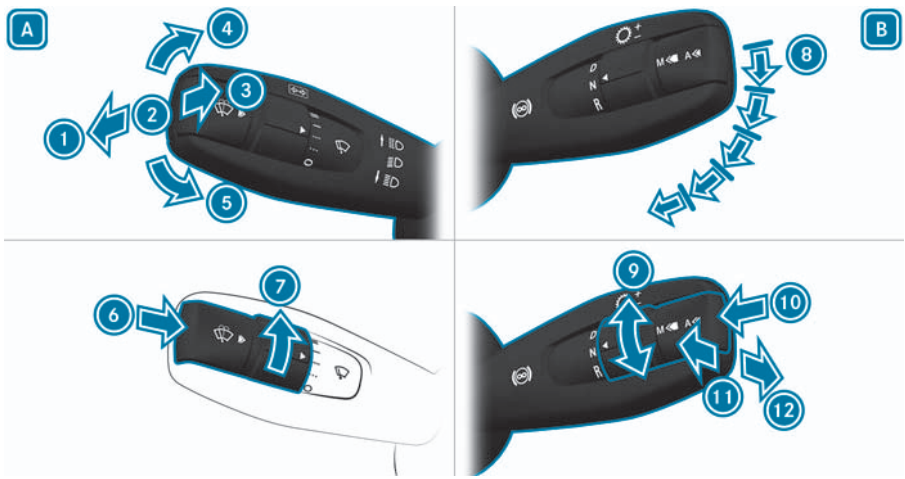

Item	Description	Page
A	**Combination switch**	
1	High beam on (when dipped beam is switched on)	109
	High beam is automatically controlled (when Adaptive Main Beam Assist is activated)	108
2	High beam off (when dipped beam is switched on)	109
3	Headlamp flashing	109
4	Turn signal indicator, right	109
5	Turn signal indicator, left	109
6	Wiping with washer fluid/ single wipe	129
7	Windscreen wipers	129
B	**Multifunction lever**	
8	Continuous brake	245
9	Driving in the automatic drive program Driving direction selection D Drive/driving forwards N Neutral R Reverse	258

Item	Description	Page
10	Drive program selection A/M automatic drive program A or manual drive program M	250
11	Driving in the automatic drive program Manual upshift, automatic drive program	258
12	Driving in the automatic drive program Manual downshift, automatic drive program	258

Restraint system

Protection provided by the restraint system

The restraint system comprises the following components:

- Seat belt system
- Driver's airbag

In the event of an accident, the restraint system can reduce the forces to which the vehicle occupants are subjected.

In addition, the driver's airbag and the seat belt tensioner of the driver's seat help prevent the driver from coming into contact with parts of the vehicle interior in the event of an accident.

A seat belt can only provide the best level of protection if it is worn correctly.

Vehicles with driver's airbag Depending on the detected accident situation, the seat belt tensioner for the seat belt of the driver's seat and the driver's airbag supplement the protection offered by a correctly worn seat belt. Seat belt tensioners and driver's airbags are not deployed in every accident.

The seat belt system does not include a seat belt tensioner if the vehicle does not have a driver's airbag.

For the restraint system to provide its full protection, each occupant must observe the following:

- ► Fasten seat belts correctly.
- ► Be in an almost upright position with their back against the seat backrest.
- ► Sit with feet resting on the floor whenever possible.
- ► Always secure persons under 1.50 m in height in an additional restraint system suitable for Mercedes-Benz Trucks.
- ► Always observe the notes on adjusting the seats (→ Page 72) and adjusting the steering wheel (→ Page 88).

No system available today can completely eliminate injuries and fatalities in every accident situation. In particular, the seat belt and airbag generally do not protect against objects penetrating the vehicle from the outside. The risk of an injury resulting from airbag deployment also cannot be ruled out entirely.

Limitations of the protection provided by the restraint system

Danger

Risk of injury or death due to modifications to the restraint system

Vehicle occupants may no longer be protected as intended if alterations are made to the restraint system.

- ► Never alter the parts of the restraint system.
- ► Never tamper with the wiring or any electronic component parts or their software.

- ► If it is necessary to adjust the vehicle to accommodate a person with disabilities, contact a qualified specialist workshop.

Daimler Truck AG recommends contacting an authorised Mercedes-Benz Trucks Service Centre.

Operational readiness of the restraint system

The functions of the restraint system are checked during the self-test when the vehicle is switched on. If the restraint system warning lamp does not light up in the instrument cluster, the components of the restraint system are operational.

Overview of warning/indicator lamps (→ Page 170).

Restraint system malfunction

If the restraint system warning lamp lights up in the instrument cluster, this means a malfunction has occurred in the restraint system.

Danger

Risk of injury due to malfunctions in the restraint system

Components in the restraint system may be activated unintentionally or not deploy as intended in an accident.

- Have the restraint system checked and repaired as soon as possible at a qualified specialist workshop.

Function of the restraint system in the event of an accident

How the restraint system works depends on the severity of the impact detected and the frontal impact anticipated.

The activation threshold for the components of the restraint system is determined by evaluating the cab deceleration. This evaluation is pre-emptive in nature. The triggering/deployment process for the seat belt tensioner and driver's airbag must take place in good time at the start of the collision.

Factors which can only be seen and measured after a collision has occurred do not play a decisive role in the deployment of an airbag. nor do they provide an indication of airbag deployment.

The vehicle may be deformed significantly without any deployment of the airbag. This is the case if only parts which are relatively easily deformed are affected and the rate of cab deceleration is not high. Conversely, the airbag may be deployed even though the vehicle suffers only minor deformation. If very rigid vehicle parts such as longitudinal members are hit, for example, the cab deceleration may be high enough for this to happen.

When a deployment situation is detected, the seat belt tensioner for the driver's seat belt and the driver's airbag are deployed together.

Danger

Risk of burns from hot airbag components

The airbag parts are hot after an airbag has been deployed.

- ► Do not touch the airbag parts.
- ► Have a deployed airbag replaced at a qualified specialist workshop as soon as possible.

Daimler Truck AG recommends that you have the vehicle towed to a qualified specialist workshop after an accident. Take this into account particularly if a seat belt tensioner or airbag was deployed.

If the seat belt tensioners or the driver's airbag are deployed, you will hear a bang, and a small amount of powder may be released:

- The bang will not usually affect your hearing.
- In general, the powder released is not hazardous to health but may cause short-term breathing difficulties to persons suffering from asthma or other pulmonary conditions.
  Provided it is safe to do so, leave the vehicle promptly, or open the window in order to prevent any breathing difficulties from arising.

Seat belts

Protection provided by the seat belt

- ► Always fasten your seat belt correctly before starting a journey.

A seat belt can only provide the best level of protection if it is worn correctly.

Danger

Risk of injury or death due to incorrectly fastened seat belt

If the seat belt is not worn correctly, it cannot perform its intended protective function.

In addition, an incorrectly fastened seat belt can also cause injuries, for example, in the event of an accident, or when braking or changing direction suddenly.

- ► Always ensure that all vehicle occupants have their seat belts fastened correctly and are sitting properly.

- ► Always observe the notes on adjusting the seats (→ Page 72) and adjusting the steering wheel (→ Page 88).

In order for the correctly worn seat belt to provide the intended level of protection, each vehicle occupant must observe the following information:

- The seat belt must not be twisted and must fit tightly and snugly across the body.
- The seat belt must be routed across the centre of the shoulder and as low down across the hips as possible.
- The shoulder section of the seat belt should not touch your neck nor be routed under your arm or behind your back.
- Avoid wearing bulky clothing, e.g. a winter coat.
- Press the lap belt as low as possible into the hip crease and tighten the

shoulder belt portion. Do not wear the lap belt across your abdomen.
During pregnancy in particular, the following instructions must be strictly observed due to the change in physique and to protect unborn life (→ Page 42).

- Do not wear the seat belt across sharp, pointed, abrasive or fragile objects.
- Only one person may use each seat belt at any given time.
- Never secure objects with a seat belt if the seat belt is being used by one of the vehicle's occupants. It must be ensured that no objects, such as pillows, are placed between a person and the seat.
- Your feet should always be placed on the ground. You should not, for example, put your feet on the dashboard. Otherwise, when braking or in the event of an accident, you may slide underneath the seat belt.

► When transporting a child in the vehicle, always observe the instructions and safety notes on "Children in the vehicle" (→ Page 46).

► To secure objects, luggage, or payload, always observe the instructions on stowage spaces and stowage compartments (→ Page 139).

Limitations of the protection provided by the seat belt

Danger

Risk of injury or death due to incorrect seat position

The seat belt does not offer the intended level of protection if you have not moved the seat backrest to an almost vertical position.

In particular, you might slide underneath the seat belt and injure yourself.

► Adjust the seat properly before commencing your journey.

► Always ensure that the seat backrest is in an almost vertical position, and that the shoulder belt is routed across the centre of your shoulder.

Danger

Risk of injury or death when additional restraint systems are not used for persons with a smaller build

Persons under 1.50 m in height may not be able to fasten their seat belt correctly without a suitable additional restraint system.

► Always secure persons under 1.50 m in height in a suitable additional restraint system.

Danger

Risk of injury or death due to damaged or modified seat belts

Seat belts cannot provide protection in the following situations:

- The seat belt is damaged, has been modified, is extremely dirty, bleached, or dyed.
- The seat belt buckle is damaged or extremely dirty.

- Modifications have been made to the seat belt tensioner, seat belt anchorage, or seat belt retractor.

Seat belts may sustain non-visible damage in an accident, e.g. due to glass splinters.

Modified or damaged seat belts could tear or fail in the event of an accident, for example.

Modified belt tensioners may be deployed unintentionally or not function as intended.

- ► Never modify the seat belt system, for example the seat belt, seat belt buckle, seat belt tensioner, seat belt anchorage, or the seat belt retractor.
- ► Make sure that the seat belts are not damaged, are not worn, and are clean.
- ► Always have the seat belts checked at a qualified specialist workshop as soon as possible after an accident.

Daimler Truck AG recommends that you use seat belts that have been specifically approved for the relevant type of vehicle by Daimler Truck AG. Otherwise, your vehicle's general operating permit could be invalidated.

Danger

Risk of injury or death from deployed pyrotechnic seat belt tensioners

Pyrotechnic seat belt tensioners that have been deployed are no longer operational and are unable to perform their intended protective function.

- ► Therefore, have deployed pyrotechnic seat belt tensioners as soon as possible replaced at a qualified specialist workshop.

Daimler Truck AG recommends that you have the vehicle towed to a qualified specialist workshop after an accident.

Note

Damage caused by trapping the seat belt

If an unused seat belt is not fully retracted, it may become trapped in the door or in the seat mechanism.

- ► Always ensure that an unused seat belt is fully retracted.

Wearing a seatbelt during pregnancy

Be diligent

During pregnancy in particular, the following instructions must be strictly observed due to the change in stature and unborn life:

- Correct seating position and posture
- Wearing the seat belt correctly

The correct seating position with an almost upright seating position and correctly fastened seat belt reduce the risks for the mother and unborn child in the event of an accident.

Especially during pregnancy, keep as much distance as possible between your pregnancy abdomen and the steering wheel due to the change in stature and unborn life.

If you cannot ensure sufficient distance from the steering wheel to operate the vehicle safely, another person should drive the vehicle.

Note

Daimler Truck AG recommends that you get professional advice, e.g. from a doctor, regarding the possible risks of driving during pregnancy.

Wearing a seat belt

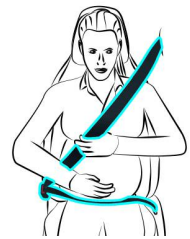

During pregnancy, pay particular attention to the following instructions:

- Press the lap belt as deeply as possible into the bend of your hips and pull it tight with the shoulder strap. Do not wear the lap belt across your pregnancy abdomen.
- The shoulder strap should run along the side of the pregnancy abdomen.
- Never use objects, e.g., even small cushions, between the person and the seat belt.

Fastening and adjusting the seat belts

If the seat belt is pulled out quickly or sharply, the seat belt retractor locks. The belt strap cannot be pulled out any further.

Note

A seat belt can only provide the best level of protection if it is worn correctly. Observe the notes on fastening the seat belt (→ Page 40).

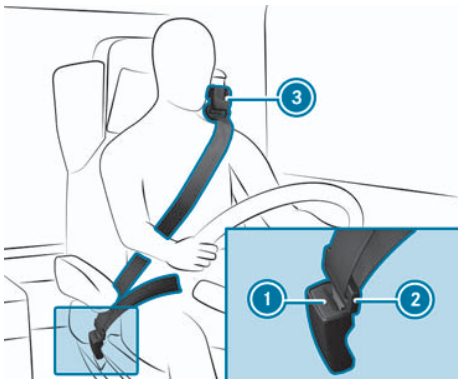

- Always engage the seat belt tongue (2) of the seat belt into the seat belt buckle (1) of the corresponding seat.

Adjusting the seat belt height

- With the release knob depressed, adjust the belt sash guide (3) to the position appropriate to your body size.

Engage the belt sash guide

- Let go of release knob and make sure that seat belt sash guide (3) has engaged. Information on operating the seat (→ Page 74).

Releasing the seat belt

- Press the release button in the seat belt buckle and guide the seat belt back with the seat belt tongue.

Function of the seat belt warning for the driver and co-driver

The [ ] seat belt warning lamp in the instrument cluster is a reminder that all vehicle occupants must wear their seat belts correctly.

A warning tone may also sound.

Depending on the vehicle equipment, the seat belt warning lamp [ ] extinguishes and the warning tone is switched off:

- The driver's seat belt is fastened.
- The driver and co-driver have fastened their seat belts.

Overview of warning/indicator lamps (→ Page 170).

Airbag

Airbag installation location

The installation location of the driver's airbag is identified by the AIRBAG label on the steering wheel.

When deployed, the driver's airbag can increase protection of the driver's head and thorax.

Protection provided by the airbag

Depending on the accident situation, an airbag can supplement a seat belt which is worn correctly, thereby increasing protection.

Danger

Risk of injury or death due to incorrect seat position

If you deviate from the correct seat position, the airbag cannot perform its intended protective function.

Every vehicle occupant must ensure the following points:

- Fasten seat belts correctly. Pregnant women must take particular care to ensure that the lap belt never lies across the abdomen.
- Observe the following notes.
  - ► Always ensure that there are no objects located between the airbag and the vehicle occupant.

Every vehicle occupant must observe the following notes to prevent risks due to the airbag deploying:

- ► Adjust the seats properly before beginning your journey. Move the driver's seat as far back as possible. Always observe the notes on adjusting the seats (→ Page 74) and adjusting the steering wheel (→ Page 88).
- ► Hold the steering wheel by the rim only. This allows the airbag to deploy fully. During pregnancy in particular, the greatest possible distance to the steering wheel must be maintained due to the change in physique and to protect unborn life.
- ► Always lean against the seat backrest while driving and do not lean forwards. You may otherwise be in the deployment area of the airbag.
- ► Always place your feet on the floor. Do not, for example, place your feet on the dashboard.
- ► If children are being transported in the vehicle, please observe the additional notes/instructions (→ Page 46).
- ► Always stow objects correctly and securely.

Objects in the vehicle interior could jeopardise the correct functioning of an airbag. Every vehicle occupant must always ensure the following points:

- ► Make sure there are no people, animals, or objects between the driver and the driver's airbag.
- ► There are no hard objects, e.g. coat hangers, hanging on the grab handles or coat hooks.
- ► Do not attach accessories such as mobile navigation devices, mobile phones, or cup holders in the airbag's deployment area, e.g. on the steering wheel or on the door. Always observe the accessory manufacturer's installation instructions, in particular the notes on a suitable place to fit accessories.
- ► There are no heavy, sharp-edged or fragile objects in the pockets of your clothing. Stow such objects in a suitable place.

Limitations of the protection provided by the airbag

Danger

Risk of injury due to modifications to the cover of an airbag

If you modify the cover of an airbag or affix objects such as stickers to it, the airbag can no longer function as intended.

- ► Never modify the cover of an airbag.
- ► Do not attach any objects to the cover.

The installation location of an airbag is identified by the AIRBAG label (→ Page 44).

Danger

Risk of injury due to deployed airbag

A deployed airbag no longer offers any protection.

- ► Have the vehicle towed to a qualified specialist workshop in order to have the deployed airbag replaced.

- ► Have deployed airbags replaced as soon as possible.

Travelling safely with children in the vehicle

Always observe when children are travelling in the vehicle

Note

Be sure to observe the safety instructions relevant to the situation. You will be able to identify possible risks and avoid dangers when children are travelling in the vehicle (→ Page 47).

Be diligent

Bear in mind that failing to take due care when securing a child in the child restraint system may have serious consequences. You should always be consistent and carefully secure a child before every journey.

- ► Infants and children must never travel sitting on the lap of a vehicle occupant.

In order to better protect children of under 12 years of age or under 1.50 m in height, Daimler Truck AG strongly recommends observing the following:

- Always secure the child in a child restraint system suitable for your Mercedes-Benz truck.
- The child restraint system must be appropriate to the age, weight, and size of the child.
- The vehicle seat must be suitable for the child restraint system to be fitted.

The generic term child restraint system

The generic term child restraint system is used in these operating instructions.

A child restraint system is, for example:

- A baby car seat
- A rearward-facing child seat
- A forward-facing child seat
- A child booster seat with a backrest and seat belt guides

The child restraint system must be appropriate to the age, weight, and size of the child.

Observe laws and regulations

- ► Always observe the legal requirements when using a child restraint system in the vehicle.
- ► Ensure that the child restraint system is approved in accordance with the valid test specifications and guidelines.

Further information can be obtained at a qualified specialist workshop. Daimler Truck AG recommends that you use an authorised Mercedes-Benz Trucks Service Centre for this purpose.

Detecting risks, avoiding dangers

Securing systems for child restraint systems in the vehicle

Only use the following fastening system for child restraint systems:

- the vehicle's seat belt system

Advantages of a rearward-facing child restraint system

Babies or infants should preferably travel in a suitable rearward-facing child restraint system. In this case, the child is seated in the opposite direction to the direction of travel and is facing backwards.

Babies and infants have comparatively poorly developed neck muscles in relation to the size and weight of their head. A rearward-facing child restraint system can reduce the risk of injury to the cervical spine in an accident.

Always secure child restraint systems correctly

Warning

Risk of injury or death due to an incorrectly installed child restraint system

The child cannot then be protected or restrained as intended.

- ► Always comply with the manufacturer's installation instructions for the child restraint system and its correct use.
- ► Make sure that the entire base of the child restraint system always rests on the seat cushion of seat.
- ► Never place objects under or behind the child restraint system, e.g. cushions.
- ► Only use child restraint systems with its intended genuine cover.
- ► Always replace damaged covers with genuine covers.

- ► It is recommended to use child restraint systems recommended for Mercedes-Benz Trucks whenever possible.

Danger

Risk of injury or death due to unsecured child restraint systems in the vehicle

If the child restraint system is incorrectly fitted or not secured, it can become detached.

The child restraint system may be thrown around and hit vehicle occupants.

- In addition, always be sure to correctly install any unused child restraint systems.
- Always comply with the manufacturer's installation instructions for the child restraint system.

- Be sure to observe the installation and operating instructions provided by the manufacturer of the child restraint system being used as well as the vehicle-specific notes at all times: Securing the child restraint system with the seat belt on the front passenger's seat (→ Page 49).
- Observe the warning labels in the vehicle interior and on the child restraint system.

Do not make modifications to child restraint systems

Danger

Risk of injury from modifications to the child restraint system

The child restraint system can no longer function as intended. There will be an increased risk of injury!

- Never alter a child restraint system.
- Only install accessories that the manufacturer of the child restraint system has specifically approved for that child restraint system.

Daimler Truck AG recommends Daimler Truck AG care products for cleaning child restraint systems recommended for Mercedes-Benz trucks.

Only use child restraint systems which are not damaged

Danger

Risk of injury or death due to the use of damaged child restraint systems

Damaged child restraint systems, those subjected to stress during an accident or their securing systems may no longer provide protection as intended.

It may not be possible to restrain the child.

- Replace damaged child restraint systems or those subjected to stress during an accident as soon as possible.
- Have the securing systems of child restraint systems checked at a qualified specialist workshop as soon as possible before a child restraint system is installed again.

Avoid direct sunlight

Danger

Risk of burns when the child seat is exposed to direct sunlight

If the child restraint system is exposed to direct sunlight, its parts may heat up considerably.

Children could suffer burns from these parts, particularly from the metal parts of the child restraint system.

- ► Always ensure that the child restraint system is not exposed to direct sunlight.
- ► Protect the child restraint system, e.g. with a blanket.
- ► If the child restraint system was exposed to direct sunlight, let it cool down before securing the child in it.
- ► Never leave children unattended in the vehicle.

Observe the following when stopping or parking

Danger

Risk of accident and injury due to children left unattended in the vehicle

If you leave children unattended in the vehicle, some of the things that might happen include:

- They may open doors, thereby endangering other persons or road users.
- They may get out and be struck by oncoming traffic.
- They may operate vehicle equipment and become trapped.

In addition, children could also set the vehicle in motion, for example, by

- Releasing the parking brake.
- Changing the transmission position.
- Starting the vehicle.

- ► Do not leave children unattended in the vehicle.
- ► When leaving the vehicle, always take the key with you and lock the vehicle.
- ► Keep the key out of the reach of children.

Danger

Danger to life due to exposure to extreme heat or cold in the vehicle

If persons - particularly children - are subjected to prolonged exposure to intense heat or cold, there is a risk of severe injury or even death!

- ► Never leave persons, and particularly children, unattended in the vehicle.

Securing the child restraint system with the seat belt on the co-driver's seat

Child restraint systems in the "Universal" category are marked with an orange approval label.

Example of an approval label

When fitting a belt-secured child restraint system on the co-driver's seat, always observe the following:

☑	When using a child restraint system in the "Universal" category, ensure that it is approved for the vehicle seat.
☑	Observe the manufacturer's installation and operating instructions for the child restraint system used.
☑	The backrest of a forward-facing child restraint system must, as far as possible, rest flat against the backrest of the co-driver's seat.
☑	The child restraint system must not be put under strain between the roof and the seat cushion and/or be fitted facing the wrong direction. Adjust the seat backrest angle as appropriate.
☑	The child restraint system must not be put under strain by the head restraint. Adjust the head restraints as appropriate.
☑	Never place objects under or behind the child restraint system, e.g. cushions.

- ▶ Move the co-driver's seat as far back as possible.
- ▶ Fully retract the seat cushion length adjustment.
- ▶ Adjust the seat cushion angle in such a way that the front of the seat cushion is in the topmost position and the rear of the seat cushion in the lowest position.
- ▶ Adjust the seat backrest to an almost vertical position.
- ▶ Fit the child restraint system.

Note
The entire base of the child restraint system must always rest on the seat cushion of the co-driver's seat.

- ▶ Always make sure that the shoulder belt strap is correctly routed from the seat belt outlet of the vehicle to the shoulder belt guide on the child restraint system.

Note
The shoulder belt strap must be routed forwards and downwards from the seat belt outlet.

- ▶ If necessary, adjust the seat belt outlet and the co-driver's seat as appropriate.

Notes on pets in the vehicle

Danger

Risk of accident and injury due to animals left unsecured or unattended in the vehicle

If you leave animals unattended or unsecured in the vehicle, they could press buttons or switches, for example.

This can lead to animals, for example, activating vehicle equipment and getting trapped, or turning systems on or off and thereby endangering other road users.

Unsecured animals may also be thrown about the vehicle in the event of an accident or sudden steering and braking manoeuvres and injure vehicle occupants in the process.

- Never leave animals in the vehicle unattended.
- Always correctly secure animals while driving, e.g. using a suitable animal carrier.

Electronic key

Overview of electronic keys

You require a key coded for the vehicle to use the following functions:

- Switching on the vehicle
- Starting the vehicle
- Shifting gears

Note

If a vehicle key is lost, obtaining a replacement is a time-consuming process.

This can only be done through an authorised Mercedes-Benz Trucks Service Centre.

Daimler Truck AG therefore recommends that you always keep an easily accessible replacement key with you for emergencies.

If you lose a key, have it disabled at an authorised Mercedes-Benz Trucks Service Centre.

Key with remote control

Key with remote control and lamp check

Your vehicle is equipped with one of two keys.

If the vehicle is equipped with lockable fuel tanks, you will receive additional keys for the lockable fuel tank caps.

If the key's battery is low or almost discharged, the instrument cluster will show you a corresponding display message.

Change the battery of the key (→ Page 60).

Using the emergency key element

Removing

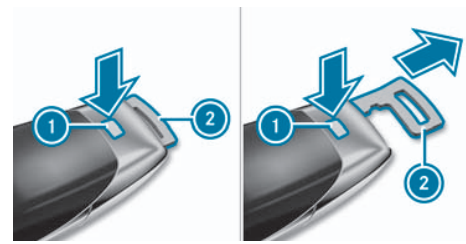

- ► Press release knob ①.
  - ◁ Emergency key ② is pushed out slightly.
- ► Pull out emergency key ② until it engages in the intermediate position.

Note

You can use the intermediate position of emergency key ② to attach the key to a key ring.

- ► Press release button ① again and fully remove emergency key ②.

Inserting

- Press release knob (1).
- Insert emergency key (2) to the intermediate position or fully until it engages.

Deactivating the function of the key

Vehicles with keyless start

If you deactivate the function of the relevant key, it is no longer possible to authorise driving with a keyless start. Activate the function of the relevant key so that the function is available again as usual.

You can also deactivate the function of the key to reduce the energy consumption of the key if you do not use the vehicle or a key for an extended period of time.

- **To deactivate:** Press and hold the [🔒] button of the key.
- With [🔒] button pressed, press the [🔓] button of the key twice in rapid succession as soon as possible.
  - ◁ The indicator lamp of the key lights up once briefly and once long.
- **To activate:** Press any button on the key.

or

- Hold the key against the contact point for emergency operation (→ Page 226).

Carry out lamp check with the key

The lamp check assists you in making your departure checks and helps you identify defective bulbs/LEDs.

- Apply the parking brake.
- Press the [☀] button on the key.
  - ◁ Low beam headlamps, marker lights, tail lights, and licence plate lighting light up continuously. The turn signal, main-beam, brake light, daytime running lights, reversing light, fog light, and the work lamp are switched on one after the other. This cycle is repeated three times.

If you want to cancel the lamp check, press the button [☀] again or release the parking brake.

Central locking system

Unlocking and locking the central locking system

Unlock/lock the outer door lock using the key

Note

If you use the emergency key element to unlock the door and ATA is primed (→ Page 58), the alarm is triggered.

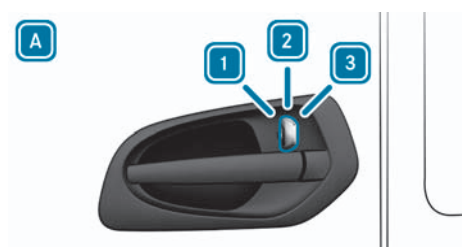

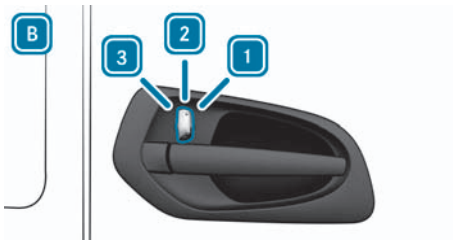

- Insert the key into the driver's door lock (Code F9Y only) A front-passenger door lock B into position 2.
- **To unlock:** Turn the key to the 1 position.
  - ◁ The door is unlocked.
- **To lock:** Turn the key to the 3 position.
  - ◁ Both doors are locked.

Unlocking/locking using the remote control

- To unlock: Press the button on the key.
  - ◁ The driver's door or both doors are unlocked.

Note

You can change the unlocking function of the remote control so that either both front doors or just the driver's door is unlocked when you press the button. To switch between the two unlocking functions, press and hold both remote control buttons simultaneously for approximately six seconds. The LED in the key flashes twice as confirmation. If you have selected the function that only unlocks the driver's door, you can unlock the front-passenger door by pressing the button again.

- **To lock:** Press the button on the key.
  - ◁ Both doors are locked.

Central locking and unlocking with the button (vehicles without MirrorCam system)

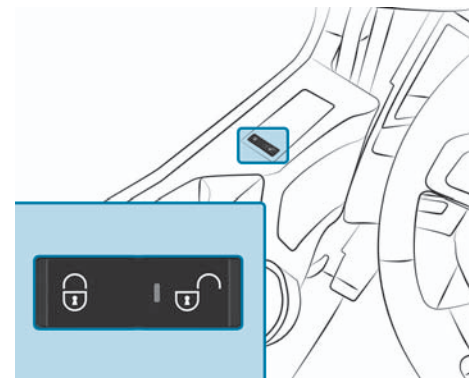

- Close both doors.
- **Central locking:** Press the button.
- **Central unlocking:** Press the button .
  - ◁ The indicator lamp in the button flashes briefly.

Locking/unlocking centrally using the button (vehicles with MirrorCam system)

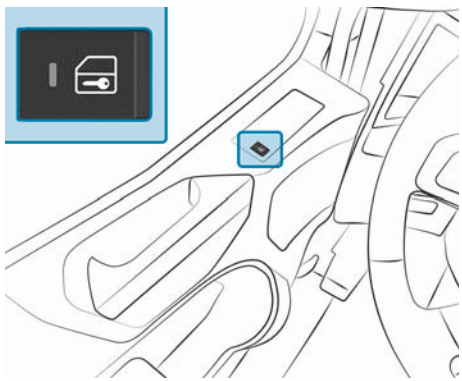

- Close both doors.
- **Central locking:** Press the button.
- **Central unlocking:** Press the button.
  - The indicator lamp in the button flashes briefly.

Note

Depending on the equipment, vehicles can be locked automatically at speeds above 20 km/h. This function is not adjustable.

There is a risk of being locked out in the following situations:

- When tow-starting the vehicle
- When the vehicle is on the roller dynamometer

Operating the convenience central locking system

Danger

Risk of becoming trapped due to lack of attention during convenience closing

When the convenience closing feature is operating, parts of the body could become trapped in the closing area of the side window and the sliding sunroof.

- During convenience closing, monitor the entire closing process, and make sure that no body parts are in the closing area.

Warning

Risk of becoming trapped when opening and closing the sliding sunroof/pop-up roof

Body parts may become trapped in the opening/closing area.

- When opening and closing, make sure that no one's limbs are in the opening/closing area of the sliding sunroof/pop-up roof.
- If someone is trapped, release the button immediately or press the top of the button in order to stop the closing process.

Danger

Risk of becoming trapped when closing the side window

Body parts may become trapped in the closing area when closing a side window.

- ► During the closing process, make sure that no body parts are in the closing area.
- ► If someone is trapped, release the button as soon as possible, or press the button in order to reopen the side window.

Convenience closing

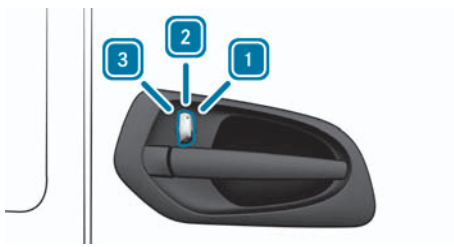

- ► Insert the integrated key into position [2] in the co-driver's door lock, then turn it to position [3] and hold it there.

or

- ► **Vehicles without ATA:** Press the key [🔓] button for about two seconds.

or

- ► **Vehicles with ATA:** Press the [🔓] button on the key.
  - ◁ All turn signal lamps flash three times. The doors are locked. The side windows and the sliding sunroof/pop-up roof close.

Note

The roof hatch is not closed.

If there is a risk of becoming trapped:

- ► Turn the integrated key to position [1] immediately and hold it there until the side windows and the sliding sunroof /pop-up roof open again.

or

- ► Press and hold the [🔓] button on the key until the side windows and the sliding sunroof/pop-up roof open again.
  - ◁ The driver's door is unlocked.

Convenience opening

- ► Insert the integrated key in position [2] in the door lock, then turn it to position [1] and hold it there.

or

- ► Press and hold the [🔓] button on the key until the side windows and the sliding sunroof/pop-up roof have reached the desired position.
  - ◁ All turn signal lamps flash once. The driver's door is unlocked. The side windows and the sliding sunroof/pop-up roof open.

Note

The roof hatch is not closed.

Cab lock anti-intrusion protection

Note

The cab lock anti-intrusion protection can only be locked/unlocked from the inside and is not part of the central locking system.

Do not use the cab lock anti-intrusion protection while the vehicle is in motion. Otherwise, in an emergency situation, it could impede the efforts of emergency responders attempting to rescue persons from the cab.

The cab lock anti-intrusion protection is used to prevent unauthorised entry into the cab, e.g. during rest times.

Locking and unlocking the cab lock anti-intrusion protection

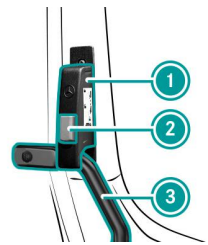

Cab lock (example of locked driver's door)

- ► Close the doors.
- ► **To lock:** Press the securing knob ② of the cab lock anti-intrusion protection ① and pull the additional door lock downwards.
  - ◁ The cab lock anti-intrusion protection encloses the grab handle ③.
- ► **To unlock:** Press the cab lock anti-intrusion protection's securing knob ② ①.
  - ◁ The additional door lock is unlocked.

ATA (Anti-Theft Alarm system)

Notes on ATA

ATA monitors the following systems:

- on the towing vehicle:
  - the doors
  - the outside flaps
  - the power supply
  - the cab tilt lock
  - the vehicle interior (can be deactivated)
  - the maintenance flap
  - the fuel tank
- the box bodies (optional)

Vehicles with battery disconnect switch: If ATA is activated and the power supply is interrupted using the battery disconnect switch (→ Page 131), ATA triggers an alarm.

Observe the following:

- If ATA is activated, it confirms the locking procedure by flashing all turn signal lamps three times. If the turn signal lamps do not flash three times, one or more components are not in

the rest position. ATA cannot monitor these components, e.g. outside flaps that are open.

- Components that are moved to the rest position within approximately 30 seconds of ATA being reset will be monitored.
- If you subsequently close the outside flaps and want to include them in the monitoring, activate ATA again.

ATA alarm

If ATA triggers an alarm, the following warnings are given:

- all turn signal lamps flash for approximately five minutes.
- the alarm siren sounds for approximately 30 seconds.

Switching ATA on/off

Requirements

- The vehicle is switched off or the power supply is switched on.
- The windows, the roof hatch, the sliding roof and the pop-up roof are closed.
- The curtains are retracted.
- The exterior flaps are closed.
- There are no loose objects in the cab, e.g. mascots or coat hangers.

Switching on ATA with interior motion sensor

Danger

Risk of becoming trapped when closing the side window

Body parts may become trapped in the closing area when closing a side window.

- ▶ During the closing process, make sure that no body parts are in the closing area.
- ▶ If someone is trapped, release the button as soon as possible, or press the button in order to reopen the side window.

Warning

Risk of becoming trapped when opening and closing the sliding sunroof/pop-up roof

Body parts may become trapped in the opening/closing area.

- ▶ When opening and closing, make sure that no one's limbs are in the opening/closing area of the sliding sunroof/pop-up roof.
- ▶ If someone is trapped, release the button immediately or press the top of the button in order to stop the closing process.

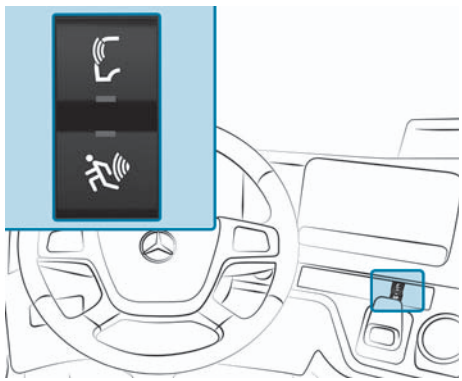

- Hold the integrated key in the driver's door lock in the lock position for approximately two seconds.
- Then turn the integrated key back to the basic position and remove it.

or

- Press the button on the key.
  - All turn signal lamps flash three times and the indicator lamp in the button flashes. The vehicle has been locked. Vehicles with convenience central locking system: The window and the sliding/pop-up roof close.

Switching on ATA without interior motion sensor

If there will be persons or animals remaining in the vehicle, activate ATA without interior motion sensor.

- Briefly press the upper section of the button .
  - The indicator lamp on the button will light up. The interior protection remains deactivated for the next locking procedure.
- Lock the vehicle with the integrated key or the remote control.

or

- Press the top of the button for more than two seconds (not applicable for the Netherlands).
  - The vehicle locks and all turn signal lamps flash three times.
  - ATA is switched on.

When you switch on the vehicle, the ATA is deactivated automatically.

Switching off ATA and cancelling the alarm

- Press the button on the key.

or

- If the ATA was activated with the button, press the top of the button again for longer than two seconds (not applicable for the Netherlands).
  - All turn signal lamps flash once.

When you switch on the vehicle, the ATA is deactivated automatically.

Activating/deactivating the panic alarm

You can use the button to trigger the vehicle's alarm system, e.g. in the event of danger.

Replacing the key battery

Note

The function may also be available in vehicles without anti-theft alarm system.

- **Switching on:** Press the lower section of the button .
  - ◁ The alarm is triggered and the vehicle is locked.
    Vehicles with convenience central locking system: The windows and the sliding and pop-up roof close.

Note

The roof hatch is not closed.

- **Deactivation:** Press the lower section of the button .
  - ◁ The alarm switches off.
- In vehicles without anti-theft alarm system, you must press and hold the button for two seconds.
  - ◁ The alarm switches off.

Replacing the key battery

Danger

Risk of fatal injuries due to swallowing batteries

Batteries contain toxic and corrosive substances. Swallowing batteries may cause severe internal burns and/or chemical burns to occur within two hours.

There is a risk of fatal injury!

- Keep batteries out of the reach of children.
- If the cover and/or battery compartment does not close securely, do not use the key any longer, and keep it out of the reach of children.
- If batteries are swallowed, seek medical attention as soon as possible.

Note

Environmental damage due to improper disposal of batteries

Batteries contain pollutants. It is illegal to dispose of them with the household rubbish.

- Dispose of batteries in an environmentally responsible manner. Take discharged batteries to a qualified specialist workshop or to a collection point for used batteries.

Requirements

- You will need a CR°2032-type 3 V button cell.

Daimler Truck°AG recommends that you have the battery replaced at a qualified specialist workshop.

- Remove the emergency key.

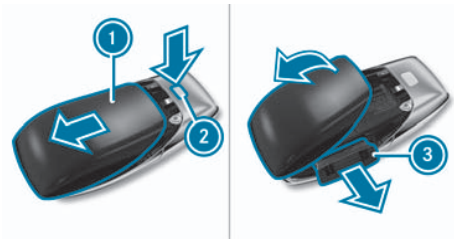

- ► Press release button ② down fully and slide cover ① in the direction of the arrow.
- ► Fold out cover ① in the direction of the arrow and remove.
- ► Slide off battery compartment ③ and take out the discharged battery.
- ► Insert the new battery into the battery compartment ③. Observe the positive pole marking in the battery compartment and on the battery when doing this.
- ► Slide in battery compartment ③.
- ► Re-attach cover ① and push it until it engages.

Problems with the locking system

When ATA is primed, there is no response from the turn signal lamps.

One of the monitored component parts has not been locked correctly.

- ► Deactivate ATA (→ Page 58).
- ► Check that the monitored component parts are locked, e.g.:

- Doors
- Windows
- Cab tilt lock
- Outside flaps on driver's and front passenger's side
- Maintenance flap

- ► Activate ATA (→ Page 58).
- ► If there is no visual acknowledgement, have ATA checked at a qualified specialist workshop.

Getting in and out

Danger

Risk of accident and injury due to children left unattended in the vehicle

If you leave children unattended in the vehicle, some of the things that might happen include:

- They may open doors, thereby endangering other persons or road users.
- They may get out and be struck by oncoming traffic.
- They may operate vehicle equipment and become trapped.

In addition, children could also set the vehicle in motion, for example, by

- Releasing the parking brake.
- Changing the transmission position.
- Starting the vehicle.

- ► Do not leave children unattended in the vehicle.

- When leaving the vehicle, always take the key with you and lock the vehicle.
- Keep the key out of the reach of children.

Danger

Risk of injury due to excessive load on the grab handles

If you apply your full body weight to the grab handle or pull it abruptly, the grab handle may be damaged or become loose from its anchorage.

- Use the grab handles only to stabilise the seating position or to assist in getting in and out of the seat.

Note

When travelling with children in the vehicle, observe the supplemental notes (→ Page 46).

To get in and out safely, you should always use the steps and grab handles. They are the only elements designed to bear such a load.

- Do not jump out of the cab.
- Keep the steps, entrances, grab handles, and your footwear free of dirt and debris.
  - ◁ This will improve the safety of your footing.

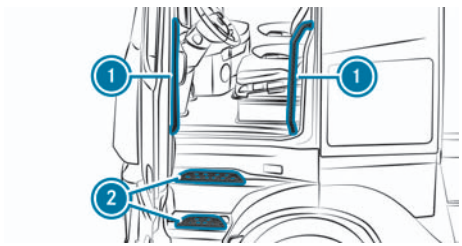

Example: L cab

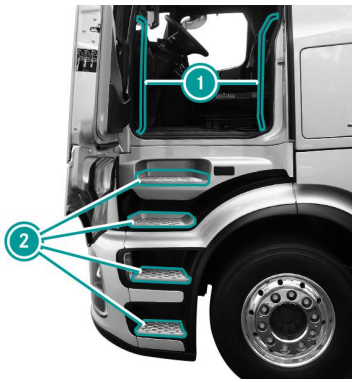

ProCabin cab

- Use the easy entry and exit feature on the suspension seat (→ Page 74).
- Use grab handles (1) and steps (2) when getting in and out.

ProCabin cab

- To avoid damaging the cab, do not lean on or step on the highlighted surfaces when getting in and out.

Side windows

Opening and closing the side windows

Danger

Risk of becoming trapped when opening a side window

When opening a side window, parts of the body could be drawn in or become trapped between the side window and window frame.

- When opening the side window, make sure that nobody is touching the window.
- If someone becomes trapped, release the button as soon as possible, or pull it in order to close the side window again.

Danger

Risk of becoming trapped when closing the side window

Body parts may become trapped in the closing area when closing a side window.

- During the closing process, make sure that no body parts are in the closing area.
- If someone is trapped, release the button as soon as possible, or press the button in order to reopen the side window.

Danger

Risk of becoming trapped or fatally injured if reversing protection is not activated

If a side window is closed again as soon as possible after it is locked, the side window will close with increased or maximum force. The reversing function will not be active and parts of the body could become trapped.

- Make sure that no parts of the body are in the closing area.
- To stop the closing procedure, release the button, or press the button again in order to open the side window again.

Requirements

- The ignition lock is in the radio position or the vehicle is switched on.

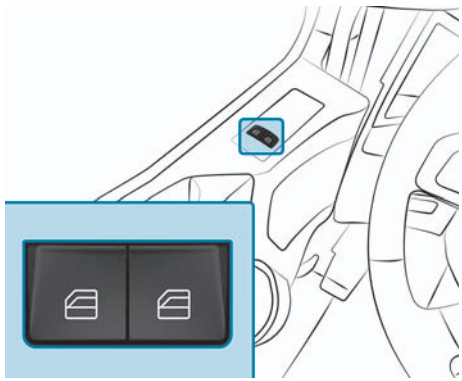

Note

After a malfunction or voltage drop, reset the side windows (→ Page 64).

Note

You can use the key to open the side windows and, for vehicles with the convenience central locking system, to close them as well (→ Page 55).

- **To open and close:** Push or pull the left- or right-hand button until the corresponding side window has reached the desired position.
- **To use convenience opening:** Briefly push the left- or right-hand button past the point of resistance.
  - ◁ The corresponding side window will open fully.
- **To use convenience closing (vehicles with convenience central locking system):** Briefly push the left- or right-hand button past the point of resistance.
  - ◁ The corresponding side window will close fully. If the side window is obstructed during closing, the automatic reversing function will halt its movement. If the side window is obstructed and you pull and hold the corresponding button, the window will close without the automatic reversing function.
- **To interrupt convenience operation:** Press or pull the corresponding button again.

Resetting the side windows

Re-adjust the side window after a voltage supply interruption or if a side window does not close or open completely.

- The ignition lock is in the radio position or the vehicle is switched on.
- Press the relevant button until the corresponding side window is open.
- Press the relevant button for another second.
- Pull the relevant button until the corresponding side window is closed.
- Pull the relevant button for another second.

Roof

Operating the sliding sunroof and the pop-up roof

Warning

Risk of becoming trapped when opening and closing the sliding sunroof/pop-up roof

Body parts may become trapped in the opening/closing area.

- When opening and closing, make sure that no one's limbs are in the opening/closing area of the sliding sunroof/pop-up roof.
- If someone is trapped, release the button immediately or press the top of the button in order to stop the closing process.

Opening the sliding sunroof and pop-up roof

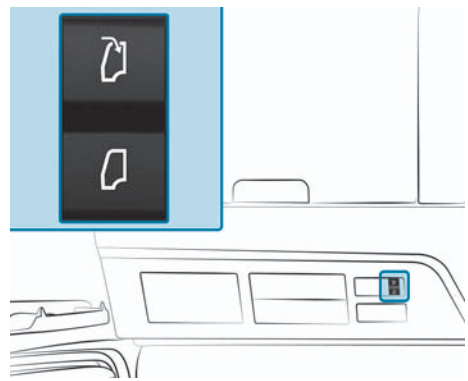

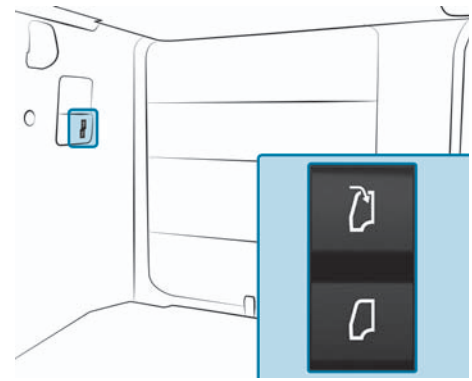

- Briefly press the upper section of the button.
  - ◁ The sliding sunroof opens. The pop-up roof will open completely.
- To stop the movement, press the or button again.
- With a sliding sunroof, press the top of the button again and hold it until the sliding sunroof has reached the desired position.

Closing the sliding sunroof and pop-up roof

- With a sliding sunroof, press and hold the button until the sliding sunroof has reached the desired position.

or

- Briefly press the lower section of the button.
  - ◁ The sliding sunroof or pop-up roof will close completely.
- To stop the movement, press the or button.

In the event of a malfunction or when the battery has been disconnected, you can also close the sliding sunroof or pop-up roof manually.

Reset the sliding sunroof after a malfunction or voltage supply interruption.

Resetting the sliding sunroof

The sliding sunroof must be adjusted after a power cut or jerky opening.

- Press and hold the button until the sliding sunroof has been completely closed for three seconds.

Opening the blackout screen and insect roller screen

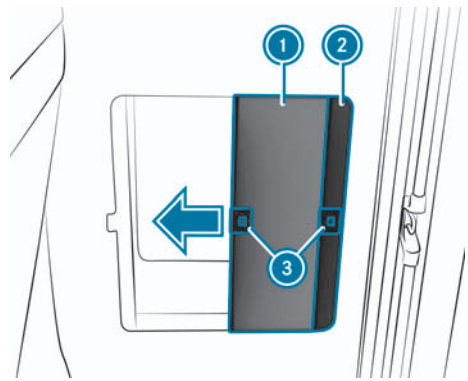

The pop-up roof is fitted with a cover frame and integrated insect screen. The cover frame can be removed for cleaning purposes.

The sliding sunroof is fitted with an insect roller screen (1) and a blackout screen (2). With a sliding sunroof, you can only ever close one screen.

- Press the handle (3) on the screen as far as it will go in the closing direction.
- Press the handle (3) upwards and unhook the screen.
- Guide the screen back to the opposite end of the roof frame and release the handle (3).

Closing the blackout screen and insect roller screen

- Pull the handle (3) on the screen up to the opposite end of the roof frame.
- Push the handle (3) down slightly at the stop and release it.
  - ◁ The screen is hooked in.

Closing the sliding sunroof manually

Note

The hexagon socket wrench for opening the sliding sunroof is in the vehicle document wallet.

Vehicles with a ClassicSpace or CompactSpace cab

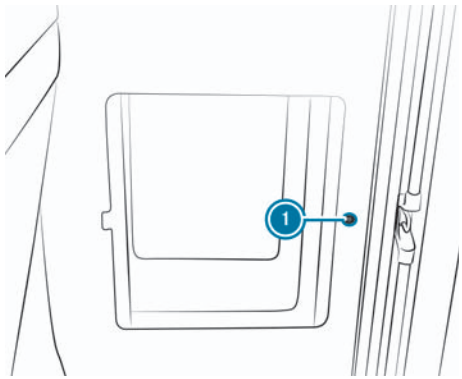

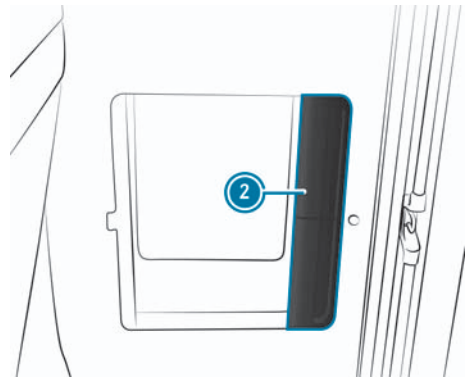

- Vehicles with ClassicSpace cabs: Remove the cover cap 1.
- Vehicles with CompactSpace cabs: Remove the cover 2.

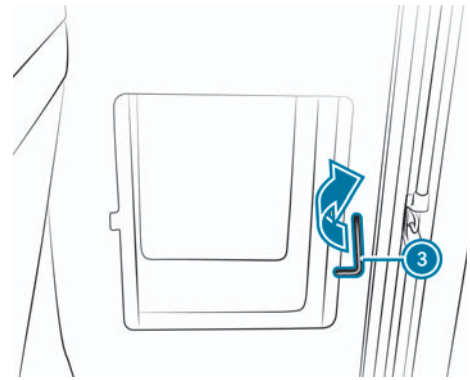

- Attach a hexagon socket wrench 3 to the actuator motor through the opening provided and turn it to the right until the sliding sunroof is completely closed.
- Vehicles with ClassicSpace cabs: Replace the cover cap 1.
- Vehicles with CompactSpace cabs: Fit the cover 2.

Vehicles with Big, Stream or GigaSpace and ProCabin Big, ProCabin Stream or ProCabin Giga cab

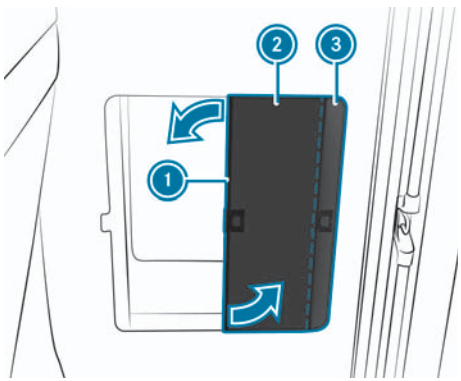

- Pull out the blackout screen (2) to the centre of the roof frame using the handle.
- Turn guide bar (1) for the screen and remove it from the screen guides on both sides of the roof frame.
- Carefully guide blackout screen (2) back until the screen stops and let it hang in the cab.
- Remove insect roller screen (3) from the screen guide in the roof frame, as previously described for blackout screen (2), and let it to hang in the cab.

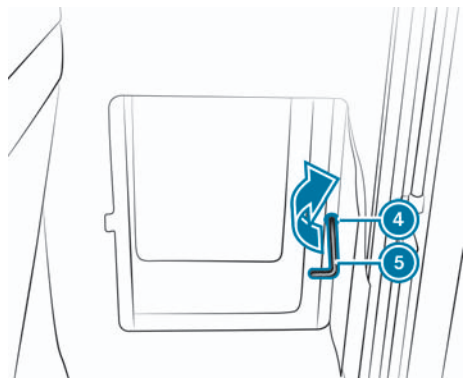

- Where necessary, press the screens against the roof frame and insert the hexagon socket wrench (5) into the actuator motor through opening (4).
- Turn the hexagon socket wrench (5) to the right until the sliding sunroof is completely closed.
- Insert the guide bar (1) for the insect roller screen (3) into the screen guides in the roof frame, turn it so that it is parallel to the end position and guide the screen back into the end position.
- Insert the guide bar for blackout screen (2) into the screen guides in the roof frame, turn it so that it is parallel to the end position and guide blackout screen (2) back into the end position.

Closing the pop-up roof mechanically

Note

The flat-blade screwdriver (4 mm blade width) is in the vehicle tool kit.

Vehicles with a ClassicSpace cab

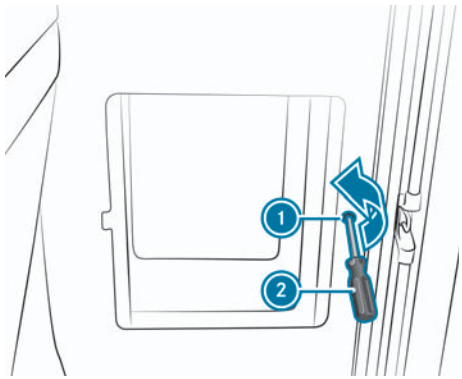

- Remove the cover cap from the opening (1).
- Insert the flat-blade screwdriver (2) into the actuator motor through the opening (1) and turn it to the left until the sliding sunroof is completely closed.
- Insert the cover cap into opening (1).

Vehicles with Big, Stream or GigaSpace and ProCabin Big, ProCabin Stream or ProCabin Giga cab

- Remove the cover from the roof lining.

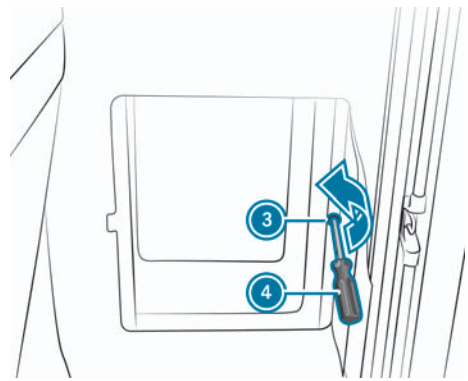

- Insert the flat-blade screwdriver (4) into the actuator motor through the opening (3) and turn it to the left until the sliding sunroof is completely closed.

Opening and closing the roof hatch

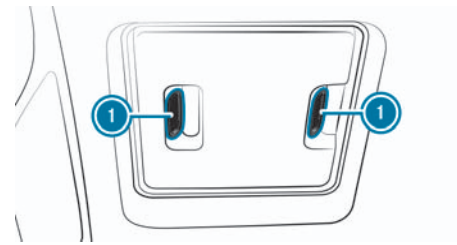

You can open the roof hatch at one end (front or back) or at both ends (front and back).

- Push the roof hatch upwards at the handles (1) or pull it down.

Opening and closing the circular roof hatch

Warning

Risk of injury due to unsecured roof hatch

The open roof hatch can close automatically in the event of an accident, braking or a sudden change of direction. Body

parts may become trapped in the opening/closing area.

► Always secure the open roof hatch.

Unlocking and opening

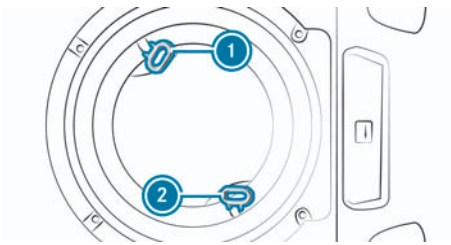

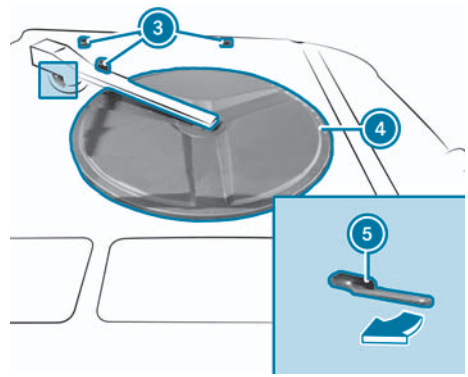

► Pull the two handles ① and ② downwards.

► Turn ① handle to the left and ② handle to the right.

◁ The roof hatch ④ will lift up.

► Push the roof hatch ④ to the left over the support buffers ③ as far as it will go.

► Swivel the lever ⑤ in the direction of the arrow as far as it will go. Hold the roof hatch with one hand so that it does not swing back.

◁ The roof hatch ④ will be pressed onto and secured on the support buffers ③ on the roof.

Closing and locking

► Swing the lever ⑤ towards the roof hatch ④ as far as it will go.

◁ The roof hatch ④ is unlocked and lifts upwards.

► Move the roof hatch ④ to the right over the roof opening as far as it will go.

► Pull the roof hatch ④ downwards using both handles ① and ②.

► Turn handle ① to the right and handle ② to the left.

Retracting/extending the roller sunblind

Extending the roller sunblind

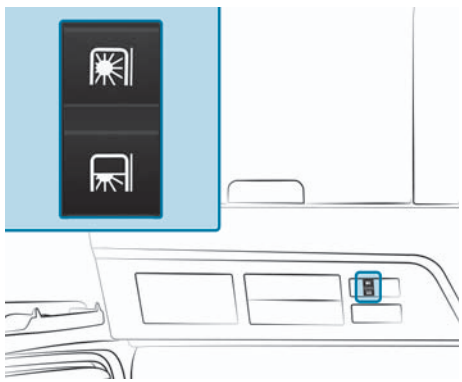

In the following situations, the roller sun blind will perform a referencing and be completely retracted:

- If the power supply is interrupted, e.g. after a malfunction or a battery change.
- If the vehicle is exposed to an excessive load, e.g. due to a pothole.

► Tap the button briefly.

◁ The roller sun blind will extend as far as the end position.

or

► Press and hold the button until the roller sun blind has reached the desired position.

Retracting the roller sun blind

► Tap the button briefly.

◁ The roller sun blind will retract as far as the end position.

or

► Press and hold the button until the roller sun blind has reached the desired position.

Note

If an error has occurred and you press a button, the roller sun blind will carry out a referencing. The roller sun blind will be retracted into the upper end position at a slower speed than normal. The roller sun blind will now be ready for normal operation.

► **If a referencing was interrupted:** Press the button and then press the button as soon as possible afterwards.

◁ The roller sun blind will be retracted into the upper end position.

Notes on the seats

Danger

Risk of accident when making significant adjustments while driving

You may lose control of the vehicle, in particular in the following situations:

- If you adjust the driver's seat, the head restraints, the steering wheel, or the mirror while the vehicle is in motion.
- If you fasten your seat belt while the vehicle is in motion.

► Before starting the vehicle: Adjust the driver's seat, head restraints, steering wheel, and mirror in particular, and fasten your seat belt.

Danger

Risk of becoming trapped when adjusting a seat

When you are adjusting a seat, you or a vehicle occupant may become trapped on the seat's guide rail, for example.

► Make sure that no parts of the body are in the seat's movement area when adjusting the seat.

Danger

Risk of injury or death due to incorrect seat position

The seat belt does not offer the intended level of protection if you have not moved the seat backrest to an almost vertical position.

In particular, you might slide underneath the seat belt and injure yourself.

► Adjust the seat properly before commencing your journey.
► Always ensure that the seat backrest is in an almost vertical position, and that the shoulder belt is routed across the centre of your shoulder.

Danger

Risk of accident due to the driver's seat not being engaged

The driver's seat may move unexpectedly while the vehicle is in motion.

This could cause you to lose control of the vehicle.

► Always ensure that the driver's seat is engaged before starting the vehicle.

Danger

Risk of becoming trapped due to insufficient space for the suspension seat

If there is insufficient space available, the suspension seat may trap parts of the body between the steering wheel and the suspension seat.

► Make sure that there is sufficient space for the suspension seat to move in.
► Fully lower the suspension seat before getting out of the seat.

Danger

Risk of becoming trapped when pressing the bellows inwards

If you press the bellows of the suspension seat inwards, your hand could become trapped.

- Do not press the bellows inwards.

Note

Damage to the seats and the seat heating due to fluids, pointed objects, or insulating materials

To prevent damage to the seats and the seat heating, observe the following instructions:

- Do not spill any fluids onto the seats. If something does get spilt onto the seats, dry the seats as quickly as possible.
- Do not switch on the seat heating if the seat covers are wet or damp. Do not use the seat heating to dry the seats.
- Clean the seats as recommended; see the "Cleaning and care" section.
- Do not transport heavy loads on the seats. Do not place any sharp objects, such as knives, nails, or tools, on the seats. Only use seats for people if possible.
- When using the seat heating, do not cover the seats with insulating materials, such as blankets, coats, bags, protective covers, child seats, or booster seats.

Note

Damage to the seats from objects in the cab

Make sure that no objects block the seats in the cab. Otherwise, the seats may be damaged.

- Keep the area for adjusting the seats clear.

Your seat must be adjusted such that you can fasten your seat belt correctly. When doing so, observe the following:

- Move the seat backrest to an almost vertical position and sit almost upright. Do not drive with the seat backrest tilted backwards.
- Ensure that your arms are slightly bent while gripping the steering wheel.
- Avoid seating positions that impede the proper alignment of the seatbelt. The shoulder section of the belt must run across the centre of your shoulder and fit snugly across your chest. The lap belt must always fit snugly and as low as possible on your pelvis, i.e. over the hip joints.
- Maintain a distance to the pedals that allows you to press them effectively.
- Make sure that you have the best possible view of the vehicle's immediate surroundings through the windscreen and the side windows, as well as the mirrors or the MirrorCam displays. Adjust the seat height if necessary.
- Also read the safety instructions on protection provided by the airbag (→ Page 44) and on children in the vehicle (→ Page 46).

- If your vehicle is equipped with a suspended seat, always use the entry and exit aid when getting out.

To enable use of a suspension seat, your vehicle's compressed-air system must have a reserve pressure of at least 700 kPa (7 bar, 100 psi).

- Do not use the seat as a climbing aid, e.g. to help you get to the top bunk.

A seat with an integrated seat belt is a safety-critical component part and restraint system.

- Be sure to also read the safety instructions on "Occupant safety" (→ Page 38).

You can find information on cleaning seats under "Cleaning and care" (→ Page 412).

- Always have any work on seats carried out at a qualified specialist workshop.

Operating the seat

Danger

Risk of accident when making significant adjustments while driving

You may lose control of the vehicle, in particular in the following situations:

- If you adjust the driver's seat, the head restraints, the steering wheel, or the mirror while the vehicle is in motion.
- If you fasten your seat belt while the vehicle is in motion.

- Before starting the vehicle: Adjust the driver's seat, head restraints, steering wheel, and mirror in particular, and fasten your seat belt.

Note

Overheating of the seat heating

The seat heating/ventilation does not automatically switch off in the event of overheating. Observe the following, otherwise the seat heating/ventilation may be damaged:

- Do not place objects on the seat.
- Do not cover the seat, e.g. with a towel or seat cushion.
- If the co-driver's seat is not occupied, switch off the seat heating and ventilation for the co-driver's seat.

Note

Damage to the headrest and the lower bunk

When adjusting the seat fore-and-aft position, the headrest may hit the seat and damage both components.

- When adjusting the longitudinal direction of the seat, make sure that the headrest of the lower bunk is fully lowered.

Note

Damage to the suspension seat

To prevent damage:

- Ensure that the suspension seat can vibrate freely. In particular, ensure that the locking mechanism for the bed does not rub against the back of the seat.

- Stow the locking mechanism for the bed in such a way, e.g. under the mattress, that it does not rub against the back of the suspension seat.

Standard/comfort/climatised static, centre, and suspension seats

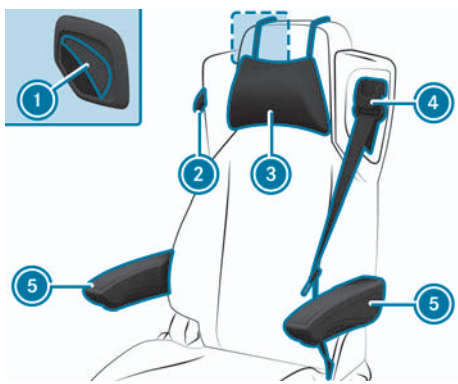

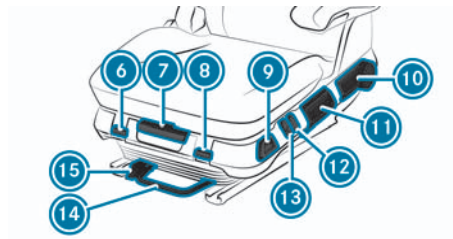

- Observe the notes on "Seats" (→ Page 72).
- When adjusting the seats, make sure that there is sufficient clearance behind the seat in particular.

To adjust the top part of the seat backrest:

- Pull lever 1 on the rear of the seat backrest up and hold it in place.
- Tilt the top part of the seat backrest into the desired position.

To fold the seat backrest:

- Pull lever 2 up and fold the seat backrest forwards or back.

To adjust the neck cushion:

- Press and hold the buttons on the rubber straps.
- Adjust neck cushion 3 to the position appropriate for your height.

To adjust the seat belt height:

- Press and hold the button on belt sash guide 4.
- Adjust belt sash guide 4 to the position appropriate for your height.

To adjust the armrests:

- Fold up seat armrests 5.
- Use the handwheel on the underside to adjust the angle of seat armrests 5.

To adjust the vibration damper:

- Use lever 6 to adjust the vibration damper in increments such that the seat does not bottom out.

To adjust the seat cushion length:

- Pull lever 7 up and hold it in place.

Operating the seat

- Push the seat cushion back/forwards until it is in the desired position.

Engage seat suspension lock:

- Pull lever ⑧ up.
  - ◁ The seat suspension engages and will be locked.

To release the seat suspension lock:

- Lower lever ⑧.
  - ◁ The seat will be able to vibrate.

To use the easy entry and exit feature:

- Press the button ⑨.
  - ◁ The seat will be lowered fully.
- Press the button ⑨.
  - ◁ The seat will return to the last height set.

To adjust the seat cushion angle:

- Push lever ⑩ down and hold it in place.
- Move the seat cushion or backrest into the desired position by applying pressure to or taking your weight off it.

To adjust the seat backrest:

- Lift your weight off the seat backrest.
- Pull lever ⑩ up and hold it in place.
- Move the seat backrest into the desired position by applying pressure to or taking your weight off it.

To adjust the seat height:

- Pull lever ⑪ up or push it down by one increment.
  - ◁ The seat will be raised or lowered by one increment.

To switch seat heating on:

- Press the button ⑫ at the top (first heating level) or bottom (second heating level).

To switch seat heating off:

- Push switch ⑫ into the centre position.

To switch seat ventilation on:

- Turn blower regulator [ ] ⑬ downwards from the [0] position.
  - ◁ You can increase the airflow in three increments.

To switch seat ventilation off:

- Turn blower regulator [ ] ⑬ all the way to the top.

To adjust the seat fore-and-aft position:

- Pull lever ⑭ up and hold it in place.
- Push the seat back/forwards until it is in the desired position.
- Release lever ⑭.
- Push the seat back or forwards until it engages audibly.

To set to the rest position:

- Pull lever ⑭ up and hold it in place.
- Push the seat back as far as it will go.
- Lift lever ⑮ as well and push the seat beyond the notch back into the rest position.

- Release levers ⑭ and ⑮.
  - ◁ By adjusting the seat fore-and-aft position, you can slide the seat forwards into the drive position again and lock it in place there.

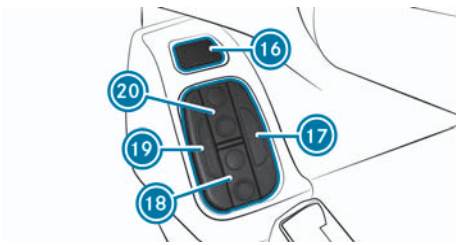

To activate/deactivate the massage function:

Note

You can prevent muscle tension using the massage function.

- Press the button ⑯.
  - ◁ When the massage function is switched on, you will feel alternating upwards and downwards waves in the lumbar area of the seat backrest. The separate air cushions in the seat backrest will inflate and deflate in succession for roughly ten minutes.

Note

You can adjust the contour of the backrest (lumbar support) and the side contours to provide support for your spine.

To adjust the seat backrest contour:

- Press the top or bottom section of button ⑳.
  - ◁ This will make the upper seat backrest contour firmer or softer.
- Press the top or bottom section of button ⑱.
  - ◁ This will make the lower seat backrest contour firmer or softer.
- Press the button ⑰.
  - ◁ This will make the side contours firmer.
- Press the button ⑲.
  - ◁ This will make the side contours softer.

Function seat

- Observe the notes on "Seats" (→ Page 72).

To adjust the armrests:

- Fold up armrests ①.
- Use the handwheel on the underside to adjust the angle of armrests ①.

To adjust the seat backrest:

- Lift your weight off the seat backrest.
- Pull lever ③ up and hold it in place.

- Move the seat backrest into the desired position by applying pressure to or taking your weight off it.

To fold up the seat cushions:

- Fold up seat cushions ② until they engage.

To fold down the seat cushion:

- Push seat cushions ② against the seat backrest and release.
- Fold down seat cushions ②.

Bunks and daybeds in the L cab

Overview of bunks and daybeds

The following bunks/daybeds can be installed in the L cab:

- Wide/narrow top bunk (→ Page 78)
- Top bunk (car transporter with two bunks) (→ Page 78)
- Top bunk, folding (→ Page 78)
- Bottom bunk (→ Page 80)
- Seat/daybed combination (→ Page 82)
- SoloStar Concept (→ Page 84)

Information on the climbing aid

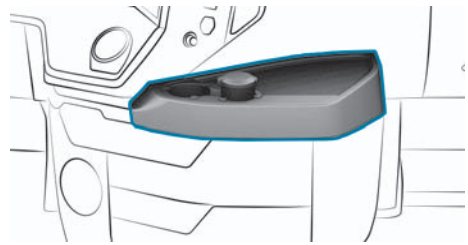

The area on the centre console is to be used as a climbing aid for the upper bunk.

Folding the top bunk up/down

Danger

Risk of injury and death if the bunk is used while the vehicle is in motion

If the vehicle occupant is on a bunk while the vehicle is in motion, it will not be possible to restrain them.

- Only use the bunk while the vehicle is switched off.

Note

Damage to the bed and seats

When folding up and down, the bed can hit the seats and both components can be damaged.

- Fold the backrests of the driver's and co-driver's seats forwards or move the seats further forwards.

Top bunk

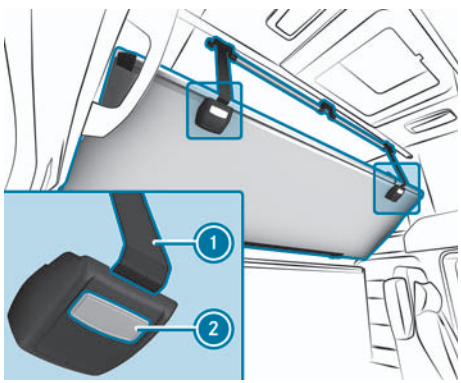

If the vehicle is standing on an uphill or downhill slope, you can bring the upper wide bunk into a horizontal position.

- Move or fold the backrests of the driver's and co-driver's seats forwards.
- If necessary, slide the driver's and co-driver's seats an adequate distance forwards.

To fold down and adjust the inclination:

- Press and hold release buttons ②.
- Swing the bunk downward.

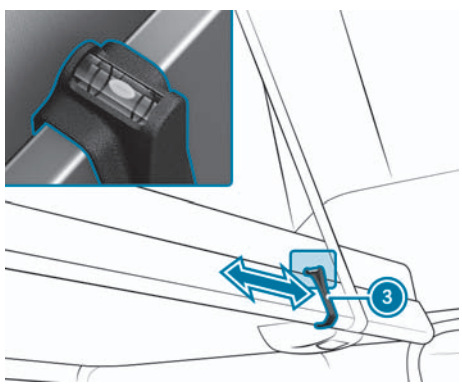

- Use the level indicator in the holder to level the ③ bed and adjust the inclination. To fully align the bunk, slide the holder ③ along the frame of the bunk.

> **Note**
> It is also possible to unclip the holder ③ at the bottom and clip it back in at the other end of the bunk.

- Release the release buttons ②.
  - ◁ The retaining straps ① will automatically engage and the bunk will be held at this angle.

To fold up:

- Swing the bunk upwards as far as it goes.

Folding the top bunk down (car transporter)

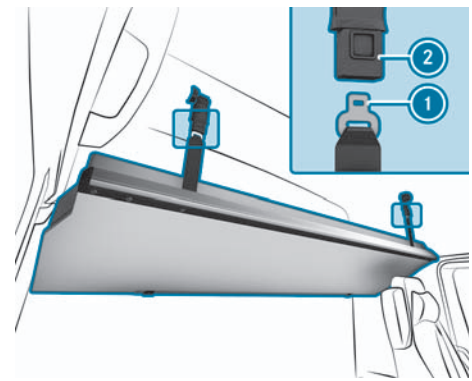

- Move or fold the backrests of the driver's and co-driver's seats forwards.
- If necessary, slide the driver's and co-driver's seats an adequate distance forwards.
- Raise the bunk slightly, hold it firmly, and press the release buttons on both seat belt buckles ②.
- Pull seat belt tongues ① ② out of both seat belt buckles.
- Swing the bunk downward.

To fold up top bunk (car transporter)

- Swing bunk upwards and secure in place.
- Press seat belt tongues ① of retaining straps into seat belt buckles ② until they engage audibly.

Folding the bottom bunk up/down

Note

Damage to the bed and seats

When folding up and down, the bed can hit the seats and both components can be damaged.

- Fold the backrests of the driver's and co-driver's seats forwards or move the seats further forwards.

Note

Damage to bunk or other components

If the bunk is not folded down during an accident, the rubber retainers may come loose from the wall brackets. The bunk folds down and can be damaged or damage other components.

- Fold down the bunk before commencing a journey.

Folding up

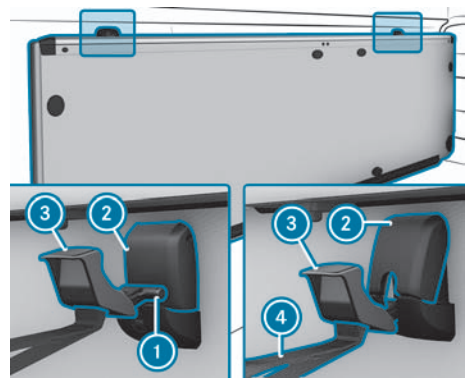

- Move or fold the backrests of the driver's and co-driver's seats forwards.
- If necessary, slide the driver's and co-driver's seats an adequate distance forwards.
- Fully lower the bunk's adjustable backrest.
- Fold up bunk and push it against the rear panel and hold.
- On both wall brackets, press the rubber retainers onto ① ② the cover one ① after the other until the rubber retainer engages.

Adjusting inclination of the bunk

- Pull on the loop ④ to raise the bunk to a vertical position.
- To change the angle, press the buckle ③ upwards and move the daybed to the desired position.

Folding down

- Push the bunk against the rear panel and hold.
- Push cover ② back.
- Unhook both rubber retainers ① from the wall brackets.
- Swing the bunk downward.

Setting up the safety net

Danger

Risk of injury and death if the bunk is used while the vehicle is in motion

If the vehicle occupant is on a bunk while the vehicle is in motion, it will not be possible to restrain them.

- Only use the bunk while the vehicle is switched off.

Danger

Risk of injury when resting on the bunk

A vehicle occupant may fall off the bunk and injure themselves.

- Always use the safety net when resting on the bunk.

- Only use bottom bunk with safety net during the journey.
- Take note of the legal requirements for the country you are currently in before using the bunk.

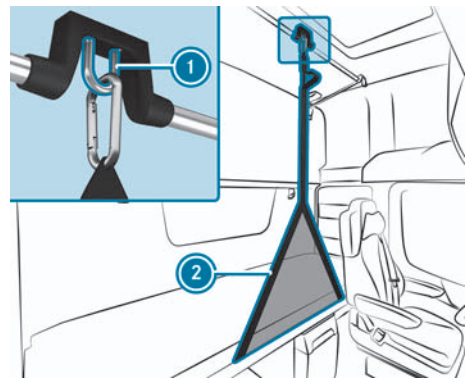

- Before starting your journey, clip safety net (2) into rail (1) on the cab roof.

Note

When there is no one occupying the bottom bunk, stow the safety net under the bunk. Hook the snap-hook into the loop provided on the left-hand edge of the safety net.

Adjusting the backrest adjuster

Vehicles with lower bunk (lowered) do not have an adjustable backrest.

Note

Damage to the adjustable backrest and seats

If the adjustable backrest is folded up and you put the seat back, both components may be damaged.

- When resetting the seat, make sure that the adjustable backrest is lowered.
- Before folding up the adjustable backrest, move the seat forwards or fold the seat backrest forwards.

Note

Damage to the bunk or adjustable backrest

If the adjustable backrest is folded up and you place objects underneath it, components may be damaged when you fold the adjustable backrest down.

- Do not place any objects underneath the folded-up backrest.

The backrest raiser may be loaded with a maximum of 50 kg.

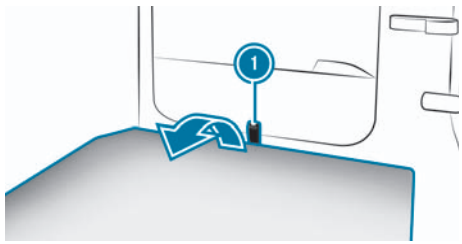

- Pull back height adjuster up by loop (1) and engage.
- **To lower to horizontal position:** Lift the adjustable backrest by the loop (1) beyond the uppermost position and lower it completely.

Notes on seat/daybed combinations

Danger

Risk of injury and death if the bunk is used while the vehicle is in motion

If the vehicle occupant is on a bunk while the vehicle is in motion, it will not be possible to restrain them.

- Only use the bunk while the vehicle is switched off.

Danger

Risk of injury when resting on the bunk

A vehicle occupant may fall off the bunk and injure themselves.

- Always use the safety net when resting on the bunk.

Danger

Risk of injury or death due to seat not being locked in place

The seating surface may move.

The seat belt cannot perform its intended protective function.

- Before a trip, always ensure that the seating surface has been locked in the seat position.

Danger

Risk of becoming trapped when folding the seat backrest up and down

When folding the seat backrest up or down, you or other vehicle occupants may become trapped.

- Ensure that the swivelling area of the seat backrest is clear and that nobody is trapped.

Danger

Risk of becoming trapped when folding the seat backrest up and down due to slamming down

If you do not hold the seat backrest firmly when folding it up and down, it will slam down.

It may hit a vehicle occupant and trap body parts.

- Always hold the seat backrest firmly when folding it up and down.

Danger

Risk of becoming trapped when pulling out the seat cushion

When you pull out the seat cushion, you or other vehicle occupants may become trapped between the seat frame and the seat cushion.

- Make sure that no body parts are in the seat cushion's movement area when you pull out the seat cushion.

The safety net on the top bunk is not a restraint system to enable the bunk to be used while the vehicle is in motion.

The seat/bunk combination is not suitable for child restraint systems.

- Only install the child restraint system on the front passenger seat.
- Observe the safety notes in the section entitled “Children in the vehicle” (→ Page 46).

Folding the top bunk up/down

Folding the seat backrest up to the reclined position

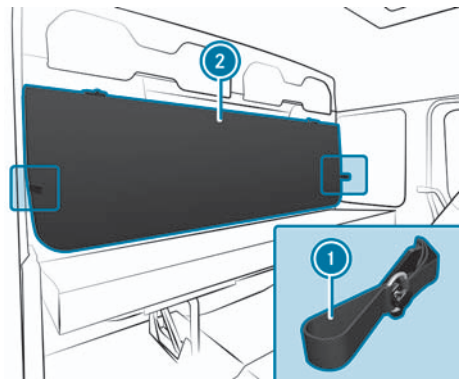

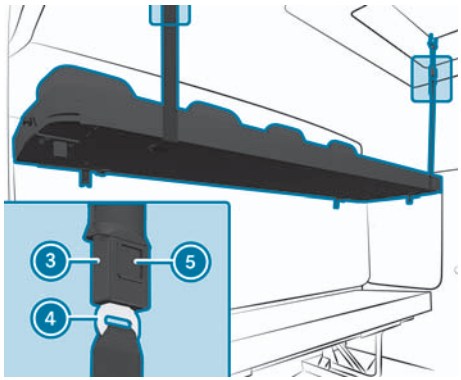

- Unhook the retaining straps (1) on the right and left of the seat backrest (2).
- Swivel the seat backrest (2) upwards.
- Swivel the seat backrest (2) into the horizontal position and hold it there.
- Engage seat belt tongue (4) into belt buckles (3) on the right and left.

Folding the seat backrest down to the seat position

- Slightly (2) raise the seat backrest, hold it in place and press the release

buttons ⑤ of the belt buckles ③ on the right and left.

- Swivel the seat backrest ② slightly upwards.
- Swivel the daybed down to the rear wall.
- Hook the retaining straps ① on the right and left of the seat backrest ②.

To pull out or push in bottom bunk

Pull seat cushion out into the reclined position:

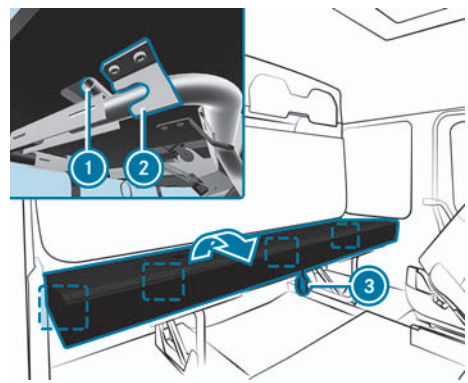

- Pull seat cushion forward using the loop ③.
- Hook brackets ② into the catches ①.

To slide seat cushion into the seat position:

- Lift seat cushion by the loop ③ and slide it backwards.

SoloStar Concept

Using the front passenger's seat and folding table

Danger

Risk of injury from the open folding table

Vehicle occupants could bump into the folding table and injure themselves.

- Close the folding table before each journey.

Danger

Risk of injury from unsecured items in the vehicle

If objects, luggage, or loads are not secured or not secured sufficiently, they could slip, tip over, or be thrown around and thereby hit vehicle occupants.

There is a risk of injury, particularly in the event of braking manoeuvres or abrupt changes in direction!

- Always stow objects in such a way that they cannot be thrown around.

- Before the journey, secure objects, luggage, or loads against slipping or tipping over.

- Keep loose objects stored in the stowage spaces and stowage compartments while the vehicle is in motion (→ Page 139).

Front passenger's seat and folding table

1. Corner seat
2. Folding table

Folding the folding table down

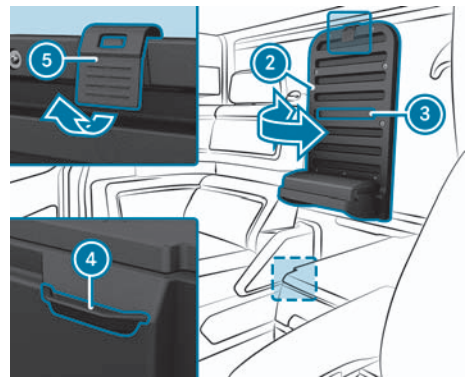

- Fold out support 3 on folding table 2 until it engages.
- Unclip rubber mount 5 from folding table 2.
- Fold down folding table 2.
- Place support 3 into recess 4 in the side trim of the drawer container.

Folding the folding table up

- Fold folding table 2 up and hook rubber mount 5 onto folding table 2.
- Fold in support 3.

Folding the bunk down/up

Danger

Risk of injury and death if the bunk is used while the vehicle is in motion

If the vehicle occupant is on a bunk while the vehicle is in motion, it will not be possible to restrain them.

- Only use the bunk while the vehicle is switched off.

Note

Damage to the bed and seats

When folding up and down, the bed can hit the seats and both components can be damaged.

- Fold the backrests of the driver's and co-driver's seats forwards or move the seats further forwards.

Note

Damage to the adjustable backrest and seats

If the adjustable backrest is folded up and you put the seat back, both components may be damaged.

- When resetting the seat, make sure that the adjustable backrest is lowered.
- Before folding up the adjustable backrest, move the seat forwards or fold the seat backrest forwards.

Note

Damage to the bunk or adjustable backrest

If the adjustable backrest is folded up and you place objects underneath it, components may be damaged when you fold the adjustable backrest down.

- Do not place any objects underneath the folded-up backrest.

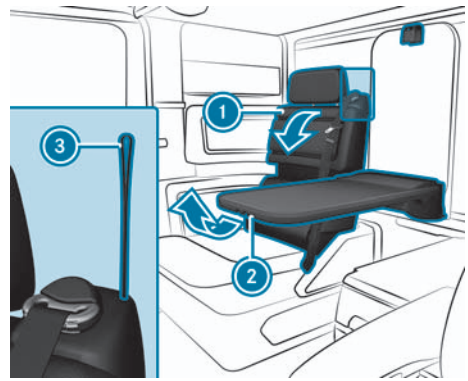

- Fold up folding table ②, clip the rubber mount to folding table ② and fold in the support.
- Pull loop ③ on front passenger's seat ①. The backrest on the front passenger's seat will now be unlocked.
- Fold down the seat backrest.

Folding the bunk down

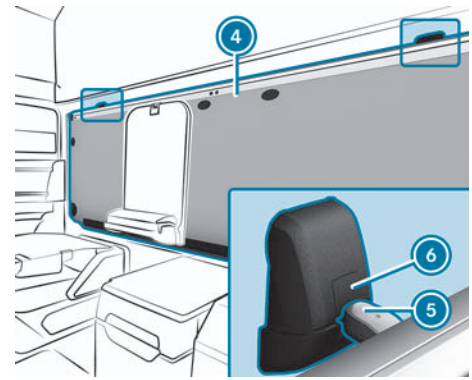

- Take note of the legal requirements for the country you are currently in before using the bunk during the journey.
- If the bunk is used during the journey: Setting up the safety net.

Note

You can find information on setting up the safety net and adjusting the head section in the section entitled "Bottom bunk" (→ Page 80).

- ► Push the bunk ④ against the rear panel.
- ► Press and hold catch ⑥.
- ► Detach rubber mount ⑤ from the wall bracket.
- ► Swing bunk ④ down.

Folding the bunk up

- ► Lower the head section of the bunk all the way.
- ► Fold up bunk ④ and push it against the rear panel.
- ► Push rubber mount ⑤ against catch ⑥ and clip it into the wall bracket.
- ► Fold the seat backrest back until it engages.

Bunks in the M-cab

Overview of bunks in the M cab

The following bunks may be fitted in the M cab:

- Bottom standard bunk / upholstered stowage space (→ Page 87)
- Bottom standard bunk, partitioned (→ Page 88)

Bottom standard bunk/upholstered stowage space

Danger

Risk of injury and death if the bunk is used while the vehicle is in motion

If the vehicle occupant is on a bunk while the vehicle is in motion, it will not be possible to restrain them.

- ► Only use the bunk while the vehicle is switched off.

Note

Damage to the bed and seats

When folding up and down, the bed can hit the seats and both components can be damaged.

- ► Fold the backrests of the driver's and co-driver's seats forwards or move the seats further forwards.

Folding the berth down

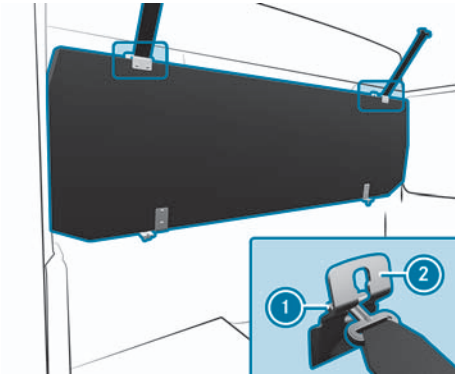

- ► Vehicles with standard bottom bunk: Move or fold the backrests of the driver's and front passenger's seats forwards.
- ► If necessary, slide the driver's and co-driver's seats an adequate distance forwards.
- ► Push the bed against the rear panel and hold.
- ► Turn hook ① 90° and unhook it from the wall brackets ②.
- ► Fold bunk downwards.

Fold the berth upwards

- Fold up the berth and push it against the rear panel and hold.
- Turn the hook ① 90° and attach it to the wall brackets ②.

Use bottom standard bunk (partitioned)

Danger

Risk of injury and death if the bunk is used while the vehicle is in motion

If the vehicle occupant is on a bunk while the vehicle is in motion, it will not be possible to restrain them.

- Only use the bunk while the vehicle is switched off.

Note

Damage to the bed and seats

When folding up and down, the bed can hit the seats and both components can be damaged.

- Fold the backrests of the driver's and co-driver's seats forwards or move the seats further forwards.

Folding the berth down

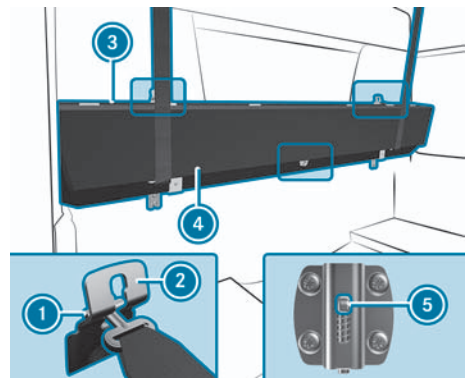

- Push the bed against the rear panel and hold.
- Turn the hooks ① 90° and unhook them from the wall brackets ②.
- Slide the locking slide ⑤ down.
  - ◁ The front ④ and rear ③ berth parts are no longer locked.
- Fold bunk downwards.
- Press the hook ① between the halves of the cushion.

Fold the berth upwards

- Fold up the berth and push it against the rear panel and hold.
- Hook the hooks ① into the wall brackets ② and turn them 90°.
- Press the front berth section ④ against the rear berth section ③ until the safety slide ⑤ engages.

Adjusting the multifunction steering wheel

Danger

Risk of accident when making significant adjustments while driving

You may lose control of the vehicle, in particular in the following situations:

- If you adjust the driver's seat, the head restraints, the steering wheel, or the mirror while the vehicle is in motion.
- If you fasten your seat belt while the vehicle is in motion.

- ► Before starting the vehicle: Adjust the driver's seat, head restraints, steering wheel, and mirror in particular, and fasten your seat belt.

Danger

Risk of accident due to unlocked steering wheel

If the steering wheel remains unlocked while the vehicle is in motion, it may adjust unexpectedly.

- ► Ensure that the steering wheel is locked before every journey.
- ► Do not unlock the steering wheel while the vehicle is in motion.

Requirements

- The vehicle is stationary.
- The parking brake is applied.

Observe the following when adjusting the steering wheel:

- First, adjust the seat to the correct position (→ Page 72).
- The angle of the steering wheel must be set as low as possible.
- After adjusting the steering wheel, the freedom of movement and steerability should be checked.

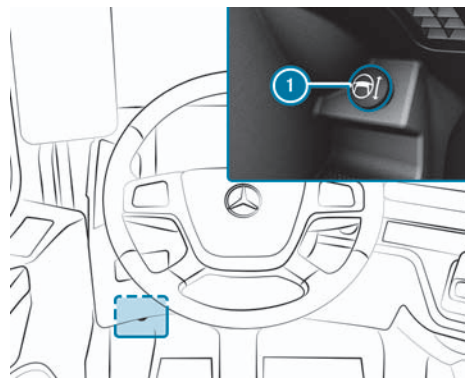

Steering column release in the driver's footwell

- ► Step on the 1 button and hold down.
  - ◁ The steering column is unlocked.
- ► Adjust the multifunction steering wheel height and angle.
- ► Remove your foot from button 1.
  - ◁ The steering column is locked.

Outside mirrors

Adjusts the outside mirrors

Danger

Risk of accident when making significant adjustments while driving

You may lose control of the vehicle, in particular in the following situations:

- If you adjust the driver's seat, the head restraints, the steering wheel, or the mirror while the vehicle is in motion.
- If you fasten your seat belt while the vehicle is in motion.
- ► Before starting the vehicle: Adjust the driver's seat, head restraints, steering wheel, and mirror in particular, and fasten your seat belt.

Danger

Risk of accident if the distance is misjudged when using the outside mirror

The outside mirrors reduce the size of the image. The objects in view are in fact closer than they appear.

- You should therefore always ascertain the actual distance of other road users by looking over your shoulder.

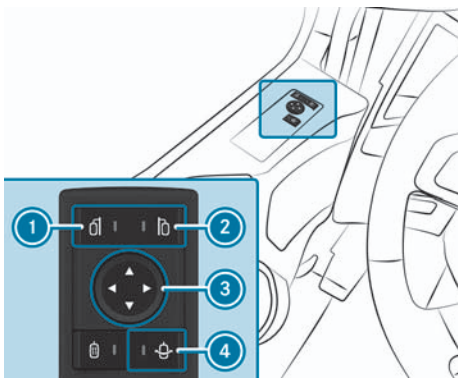

Driver's door switch panel

1. Left outside mirror
2. Right outside mirror
3. Adjust outside mirrors
4. Manoeuvring position for the outside mirrors

Adjust the front bumper-view mirror, kerb view mirror,and wide-angle mirror manually. In the manoeuvring position, the outside mirror on the front passenger's side can swivel outwards to allow you to see the trailer/semitrailer while manoeuvring. If the outside mirror is in the manoeuvring position, it can be adjusted horizontally.

- Switch on the vehicle.
- **To adjust the outside mirrors:** Press button for the left outside mirror or button for the right outside mirror.
  - ◁ The indicator lamp on the button comes on.
- Push the button forwards or backwards and on the right or left, until the outside mirror is in the correct position.
- **To swivel the outside mirrors into the manoeuvring position:** Press the button .
  - ◁ The indicator lamp on the button comes on. The front-passenger outside mirror will swivel outwards into the manoeuvring position.
- **To set the exterior mirrors to the manoeuvring position:** Push the button on the right or left until the outside mirror is in the correct position.
  - ◁ The manoeuvring position that was set is saved. If you press the button when next manoeuvring, the outside mirror will swivel into the last manoeuvring position selected.
- **To swivel the outside mirrors into the drive position:** Press the button .
  - ◁ The indicator lamp on the button will go out. The front-passenger outside mirror will swivel back into the drive position that you have set.

Activate/deactivate the mirror heater

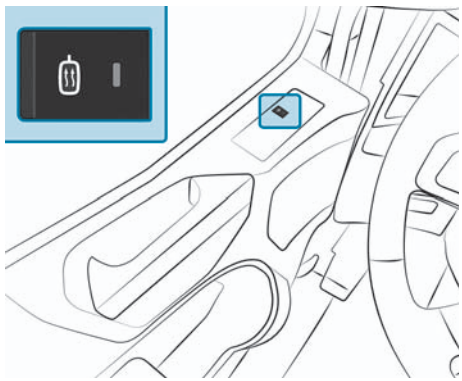

- Switch on the vehicle.
- **To switch on/off:** Press the button [ ].
  - When the indicator lamp on the button lights up, the mirror heater is switched on.

Note

If the mirror heater is switched on and the outside mirrors are swivelled to the manoeuvring position, the mirror heater will be deactivated. If the outside mirrors are swivelled to the drive position again, the mirror heater will be reactivated.

The ramp mirror is not heated.

MirrorCam system

Notes on the MirrorCam system

Danger

Risk of accident due to malfunction or system failure of the MirrorCam system

In the following cases, the system must be repaired before driving continues:

- complete failure of a display
- still images — despite moving objects in front of the camera
- lagged visualisation of the traffic situation

- Park the vehicle safely as soon as possible.
- Notify a qualified specialist workshop.

If only one of the two fields of vision in the display fails, the journey can be continued cautiously to the next workshop.

- Have the system repaired at a qualified specialist workshop.

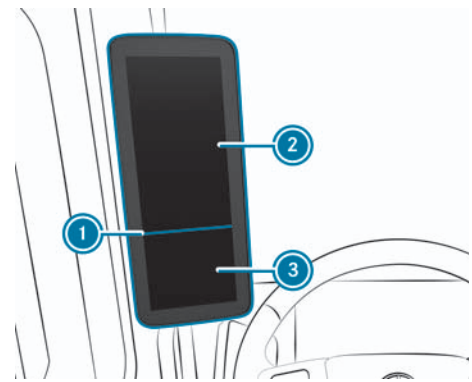

The MirrorCam system display is divided by status display (blue line) ① into areas ② and ③.

If status display ① is not shown in the display, there is a system error.

Depending on the temperature, no image is shown in the display in the following situations:

- The temperature measured on the display is approximately -18°C or below.
- The temperature measured on the display is approximately 67°C or higher.

In addition, a corresponding display message is shown in the instrument cluster.

The MirrorCam system display does not have a separate heating function.

In these cases the vehicle interior must be heated up or cooled down until the display shows an image.

If a display shows an unusual or faulty image, the system must be checked as soon as possible at a qualified specialist workshop and, if necessary, be repaired.

This includes, for example, the following display situations:

- distorted images
- clearly noticeable pixel errors, column or row failures
- no visible information, for example arrows when a field of view is moved when cornering (→ Page 98)
- contrast or colour changes

► If a monitor displays a blurry or unclear image, check if the camera lens is dirty. Clean the camera lens if necessary.

► Observe the notes on cleaning the MirrorCam camera in the section "Cleaning the sensors" (→ Page 421).

► If the displayed image does not improve as a result of this, have the system checked as soon as possible at a qualified specialist workshop.

Certain sunlight conditions (e.g., low sun) or light from another intense source can reduce the contrast of the display and cause glare. In such situations, objects in the display may be obscured or difficult to see.

► In these cases, be particularly attentive and adjust your driving behaviour accordingly.

Drivers must always wear the necessary personal visual aids required for them to drive a vehicle. Drivers with presbyopia (age-related long-sightedness) should, if necessary, wear visual aids with multifocal lenses to be sufficiently able to see traffic including via the displays.

► When cleaning the MirrorCam display, observe the notes on cleaning the interior (→ Page 412).

Function of the MirrorCam system

The MirrorCam system is used to replace legally prescribed mirror systems on the vehicle with electronic image detection and display systems. It assists you in keeping an overview of your vehicle and its surroundings.

The system is designed for forward travel in all speed ranges, for reversing and for vehicle standstill.

To optimise what is shown in the display, a distinction is made between the following driving situations:

- Forward travel

- Forward travel with left or right turning
- Reversing, including manoeuvring

The vehicle is equipped with one camera and one display on each side.

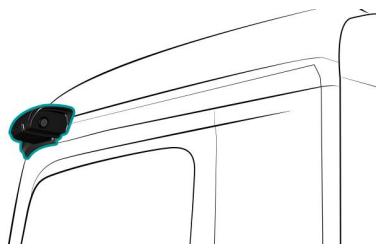

Camera arm (example: left-hand side of the vehicle)

Depending on the vehicle version, the camera arm can be folded.

Vehicles with folding camera arm:
To ensure the camera is in the correct operating position, a sensor is fitted in the camera arm. When the camera arm is folded forwards or backwards by more than 4°, the symbol [!] appears in the display.

Note

A fitted spring enables the camera arm to automatically return to the correct operating position in the event of minor deviations. In the event of larger deviations, it may be necessary to manually return the camera arm to the correct position.

The optical system of the camera is equipped with a heating function, which is automatically activated/deactivated depending on the temperature of the camera's sensor and the outside temperature. This avoids the accumulation of snow and ice in the area of the camera.

Alternatively, press the button [⏻] to manually switch the heating on/off (→ Page 94).

Note

Depending on the temperature signals it receives, the automatic control system can reverse manual activation or deactivation of the heating.

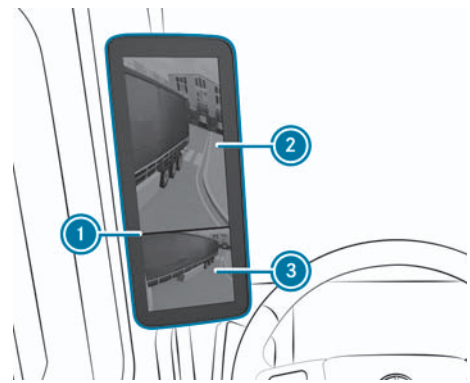

Display (example: left-hand side of the vehicle)

The display is divided in two by a status display (blue line) ①.

The field of view shown in the upper section of screen ② corresponds to the main mirror; the field of view in the bottom section ③ corresponds to the wide-angle mirror.

Operating the MirrorCam system

Automatic activation of the MirrorCam system

The system is automatically activated when the following occurs:

- Unlocking/opening the door
- Unlocking/opening the vehicle
- Switching on the vehicle

Note

Switching on the vehicle results in permanent activation.

Manual activation of the MirrorCam system

► Press the button .

◁ Within seven seconds of automatically or manually activating the system, the field of view (basic setting) is available to the driver in the display.

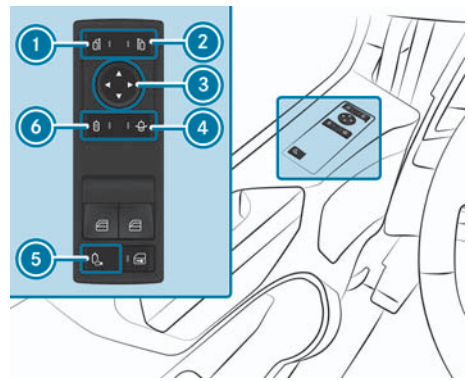

Driver's side door control unit

1. Selects display, left
2. Selects display, right
3. Sets field of view
4. Activate/deactivate automatic field of view/manoeuvring view
5. Manually activate system
6. Activates/deactivates camera heating

Buttons 1, 2, 4, and 6 are equipped with indicator lamps, which indicate the status of the function. The function is activated when the indicator lamp in the button is lit.

Standby mode and automatic deactivation

In the following cases, the MirrorCam system automatically switches to standby mode:

- two minutes after switching off the vehicle
- two minutes after the last time the button was pressed with the vehicle switched off

Note

Ten seconds before the system switches to standby mode, symbol is shown in the display.

In the following cases, the system that is in standby mode is reactivated:

- The button is pressed.
- A door is opened.

Note

When the system is activated from standby mode, an image is available to the driver in the display within one second.

After five minutes in standby mode, the system is automatically deactivated.

Adjusting the field of vision

Adjusting the back edge of the semitrailer/trailer

After switching on the vehicle or changing the semitrailer/trailer, the adjustable distance line (1) shown in the display can be moved to the end edge of the trailer/semitrailer.

For a more exact setting, it is recommended to place an object at the end of the vehicle on the ground and align the line with it.

Requirements:

- The symbol [ ] is shown in the display.
- The vehicle speed is less than 10 km/h.
- The automatic field of vision adjustment function is not active.

► Press the [ ] button forwards or backwards to move the line (1) shown in the display.
  ◁ The line in the display flashes.

► Storing the setting: Press the [ ] button right or left.
  ◁ The line shown in the display stops flashing.
  ◁ The setting is stored for both sides.

Note

The selected setting remains stored even after the vehicle is switched off. This way, the end edge must be reset only if the overall length changes, e.g. due to a different semitrailer/trailer or if there is an overhanging load.

Note

The semitrailer/trailer back edge is hidden when semitrailer tracking is active or if the field of view is manually set.

Note

If manoeuvring view has been activated, the semitrailer/trailer back edge is displayed elongated for better orientation.

Manual field of vision adjustment

The driver is able to move the field of view shown in the upper section of the display up, down, left, or right.

- **Manually adjusting the field of view:** Press the button for the left-hand display, or the button for the right-hand display.
  - ◁ The indicator lamp on the respective button comes on.
- Using the button, move the field of vision.
  - ◁ If the field of vision shown in the display deviates from the legally prescribed field of vision (basic setting), the or icon is shown in the display.

> **Note**
> If the manoeuvring view is activated, both fields of vision shown in the display are moved.

> **Note**
> The distance lines are hidden if the field of vision was set manually (→ Page 98).

- **Reset field of vision to basic setting:** Press the button for the left-hand display, or the button for the right-hand display.
  - ◁ The indicator lamp on the respective button comes on.
- Press and hold the button for approximately two seconds.
  - ◁ The field of vision is reset to the basic setting. When the legally prescribed field of vision is shown in the display again, the or icon flashes in the display for five seconds and then goes out.

> **Note**
> A manually set field of vision is reset to the default setting by switching off the vehicle.

Automatic field of view adjustment for forward travel (semitrailer tracking)

The automatic field of view adjustment function for forward travel is only possible on tractor/semitrailer combinations.

Requirements:

- The system detects a driving situation in which it is useful to adjust the field of view.
- The semitrailer is correctly connected to the towing vehicle (signal transmission).
- Automatic field of view adjustment is activated.

Automatic field of view adjustment only occurs in the upper section of the display.

Automatic field of view adjustment only occurs in the display of the inside side of the bend.

The function detects cornering manoeuvres in which an adjusted field of view is useful.

The influencing variables for the automatic field of vision adjustment are as follows:

- The swivel angle between the towing vehicle and the trailer/semitrailer
- The vehicle speed

- **Activating automatic field of view adjustment:** Press the button.

◁ The function is activated when the indicator lamp in the button is on.

The driver is shown an automatic field of vision adjustment by the symbol in the display for the relevant side.

Note

If automatic field of vision adjustment is active, no distance lines are shown in the display (→ Page 98).

During the automatic field of vision adjustment, an additional manual field of vision adjustment is possible. This allows, for example, the influence of different trailers on the position of the trailer end to be compensated for with active trailer tracking.

► Press the button for the left-hand display or the button for the right-hand display.

◁ The indicator lamp on the respective button will light up.

◁ The symbol (green right/left arrows) is shown in the display.

► Use the button to adjust the field of vision shown to the left or to the right.

◁ When the icon flashes in the display, the setting is stored. Automatic field of view adjustment continues to remain active.

Note

Manual field of vision adjustment can be reset to the basic setting by pressing the button for approximately two seconds.

Note

When driving without a semitrailer, it is necessary to deactivate the automatic field of view adjustment function.

► **Deactivating automatic field of view adjustment:** Press the button.

◁ The function is deactivated when the indicator lamp in the button goes off.

Manoeuvring view

The manoeuvring view assists drivers when manoeuvring by providing them with a better overview of the vehicle and its surroundings.

When the manoeuvring view is activated, the upper part of the display shows the immediate vehicle surroundings, while the lower part shows the more distant ones.

Note

Tractor/semitrailer combinations with attached semitrailer: When automatic field of vision adjustment has been activated, the system automatically switches to manoeuvring view when reverse gear is engaged.

Note
Manual activation of manoeuvring view is only possible below a vehicle speed of 10 km/h.

- **Activating manoeuvring view:** Press the button.
  - ◁ If manoeuvring view has been activated, the or icon is shown in the display.
  - ◁ The indicator lamp in the button also lights up.

Note
If manoeuvring view has been activated, an additional up or down manual adjustment of the fields of vision shown in the display is possible. For this, observe the "Manual field of vision adjustment" section.

Note
If manoeuvring view has been activated, the adjustable distance line is shown elongated in the display for better orientation (→ Page 98). The other distance lines are not displayed if manoeuvring view has been activated.

- **Deactivate manoeuvring view** Press the button.
  - ◁ The indicator lamp in the button goes out.

Note
When a vehicle speed of 10 km/h is exceeded during forward travel, the function is automatically deactivated.

Adjusting the display brightness

The brightness of the display is controlled automatically, depending on the brightness of the ambient light.

In addition, the driver has the option of manually adjusting the brightness of the display.

- In the multimedia system, in the Settings menu select the System, Display brightness menu item.
  - ◁ The brightness of the MirrorCam display can be adjusted separately for the driver's side and the front passenger's side.
- Select MirrorCam, driver or MirrorCam, front passenger and adjust the display brightness.

Overview of display situations in the display

There are some display options for the MirrorCam system which can be shown in the display to indicate driving conditions, system errors, and active functions.

Distance lines

The distance lines are shown in the basic setting of the field of view after the system start. These help you to better estimate speeds and distances to objects (e.g. vehicles).

Note

The line display is in an area of the display where no legally required field of view is shown.

Exemplary representation

Trailer/semitrailer back edge and distance lines

1. Adjustable distance line (→ Page 95)
2. Distance line
3. Distance line
4. Distance line

Note

The adjustable distance line 1 can be set after switching on the vehicle or changing the semitrailer/trailer (→ Page 95).

Note

The distances in which the distance lines 2, 3 and 4 are displayed are not adjustable and can vary depending on the topography of the roads driven on.

In the following cases, the distance lines are hidden in the display:

- when semitrailer tracking is active
- when the field of view has been set manually
- when manoeuvring view has been activated (2, 3 and 4 only)

Overtaking assistant

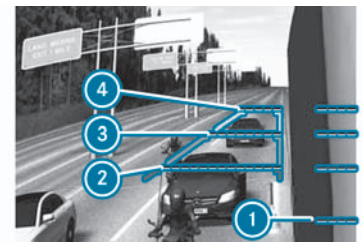

The overtaking assistant is an extended display of the distance lines. The function is intended to assist the driver when overtaking on roads with several lanes in the direction of travel.

Here, distance lines 2, 3 and 4 are extended outward accordingly.

The display appears on the relevant side when the turn signal indicator is activated starting at vehicle speeds above 30 km/h.

On the front passenger's side, the areas between the lines are also marked in colour.

Ten seconds after deactivating the turn signal indicator, or if the vehicle falls be-

low a speed of 25 km/h, the guide lines are hidden.

Explanation of the symbols in the display

Symbols in the display

	Sideguard Assist/Active Sideguard Assist warning (→ Page 291)
	Sideguard Assist/Active Sideguard Assist warning (→ Page 291)
	Automatic semitrailer tracking for forward travel active
	Manual setting during active automatic semitrailer tracking (flashes when storing the new setting)
	Displayed for ten seconds before the system switches to standby mode
	Displayed after system start or after changing the semitrailer/trailer Trailer/semitrailer end edge can be adjusted
	The display does not show the legally required field of vision
	The display now shows the legally prescribed field of vision (basic setting)
	(Green right/left arrows) Manual field of vision adjustment during active semitrailer tracking possible
	System without calibration (consult workshop)
	Vehicles with folding camera arm: Camera outside the operating position
	Manoeuvring view active (example, left side)

Note

Several symbols may be shown in the display simultaneously.

Note

In addition to the symbols in the MirrorCam display, the driver may be shown messages in the instrument cluster.

Exterior lighting

Lamp check

The lamp check is only an aid. Responsibility for the correct vehicle lighting in accordance with the legal requirements always rests with the driver.

All the vehicle's exterior lighting is electronically monitored. A malfunction in the exterior lighting is signalled to the driver via the indicator lamp in the instrument cluster.

- Observe the notes in the display messages in the instrument cluster.
- Have a second person check the vehicle lighting.

Depending on the configuration, you may be able to check the lighting with the electronic vehicle key (→ Page 53).

Exterior lighting menu

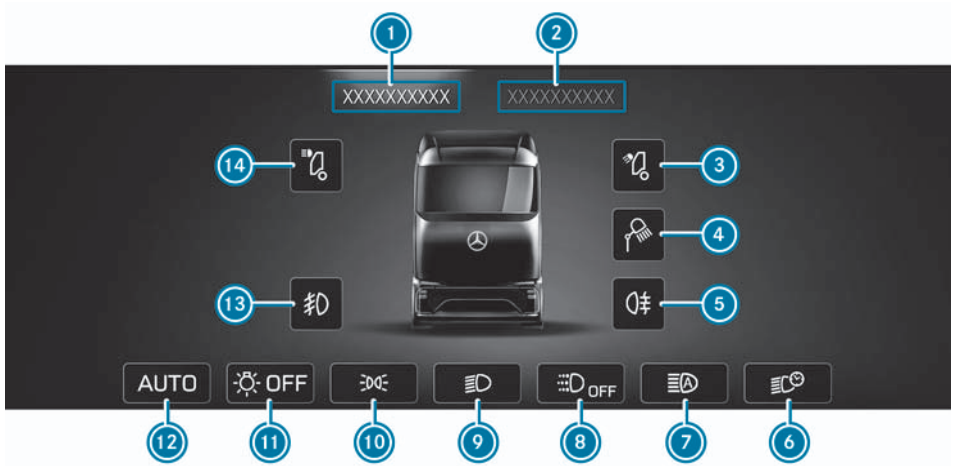

Exemplary representation

Overview of exterior lighting menu

1. Exterior lighting menu
2. Interior lighting menu
3. Roof position marker lamps
4. Work lamps
5. Rear fog light
6. Switch-off delay time setting
7. Adaptive Highbeam Assist
8. Switching on the daytime running lights
9. Dipped beam
10. Side lights
11. OFF Switching off exterior lighting
12. AUTO Automatic driving lights
13. Fog light
14. Additional headlights

Danger

Risk of accident if the exterior lighting is covered by the side board

If you open the rear side board, the rear exterior lighting is covered.

This could delay other road users in recognising the vehicle as an obstacle.

- Secure the rear area of the vehicle according to the national requirements, e.g. using a warning triangle.

Note

Depending on the vehicle's equipment, functions//buttons may not be present.

For the exterior lighting control, press the button below the multimedia display to access the lighting menu.

Then select the Exterior lighting (1) function to display the menu shown above.

Switch the exterior lighting on/off

The operation of the following exterior lighting components is described elsewhere:

- Main beam/headlamp flashing (→ Page 109)
- Rotating beacon (→ Page 111)
- Illuminated Mercedes star (→ Page 110)

You have the following options for operating the lighting menu:

- Pressing the desired function on the touchscreen of the multimedia system
- The right-hand button group on the multifunction steering wheel

A warning tone will sound in the following cases:

- You open the driver's door with the dipped beam switched on and the ignition lock in the radio position.
- You open the driver's door with the standing lights or dipped beam switched on and the ignition lock in the 0 position.

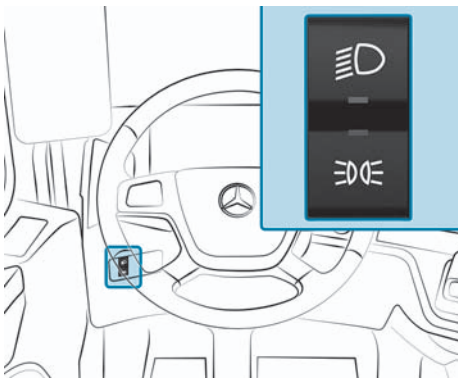

Standing lights/dipped beam button on the instrument panel

Multimedia system:

→ Lights ▶▶ Exterior lighting

Switching off the daytime driving lights (depending on equipment)

- **Switching off:** Press the button in the multimedia system.
  - ◁ The daytime running lights are switched off.
    When you set the vehicle in motion, the vehicle lighting is switched on automatically

depending on the light conditions.

Switching the parking lights on/off

► **Activation:** Press the button in the multimedia system (recommended).

or

► Press the lower section of the button on the instrument panel.
- ◁ The parking lights will be switched on.
- ◁ The indicator lamp on the button will light up.
- ◁ The indicator lamp in the instrument cluster comes on.

► **Switching off:** Press the OFF button in the multimedia system (recommended).

or

► Press button at the bottom of the instrument panel again.
- ◁ The parking lights will be switched off.
- ◁ The indicator lamp in the button goes out.
- ◁ The indicator lamp in the instrument cluster will go out.

Switching dipped beam on/off

Note

The dipped beam is asymmetrical. In countries in which traffic does not drive on the same side of the road as in the country where the vehicle is registered, there is a risk of dazzling other drivers. Parts of the headlamps must therefore be masked when you are driving in such countries (→ Page 126).

► **Switching on:** Press the button in the multimedia system.

or

► Press button at the top of the instrument panel.
- ◁ The dipped beam will be switched on.
- ◁ The indicator lamp on the button will light up.
- ◁ The indicator lamp on the button will light up.
- ◁ The indicator lamp in the instrument cluster will come on.

► **Switching off:** Press the button OFF in the multimedia system.
- ◁ If one of the following conditions is met, the display shows the confirmation window Do you want to switch off the lights? before switching off.
  - The parking brake is released.
  - The front fog lamps are switched off (depending on the equipment).
  - When night mode is active.

► Swipe right to confirm.
- ◁ The dipped beam will be switched off.
- ◁ The indicator lamp in the button goes out.
- ◁ The indicator lamp in the button goes out.
- ◁ The indicator lamp in the instrument cluster goes out.

Vehicles with manual headlamp range adjustment: When the dipped beam is engaged for the first time, or after the vehicle has been switched on or started, the instrument cluster will show the display message HEADLAMP RANGE CONTROL..

If the illumination of the road is not sufficient or oncoming traffic is being dazzled:

- Change the setting shown by pressing the button ∧ or ∨ in the multimedia system. When you are driving a laden vehicle, the illumination of the road must be 40 m to 100 m and the low beam must not dazzle oncoming traffic. When the vehicle is unladen, select level 0.

Switching off exterior lighting

- Press the OFF button in the multimedia system.
  - ◁ When night mode is active: The message Do you want to switch off the lights? is shown in the display.
- Swipe right to confirm.
  - ◁ The exterior lighting will be switched off.

Switching automatic driving lights on/off

Danger

Risk of accident when the dipped beam is switched off in poor visibility

If the function AUTO is activated, the dipped beam will not switch on automatically if there is fog, snow. or other causes of poor visibility such as spray.

- In these situations, manually switch on the dipped beam.

The automatic driving lights are only an aid. The responsibility for vehicle lighting rests with the driver.

- **To switch on:** Press the AUTO button in the multimedia system.
  - ◁ The automatic driving lights will be switched on.
  - ◁ The dipped beam and standing lights will be switched on or off automatically depending on the light conditions.
  - ◁ The indicator lamp on the button AUTO will light up.
  - ◁ If the dipped beam has been automatically switched on, the indicator lamp in the instrument cluster will light up.
- **Switching off:** Press the button OFF in the multimedia system.
  - ◁ When night mode is active: The message Do you want to switch off the lights? is shown in the display.
- Swipe right to confirm.
  - ◁ The indicator lamp in the button AUTO goes out.

Note

If the vehicle is switched off manually or automatically (→ Page 223), the vehicle lighting switched on by the automatic driving lights will also be switched off. If necessary, switch the vehicle lighting on manually.

Note

If the rain and light sensor is malfunctioning, the dipped beam and parking lamps will be switched on automatically and stay on.

Switching Adaptive Highbeam Assist on/off

- Press the button [ ] in the multimedia system.
  - ◁ When the indicator lamp on the [ ] button lights up, the function is switched on.

Note

Observe notes on the function and operation of vehicles with Adaptive Highbeam Assist (→ Page 108).

Switching fog lights on/off

- **Activation:** Press the [ ] button in the multimedia system.
  - ◁ The front fog lights will be switched on.
  - ◁ The [ ] indicator lamp on the instrument cluster will come on.
- **Switching off:** Press the [ ] button again.
  - ◁ The front fog lights will be switched off.
  - ◁ The [ ] indicator lamp in the instrument cluster goes out.

Switching rear fog light on/off

Note

When the front fog lights are switched off and you switch the rear fog light on, both functions will be switched on.

- **Activation:** Press the button [ ] in the multimedia system.
  - ◁ The rear fog light will be switched on.
  - ◁ The [ ] indicator lamp on the instrument cluster will come on.
- **Switching off:** Press the [ ] button again.
  - ◁ The rear fog light will be switched off.
  - ◁ The [ ] indicator lamp in the instrument cluster goes out.

Activate/deactivate additional headlamp

Note

Find out about the legal requirements for the country in which you are currently driving before using additional headlamps on public roads.

- Press the button [ ] in the multimedia system.
  - ◁ The additional headlamps will be switched on.

Switching the position lamps on the roof on/off

- Press the button [ ] in the multimedia system.
  - ◁ The position marker lamps on the roof will be switched on.

Switching the work lamp on

- Press the [ ] button in the multimedia system.

◁ The work lamps will be switched on.

Note
The work lamps will be switched off after you pull away.

Setting the delayed switch-off time of the exterior lighting (surround lighting)

▶ Press the button in the multimedia system.
◁ The multimedia system displays the current setting.
▶ Set the switch-off delay time.

Cornering light and manoeuvring light function

Cornering light

If the low beam is switched on, the cornering light will improve the illumination of the carriageway in the turning direction.

The cornering light will switch on automatically in the following situations:

- You are travelling at a speed below around 25 km/h and are indicating or turning the multifunction steering wheel.
- You are travelling between around 25 km/h and 40 km/h and turn the multifunction steering wheel.

The cornering light may stay lit up for a short time but will be switched off automatically after a maximum of around three seconds.

Manoeuvring light

If you shift into reverse gear with the dipped beam switched on, the illumination in front of the vehicle is improved when the steering the vehicle.

- Vehicles with static main headlights: Both fog lamps are switched on.
- Vehicles with matrix LED headlights: Additional light modules in the main headlights are switched on.

Intelligent Light Performance function

Intelligent Light Performance is only available for vehicles with matrix LED headlights.

The matrix LED headlights adapt to the driving and weather situation and offer extended functions for improved illumination of the carriageway.

The system consists of the following functions:

- Cornering light
- Extended fog light
- City light
- Intelligent main beam

Function of cornering light

The function improves the illumination of the carriageway in the area inside the bend over a wide angle enabling, for example, better visibility on tight bends.

If you drive between approx. 40 km/h and approx. 60 km/h with the dipped beam switched on and turn the steering

wheel, the cornering light is activated automatically.

Extended fog light

The function improves the illumination of the edge of the carriageway.

The function is active in the following cases:

- When the rear fog light is switched on
- If the windscreen wipers are activated for a longer period of time with a fast wiping interval

City light

The city light improves the illumination on the sides in urban areas by means of a wider light distribution.

The function is active in the following cases:

- At speeds typical for inner-city traffic
- In lit up areas in urban areas

Intelligent main beam

The Adaptive Main Beam Assist function is extended by the following functions:

- Partial main beam
- BOOST main beam

Observe the notes on Adaptive Main Beam Assist (→ Page 108).

Partial main beam

If the main beam is activated during automatic control of the main beam by Adaptive Main Beam Assist and other road users are detected, the system switches to the partial main beam function.

The partial main beam shines past other road users with the main beam and does not dazzle them. The vehicle in front or oncoming vehicle is in the dipped beam illumination area.

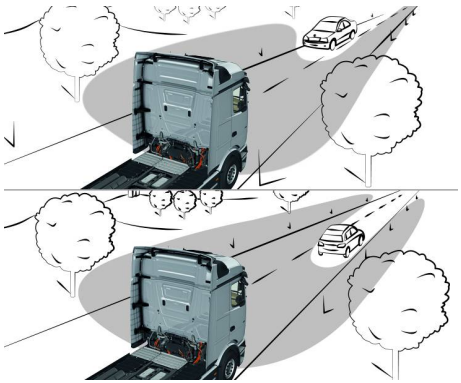

Partial main beam active function (example)

BOOST main beam

If the traffic situation permits, the system automatically switches on the BOOST main beam function at speeds above approx. 35 km/h.

The BOOST main beam function increases the brightness of the light cone for greater visibility in the dark.

Depending on the traffic situation or at a speed below approx. 27 km/h, the function is deactivated automatically.

Adaptive Highbeam Assist

How Adaptive Highbeam Assist works

Danger

Risk of accident despite Adaptive Highbeam Assist

Adaptive Highbeam Assist does not recognise:

- Road users without lights, e.g. pedestrians
- Road users with poor lighting, e.g. cyclists
- Road users whose lighting is obstructed, e.g. by a crash barrier
- Crossing road users

An overtaking vehicle will not be detected by Adaptive Highbeam Assist until it is directly in front of your own vehicle.

On very rare occasions, Adaptive Highbeam Assist may fail to recognise other road users with their own lighting, or may recognise them too late.

In these or in similar situations, the automatic main beam will therefore not be deactivated, or will be activated nevertheless.

▶ Always observe the road and traffic conditions carefully and switch off the high beam in good time.

Depending on their illumination and the road and traffic conditions, it is possible to identify cyclists and crossing traffic, but this is not guaranteed.

▶ Monitor the traffic situation attentively and manually switch off the high beam if necessary.

Adaptive Highbeam Assist is only an aid. Responsibility for correctly adjusting the vehicle's lighting to the prevailing light, visibility, and traffic conditions always rests with the driver.

Vehicles with Adaptive Highbeam Assist are equipped with a camera behind the windscreen.

The system detects the following traffic situations:

- Illuminated vehicles travelling in front
- Illuminated oncoming vehicles

When the system detects other road users, the high beam will automatically be deactivated. This will prevent other road users from being dazzled.

In vehicles with matrix LED headlights, the partial main beam function is activated (→ Page 106).

When the system no longer detects any other vehicle, it will reactivate the main beam.

The following influences may also lead to automatic activation/deactivation of the high beam:

- The light conditions
- Vehicle speed

System limits

Adaptive Highbeam Assist cannot take into account road, weather, or traffic conditions.

The system may be impaired or may not function in the following situations:

- If visibility is poor, e.g. due to snow, rain, fog, or heavy spray.

- If the windscreen in the area of the camera is dirty, misted up or damaged.
- if the windscreen in the area of the camera is obscured, for example, due to a faulty windscreen wiper or a sticker.
- If the carriageway is very narrow and winding.
- If detachable parts, e.g. a snow plough, restrict the camera's view of the lane markings.
- After a major change in load with the vehicle switched on.

► Therefore, start the vehicle again after a significant change in load, so that Adaptive Main Beam Assist is available without any restrictions.

► Keep the windscreen around the camera free of dirt, snow, or ice.

► Use the windscreen wipers, or clean the windscreen manually wherever necessary. See the sections entitled "Notes on external cleaning" (→ Page 415) and "Cleaning sensors" (→ Page 421).

If the system is malfunctioning, the main beam will be switched off. The driver will be notified of the malfunction by a display message displayed in the instrument cluster.

► If necessary, switch on the high beam manually.

Switching Adaptive Main Beam Assist on/off

The function can be activated/deactivated (→ Page 101) in the multimedia system in the menu Lights under the menu item Exterior lighting.

If Adaptive Main Beam Assist is activated, the [≡D] indicator lamp in the instrument cluster lights up.

If the Adaptive Main Beam Assist has automatically switched on, the [≡D] indicator lamp in the instrument cluster lights up.

Combination switch

Using the high beam and headlamp flashing

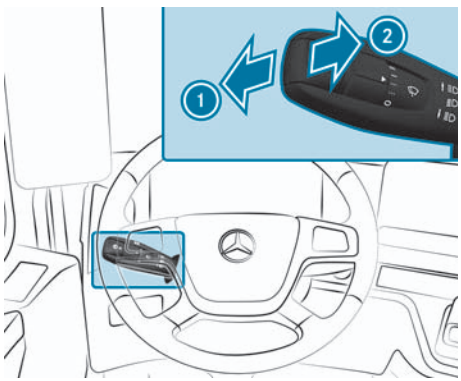

► Switch on the vehicle.

Switching on high beam

► Switch on dipped beam [≡D].

► Press the combination lever in the direction of arrow 1 and latch into place.

◁ The indicator lamp [≡D] in the instrument cluster comes on.

Vehicles with Adaptive Highbeam Assist

The high beam can be controlled automatically.

- ► Switch on Adaptive Highbeam Assist [≡Ⓐ] (→ Page 108).
- ► Switch on dipped beam [≡D].
- ► Press the combination lever in the direction of arrow ① and latch into place.
  - ◁ The high beam will be switched on/off automatically depending on the situation .
  - ◁ The indicator lamp [≡Ⓐ] in the instrument cluster comes on (when high beam is OFF).
  - ◁ The indicator lamp [≡Ⓐ] in the instrument cluster comes on (when high beam is ON).
- ► **Headlamp flasher:** Briefly pull the combination lever in the direction of arrow ②.
  - ◁ The indicator lamp [≡D] in the instrument cluster and the high beam will come on briefly.

Using the turn signal indicators

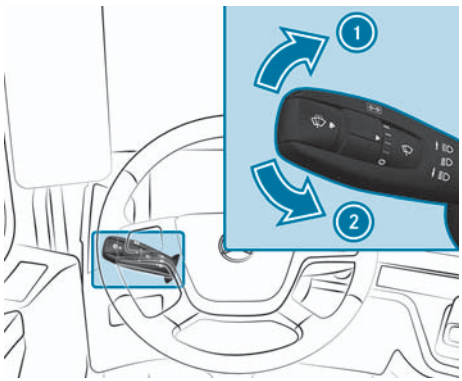

- ► **To indicate:** Push the combination lever upwards to indicate right ①, or downwards to indicate left ② until it engages.
  - ◁ The corresponding turn signal lamps and indicator lamp [▷] or [◁] in the instrument cluster will flash.
- ► **To flash briefly:** When you are overtaking or changing lanes, briefly tap the combination lever in the desired direction to indicate right ① or indicate left ②.
  - ◁ The corresponding turn signal lamps and indicator lamp [▷] or [◁] in the instrument cluster will flash five times.
- ► **To cancel the flash:** Briefly tap the combination lever in the opposite direction.

Switch the illuminated Mercedes star on/off

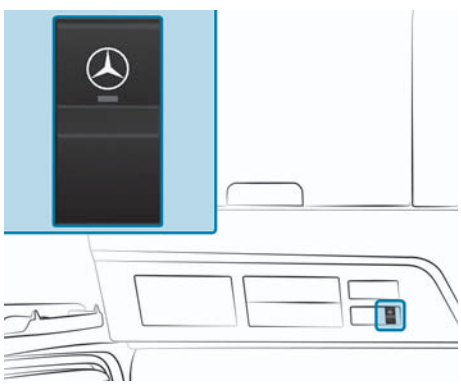

The illuminated Mercedes star on the maintenance flap is approved exclusively for use on private land. Use on public roads is prohibited.

According to legal conditions, differences from the use of the illuminated Mercedes star described here are possible in some countries.

- Observe the legal requirements for your current location.
- **Activation:** Press the [⊛] switch at top.
  - ◁ The indicator lamp in the switch [⊛] comes on.
- **Deactivation:** Press the lower section of the switch [⊛].
  - ◁ The indicator lamp in switch [⊛] goes off.

Switch the rotating beacon on/off

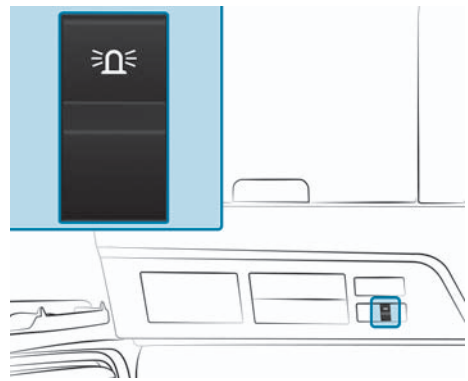

Rotating beacon button (example)

- **Activate/deactivate:** Press the button [⊛].

When driving the vehicle with a rotating beacon, observe the legal requirements in the country in which you are currently driving.

If the required field of view is not clear due to being obstructed by trailers, bodies, or attachments, safeguard the vehicle by using additional lights.

Interior lighting

Operating the interior lighting

Multimedia system:

→ Lights » Interior lighting

Overview of interior lighting menu

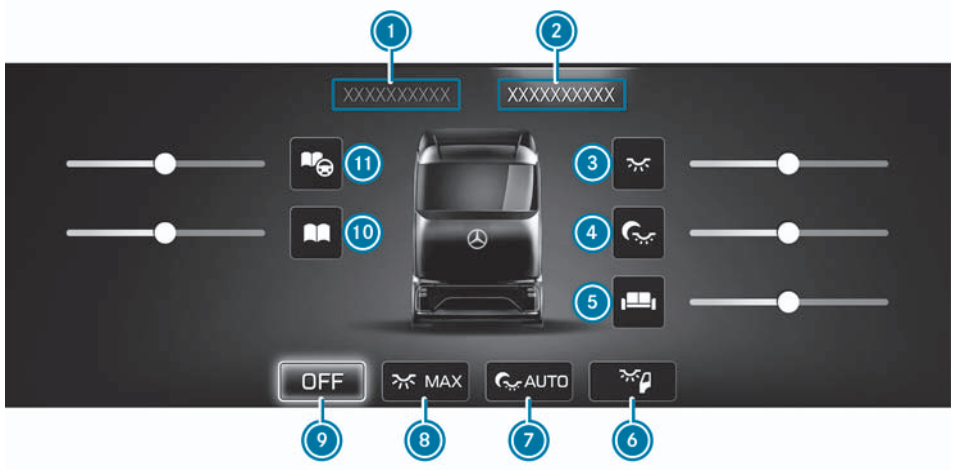

Example illustration

Interior lighting menu

1. Exterior lighting menu
2. Interior lighting menu
3. Interior lighting
4. Night lighting
5. Ambient living area light
6. Automatic interior lighting control
7. AUTO Controls night lighting automatically
8. MAX Interior lamps and reading lamps
9. OFF Switches off all interior lighting
10. Front passenger's reading lamp
11. Driver's reading lamp

- Press the button below the multimedia display to access the lighting menu.
- Select the Interior lighting (2) function.
  - ◁ The menu shown above will be displayed.

Note

You can switch the various functions of the interior lighting on/off by pressing the corresponding button. You can also move a controller to the left or right to dim the corresponding lighting.

Note

Depending on the vehicle's equipment, functions/buttons may be omitted.

You have the following options for operating the lighting menu:

- Pressing the desired function on the touchscreen of the multimedia system
- Right-hand button group on the multifunction steering wheel

Overview of interior lighting switch

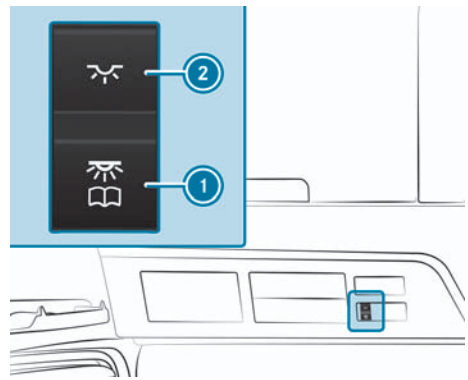

Switch panel above the windscreen (variant 1)

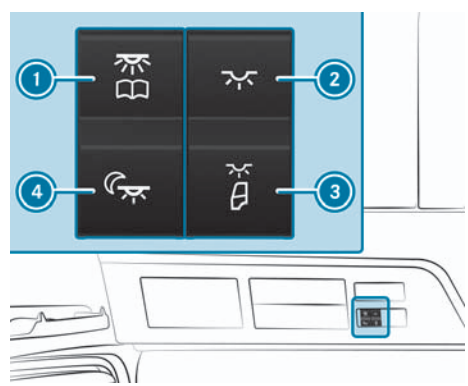

Switch panel above the windscreen (variant 2)

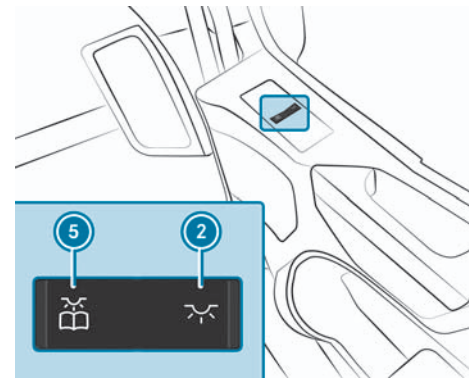

Front-passenger's door switch panel

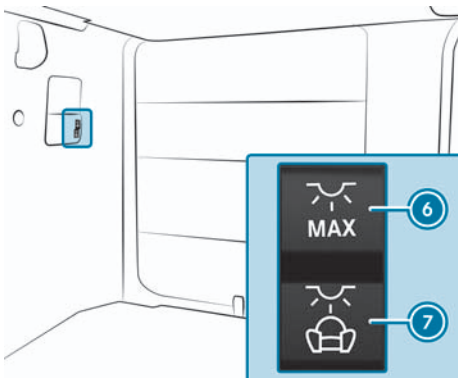

Bunk/daybed switch panel with reading lamp (example: bottom daybed)

Interior lighting switch

1. Switches the driver's reading lamp on/off or dims it
2. Switches the interior lamps on/off or dims them
3. Switches automatic interior lighting control on/off
4. Switches night lighting on/off
5. Switches on/off or dims the front passenger's reading lamp
6. Switches the interior lamps and reading lamps on/off or dims them
7. Switches the ambient living area light on/off or dims it

► Press a button to switch the relevant lighting on/off.

Interior lamps

Depending on the vehicle's equipment, there are the following options for controlling the interior lighting:

- Interior lighting menu item of the multimedia system
- Button 2 as described in the following

► **To switch on:** Briefly press the 2 button.
  ◁ The interior lamps will be switched on but dimmed.

► **To dim:** Press and hold the 2 button.
  ◁ The brightness of the interior lamps is adjustable from 0 to 100%. When the interior lighting has reached maximum brightness, the brightness will decrease again. When the interior lighting has reached maximum dimming, the brightness will increase again. If you drive at above 30 km/h, the brightness will be dimmed down automatically.

► **Switching off:** Press 2 button again briefly.
  ◁ The interior lights are switched off.

► **Switching on/off with bedbunk switch panel:** Press the button 6.
  ◁ The interior lighting of the cab is switched on or off.

Automatic interior lighting control

Depending on the vehicle's equipment, you have the following options for activating/deactivating the function:

- Interior lighting menu of the multimedia system
- Button 3 as described in the following

► **To switchon/off using the button:** Press the 3 button until a brief acoustic signal sounds.
  ◁ When the driver's door or front passenger's door is opened and the interior lamps and surround lighting switch on automatically,

the automatic control is activated.

Driver's/front passenger's reading lamp

Depending on the vehicle's equipment, you have the following options for controlling the function:

- Interior lighting menu of the multimedia system
- Button 1 or 5 as described below

► **To switchon/off using the button:** Briefly press button 1 for the driver's reading lamp or button 5 for the front passenger's reading lamp.
  ◁ The corresponding reading lamp lights up.

► **To dim:** Press and hold 1 button for the driver's reading lamp or 5 button for the front passenger's reading lamp.
  ◁ Once the reading lamp has reached maximum brightness, the brightness will decrease again.
  ◁ When the reading lamp has reached maximum dimming, the brightness will increase again.

Bunk/daybed reading lamp

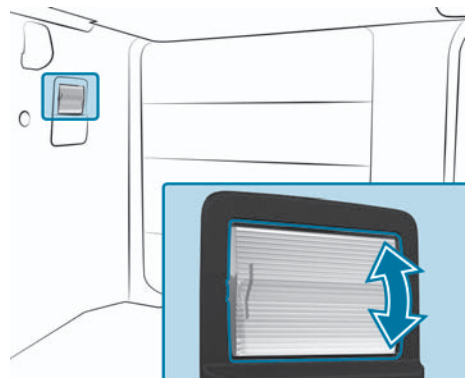

Bunk/daybed reading lamp (example)

► **Activation:** Press the lower section of the reading lamp lens.

► **Switching off:** Press the upper section of the reading lamp lens.

Night lighting

The night lighting provides non-dazzle ambient lighting while you are driving.

Depending on the vehicle's equipment, you have the following options for controlling the function:

- Interior lighting menu of the multimedia system
- Button 4 as described in the following

► **To switchon/off using the button:** Press the button 4.

Ambient living area light

The ambient living area light serves as interior lighting when the vehicle is parked.

Depending on the vehicle's equipment, you have the following options for controlling the function:

- Interior lighting menu of the multimedia system
- Button 7 as described in the following

► **To switchon/off using the button:** Briefly press the 7 button.

► **To dim:** Press and hold the 7 button.

◁ Once the ambient living area light has reached maximum brightness, the brightness will decrease again.
◁ When the ambient living area light has reached the maximum dimming level, the brightness will increase again.

Replacing bulbs

Notes on changing a bulb

Daimler Truck AG recommends that you have the headlamp bulbs changed at a qualified specialist workshop.

Danger

Risk of burns from hot component parts whilst replacing a bulb

Bulbs, lamps, and plugs can become very hot during operation.

When replacing a bulb, you may burn yourself on these component parts.

► Allow the component parts to cool down before replacing the bulbs.

A bulb may explode in the following cases:

- You touch the bulb when it is hot.
- You drop the bulb.
- You scratch the bulb.

► Do not use a light bulb that has been dropped or whose glass bulb is scratched.

► Protect bulbs from moisture during operation and do not allow bulbs to come into contact with liquids.

Bulbs and lights are a major element in vehicle safety. Therefore, it is important to ensure that all light bulbs are always functioning. The lamp check can help you when you are inspecting the bulbs (→ Page 100).

Note

Daimler Truck AG recommends that you also change the corresponding bulb in the other headlamp when a bulb for the low beam or high beam fails. Daimler Truck AG recommends that you use long-life bulbs for this.

When changing lamps, the following points should also be noted:

► To prevent a short circuit, switch off the lighting system and the vehicle before changing the bulb.
► Wear protective goggles and clean gloves.
► Always replace faulty bulbs with certified new bulbs with the correct wattage and voltage.
► New light bulbs should only be touched with a clean, lint-free cloth or similar material. Do not work with wet or oily fingers.
► Check the contacts for corrosion and clean them if necessary.
► Ensure that seals are seated correctly and replace damaged seals.
► If the new bulb does not come on, consult a qualified specialist workshop.

Vehicles with LED front headlamps: In the event of a fault to the lamps, contact a qualified specialist workshop.

Vehicles with rear LED lamp unit: The LED module can only be replaced as a whole.

► If necessary, have the LED module replaced at a qualified specialist workshop.

The following bulbs should also only be replaced at a qualified specialist workshop:

- LED daytime running lamps
- LED perimeter lamp, front
- LED turn signal lamp
- Lamps for ambient lighting in the cab
- LED interior lamps
- LED night light

Bulbs

Front bulbs

Turn signal light, front	PY21 W 24 V
High beam	H1 24 V
Daytime running lights	H21W 24 V
Dipped beam (halogen headlamps)	H7 24 V
Turn signal light, side; side marker light	P21/5 W 24 V
Fog light	H11 24 V
Position lamp (halogen headlamps)	W5W 24 V
Roof position marker lamps	R10W 24 V

Rear bulbs

Turn signal light, rear; brake light; reversing light; rear fog light	P21W 24 V
Rear light, number plate lamp, position lamp	R5W 24 V

Interior lighting bulbs

Dome lamp: Interior light	P18W 24 V
Dome lamp: Reading lamp	R10W 24 V
Dome lamp: Night lighting	EBS-R4 1.2W 24 V
Bunk/berth reading lamp (luminescent tube)	10W 24 V
Stowage compartment lighting under berth	W5W 5 W 24 V
Stowage compartment lighting above windscreen (luminescent tube)	5W 24 V

Additional bulbs

Side marker lights	LED module
Work lamp, top	H11 24 V
Work lamp, bottom	H3 24 V
Rotating beacons	H1 24 V

Replacing front bulbs

Swivelling out headlamps (variant 1)

Cover next to headlamp

► Press on the cover next to the headlamp at the location marked by an arrow.

◁ The cover will fold out.

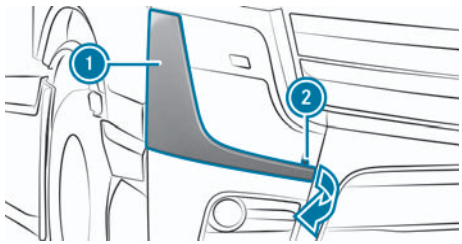

- Unscrew screw 2.
- Tilt bumper section 1 outwards in the direction of the arrow.

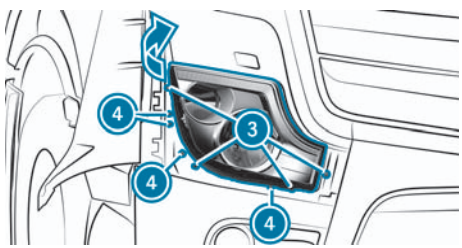

- Unscrew the screws with grey washer 3. Do not turn the adjustment screws 4 of the headlamp. Otherwise, the headlamp will have to be readjusted.
- Swing the headlamp out in the direction of the arrow.

Note
Do not lean on the headlamp that you have swung out.

Swivelling out headlamps (variant 2)

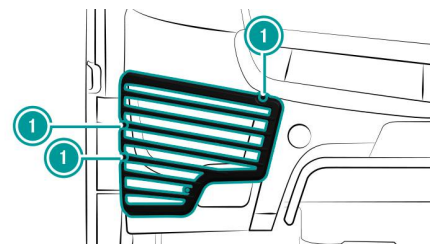

Protective grille (example)

- If the vehicle is fitted with protective grilles in front of the headlamps, loosen screws 1 and remove the protective grille.

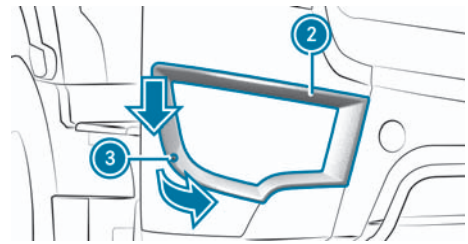

- Unscrew screw 3.
- Push outer cover frame 2 downwards, tilt forwards in the direction of the arrow and remove.

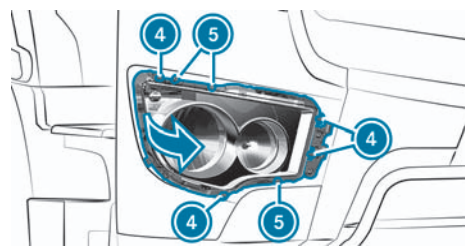

- Unscrew the screws with grey washer 4. Do not turn the adjustment screws 5 of the headlamp. Otherwise, the headlamp will have to be readjusted.
- Swing the headlamp out in the direction of the arrow.

Note
Do not lean on the headlamp that you have swung out.

Dipped beam and position lamp (halogen headlamp)

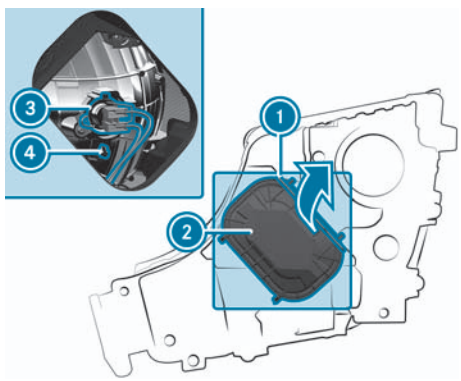

Halogen headlamp (variant 1)

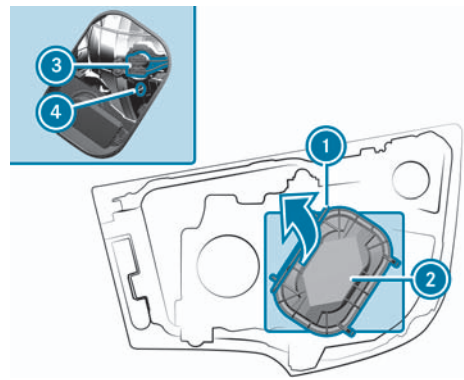

Halogen headlamp (variant 2)

- Observe the notes on changing a bulb (→ Page 116).
- Swivel out the headlamp (variant 1 or variant 2).
- Press clips ① in the direction of the arrow.
- Remove the cover ②.
- **Dipped beam:** Remove the connector from bulb ③.
- Disengage the safety spring.
- Remove the bulb ③.
- Insert the new bulb in the socket so that the base fits in the recess.
- **Position lamp:** Press on the side of socket ④ and pull the socket out.
- Pull the bulb out of the socket.

Main beam

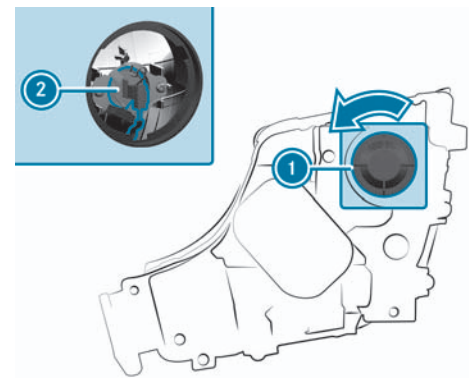

Headlamp (variant 1)

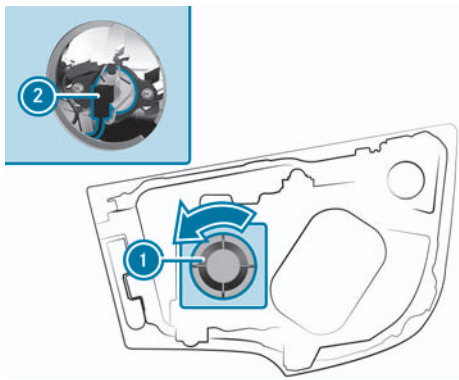

Headlamp (variant 2)

- Observe the notes on changing a bulb (→ Page 116).
- Swivel out the headlamp (variant 1 or variant 2).
- Turn cover ① anticlockwise and remove.
- Remove the connector from bulb ②.
- Disengage the safety spring.
- Remove the bulb ②.
- Insert the new bulb in the socket so that the base fits in the recess.

Daytime running lights

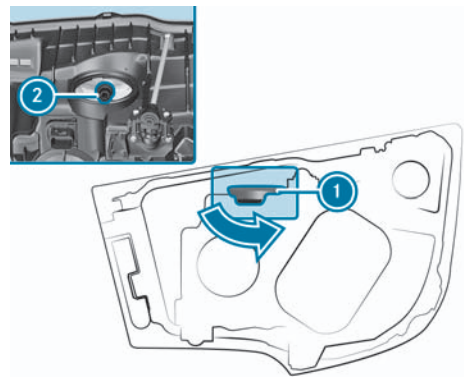

Headlamp (variant 2)

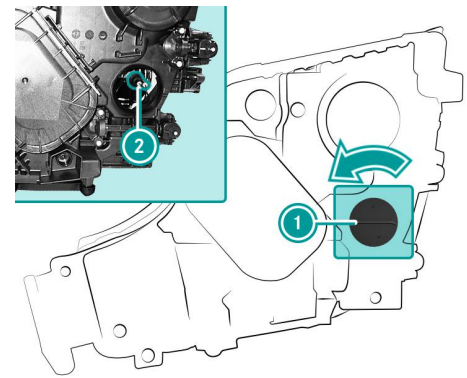

Headlamp (variant 3)

- Observe the notes on changing a bulb (→ Page 116).
- Swivel out the headlamp (variant 1 or variant 2).
- Turn cover ① anticlockwise and remove.
- Gently turn the socket for bulb ② anticlockwise and remove.
- Gently turn bulb anticlockwise and remove.
- Insert the new bulb into the socket and gently turn it clockwise.

Turn signal light

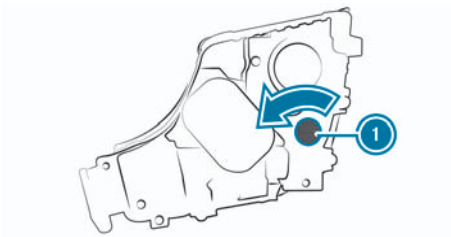

Headlamp (variant 1)

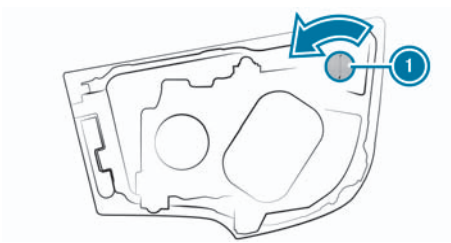

Headlamp (variant 2)

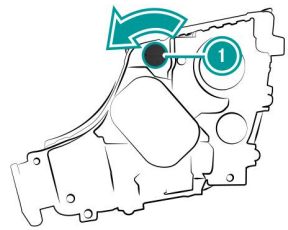

Headlamp (variant 3)

- Observe the notes on changing a bulb (→ Page 116).
- Swivel out the headlamp (variant 1 or variant 2).
- Gently turn socket (1) anticlockwise and remove.
- Gently turn bulb anticlockwise and remove.
- Insert the new bulb into the socket (1) and gently turn it clockwise.

Turn signal light, side; side marker light

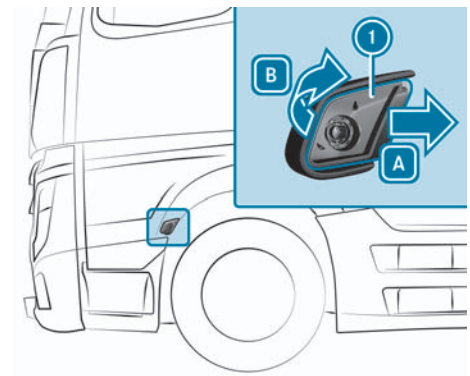

Turn signal light and side marker light (example)

- Observe the notes on changing a bulb (→ Page 116).
- Pull lamp (1) backwards [A] and unclip at the front with a twisting motion [B].
- Gently turn bulb mount anticlockwise and remove.
- Gently turn bulb anticlockwise and remove.
- Insert the new bulb in the bulb mount and gently turn it clockwise.

Front fog light (variant 1)

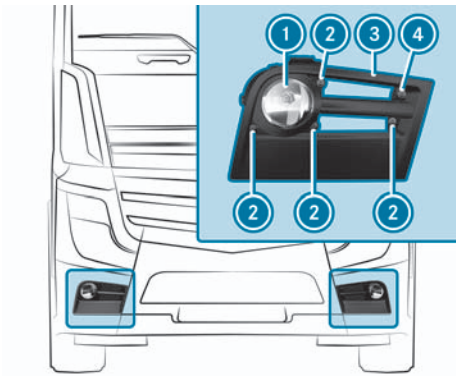

Front fog lamp (example: Actros)

- Observe the notes on changing a bulb (→ Page 116).
- Unscrew screw 4 of faceplate 3.
- Unclip faceplate 3 at the top and bottom and remove.
- Unscrew screws 2 of front fog lamp 1.
- Pull front fog lamp 1 out slightly.
- Remove the connector from the bulb for the front fog lamp 1.
- Pull front fog lamp 1 out.
- Unscrew bulb anticlockwise from reflector.
- Insert the new bulb and screw it into the reflector in a clockwise direction.

Front fog lamp (variant 2)

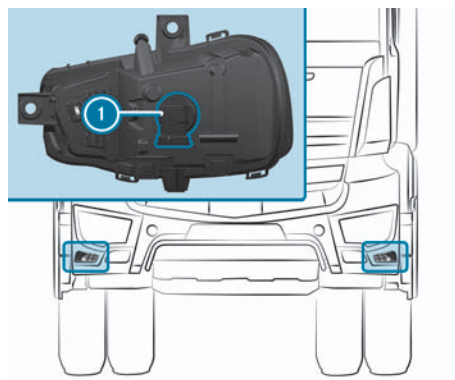

Front fog lamp (example: front fog lamp with LED daytime running lamp in the Arocs)

Note

If front fog lamp 1 is removed with the LED daytime running lamp, do not change the illuminant of the LED daytime running lamp. If necessary, have the illuminant changed at a qualified specialist workshop.

- Observe the notes on changing a bulb (→ Page 116).
- Swing out the headlamp.
- Remove the connector from the bulb 1 for the front fog lamp.
- Unscrew bulb 1 anticlockwise from reflector.
- Insert the new bulb and screw it into the reflector in a clockwise direction.

Roof position marker lamps

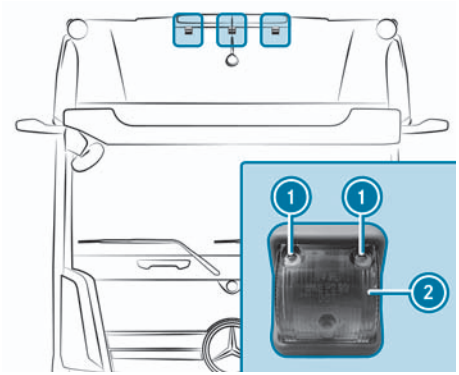

Roof position marker lamps

- Observe the notes on changing a bulb (→ Page 116).
- Unscrew screws (1).
- Remove lens (2).
- Gently turn bulb anticlockwise and remove.
- Insert the new bulb in the bulb mount and gently turn it clockwise.

Replacing rear bulbs

Swinging the protective grille out of the way

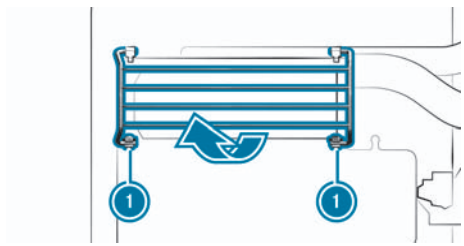

- Unclip the protective grille from the clamps (1) and swing it upwards.

Replacing bulbs

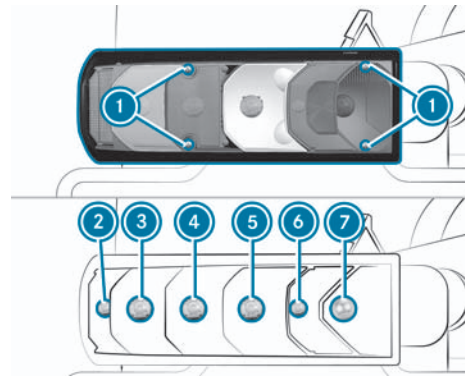

6-chamber lamp unit, rear left (example)

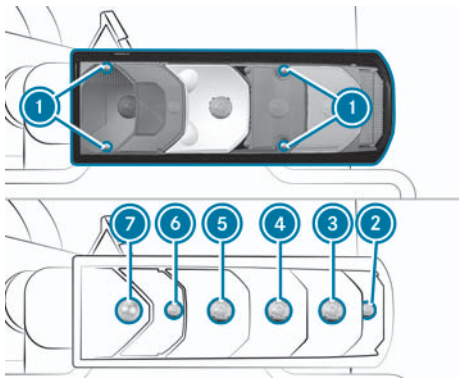

6-chamber lamp unit, rear right (example)

Rear lamp unit

1. Screws
2. Clearance light/side marker light
3. Turn signal light
4. Brake light
5. Reversing light
6. Tail light
7. Rear fog light

The number plate lamp is behind the reflector unit.

Vehicles with rear LED lamp unit: The LED module can only be replaced as a whole.

If necessary, have the LED module replaced by a qualified workshop.

- ► Observe the notes on changing a bulb (→ Page 116).
- ► Unscrew screws (1).
- ► Remove the lens.
- ► Gently turn the bulb anti-clockwise and remove it.
- ► Insert the new bulb and gently turn it clockwise.
- ► Insert the lens.
- ► Screw in screws (1).

Replacing interior lighting bulbs

- ► Observe the notes on changing a bulb (→ Page 116).

Bed/bunk reading lamp

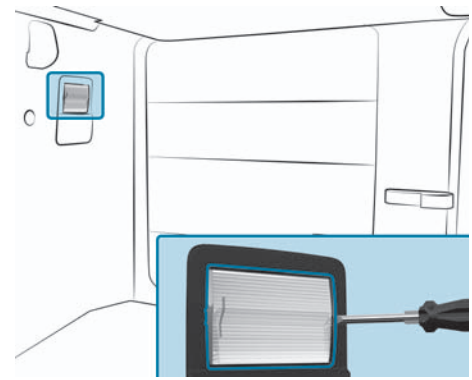
Bed/bunk reading lamp

- ► Push the lens out of the pivot hinge using a screwdriver.
- ► Remove the bulb.
- ► Insert the new bulb.
- ► Attach the lens.

Changing additional bulbs

- ► Observe the notes on changing a bulb (→ Page 116).

Side marker lamps

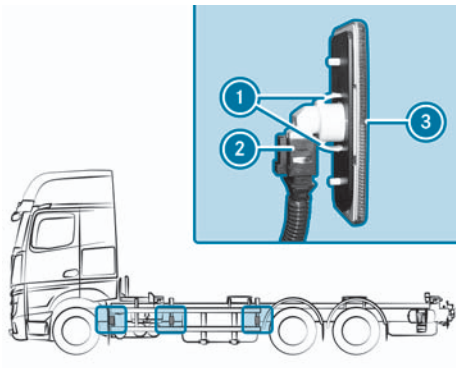

Side marker lamps (example)

Note

Semitrailer truck: Fold the side trim outwards before you change the side marker lamp (→ Page 396).

- Press and firmly hold the retainer on cable connector ② with a screw-driver.
- Pull out cable connector ②.
- Press retainers ① on side marker lamp ③ together and hold them firmly.
- Replace side marker lamp ③.

Work lamp, top

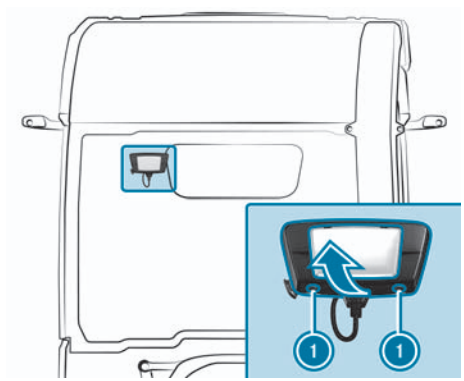

Work lamp (example)

- Press safety buttons ① and swing the housing up.

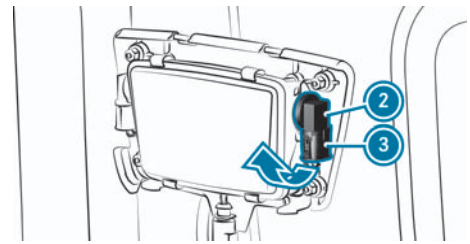

Bulb with cable connector (example)

- Turn bulb ② with cable connector ③ up and remove it.
- Press the retainer on cable connector ③ together and hold it firmly.
- Pull out cable connector ③.
- Replace the bulb ②.

Work lamp, bottom

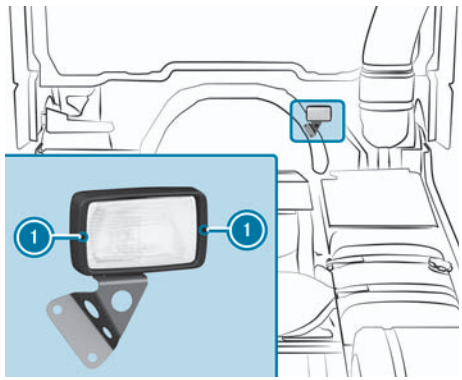

Work lamp (example)

- Loosen screws 1.
- Remove the reflector with frame.

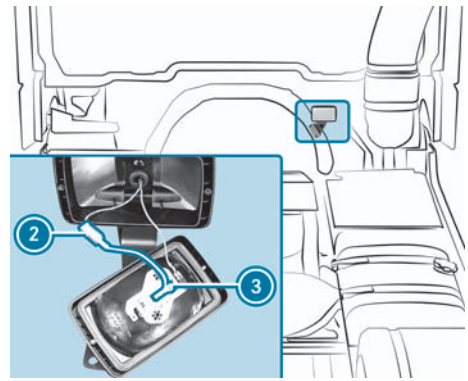

- Pull out cable connector 2.
- Disengage the safety spring.
- Remove the bulb 3.
- Insert the new bulb in the socket so that the base fits in the recess.

Partially masking headlights – left-hand/right-hand traffic

Note

Damage to the headlamps when removing the adhesive film

If you use sharp or pointed objects to remove the adhesive film on the headlamps, you may damage them.

- Do not use sharp or pointed objects to remove the adhesive film.

- When you are using the vehicle in other countries, observe the legal requirements for the country you are currently in.

The responsibility for vehicle lighting rests with the driver.

In countries that drive on the other side of the road to the country of registration, measures are required so that oncoming traffic is not dazzled, depending on the headlamp installed.

Measure at border crossing

Headlamp type	Measure
LED headlamps (L1G) in vehicles with L cab	No action required
LED headlamps (L1G) with ProCabin	Before crossing the border, mask halogen headlamps as close to the border as possible in accordance with the following Daimler Truck AG specifications. Make adhesive strips using a commercially available, opaque self-adhesive foil, and mask the relevant areas of the headlamp. When making the return journey, remove the adhesive strips as closely to the border as possible.
Matrix LED headlamps (L1K)	When crossing borders with changing traffic directions, change the traffic direction set in the multimedia system in the Functions ▶▶ Assistance systems ▶▶ Traffic direction menu as closely as possible to the border.
Halogen head-lamps	Before crossing the border, mask halogen headlamps as close to the border as possible in accordance with the following Daimler Truck AG specifications. Make adhesive strips using a commercially available, opaque self-adhesive foil, and mask the relevant areas of the headlamp. When making the return journey, remove the adhesive strips as closely to the border as possible.

With the masked headlamps, the edge of the carriageway will no longer be illuminated as far or as high.

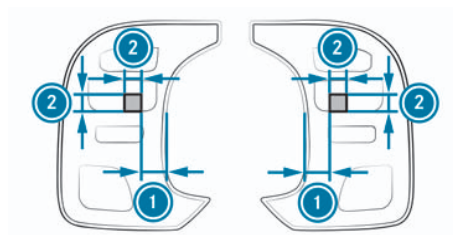

Masking area for ProCabin vehicles with static LED headlights (L1G)

Dimensions for masking the headlights

1. 65 mm
2. 40 mm

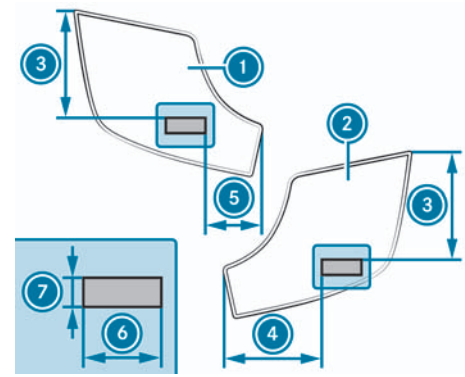

Masking area for right-hand traffic vehicles when used in countries with left-hand traffic (example: halogen headlamps, variant 1)

Partially masking headlights – left-hand/right-hand traffic

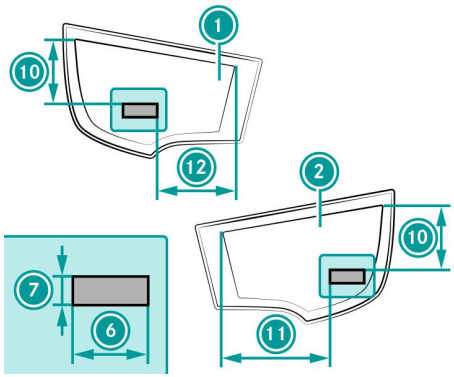

Masking area for right-hand traffic vehicles when used in countries with left-hand traffic (example: halogen headlamps, variant 2)

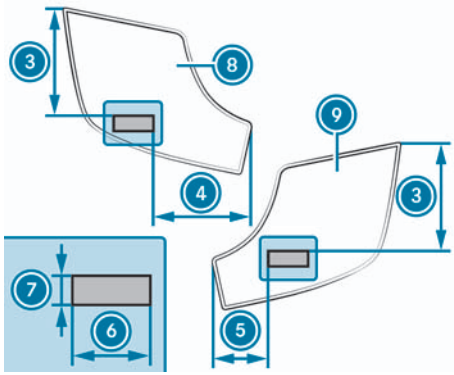

Masking area for left-hand traffic vehicles when used in countries with right-hand traffic (example: halogen headlamps, variant 1)

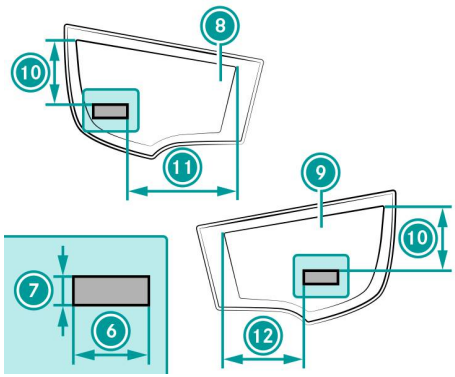

Masking area for left-hand traffic vehicles when used in countries with right-hand traffic (example: halogen headlamps, variant 2)

Dimensions for masking the headlights

1. Right headlamp
2. Left headlamp
3. 235 mm
4. 210 mm
5. 130 mm
6. 80 mm
7. 30 mm
10. 140 mm
11. 260 mm
12. 175 mm

Dimensions for masking the headlights

3. 235 mm
4. 210 mm
5. 130 mm
6. 80 mm
7. 30 mm
8. Right headlamp
9. Left headlamp
10. 140 mm
11. 260 mm
12. 175 mm

Good visibility

Using the windscreen wipers

Note

Damage to the windscreen on vehicles with a rain sensor

In dry weather, dirt or optical factors may cause the windscreen wipers to make unwanted wiping movements. This may damage the wiper rubbers or scratch the windscreen.

- Switch off the windscreen wiper in dry weather.

Note

Damage to the windscreen caused by the windscreen wipers being activated when starting a new journey

If the windscreen wipers are not switched off before parking the vehicle, this may cause the windscreen wipers to make unwanted wiping movements when starting a new journey. This may damage the wiper blades or windscreen, particularly if the windscreen is dirty or covered with ice.

- Switch off the windscreen wipers before parking the vehicle.

Worn or damaged wiper blades can cause smearing on the windscreen. This can cause malfunctions in vehicles with a rain sensor.

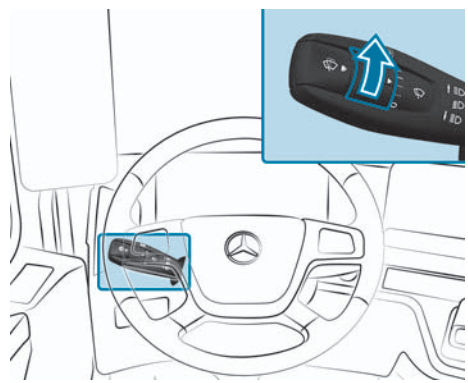

Wiper switch on the combination switch

0	Windscreen wipers off
•••	Slow intermittent wiping or wiping with the rain sensor
••••	Fast intermittent wiping or wiping with the rain sensor
—	Continuous wiping, slow
=	Continuous wiping, fast

- **Activation:** Switch on the vehicle.
- Turn the wiper switch to the desired position depending on the intensity of the rain.

Vehicles with rain sensor: If the ••• or •••• setting is used, the appropriate wipe frequency will be set depending on the precipitation. In the position ••••, the rain sensor is more sensitive than in the position •••, causing the windscreen wipers to wipe more frequently. If the rain sensor fails, the windscreen wiper will automatically switch to the wiping interval corresponding to the position of the switch.

Using the windscreen washer system

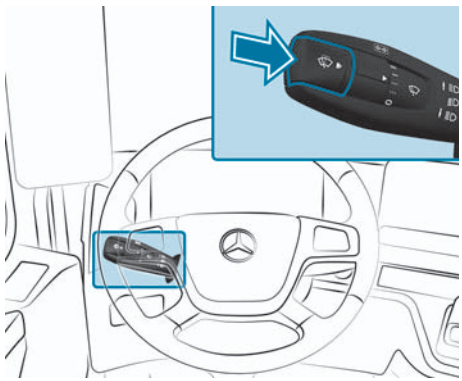

Combination switch (example)

- **Single wipe:** Briefly press the button.
- **Wiping with washer fluid:** Press and hold the button.

Switch the windscreen heater on/off

The windscreen heater is ready for operation when the vehicle is started and switches off automatically after approx. 15 minutes.

- **Activate/deactivate:** In the multimedia system, from menu Climate control, press button .
  - ◁ When the indicator lamp on the button comes on, the windscreen heater function is switched on.

Notes on winter operation

Headlamps

Note

Damage to the headlamps when removing ice

If you use an ice scraper to remove ice and snow from the headlamp, you may scratch the plastic cover of the headlamp.

- Use a de-icer spray suitable for plastic covers.

Windscreen wipers

- At temperatures of approximately 5°C to -5°C and during snowfall, direct the air to the windscreen (position or) using the air distribution control (→ Page 152).

You can also switch on the windscreen heater. With these settings, the wiper blades on the windscreen will be heated. You can thereby prevent smearing or the snow freezing on the wiper rubber.

Power supply

Using the battery disconnect switch (vehicles without ADR classification)

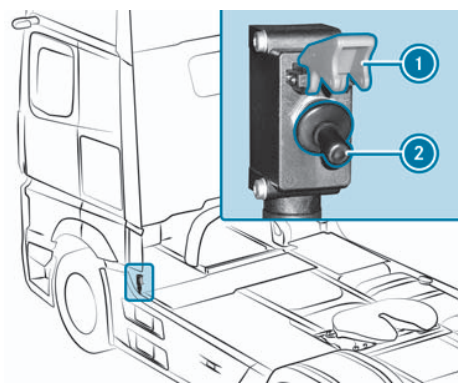

Example: Battery disconnect switch

You can interrupt the power supply to the starter batteries using the battery disconnect switch. Do this if the vehicle will not be used for an extended period of time.

The battery disconnect switch must only be actuated when the ignition and all electrical consumers in the vehicle are switched off.

To ensure that there are no malfunctions and that no control units are damaged, you must wait approximately five minutes after having switched off the vehicle before interrupting the voltage supply using the battery disconnect switch.

Interrupting the power supply

- Park the vehicle safely.
- Switch off the vehicle.
- Vehicles with anti-theft alarm system: Deactivate the anti-theft alarm system (→ Page 57).
- Vehicles with auxiliary heating: Switch off the auxiliary heating (→ Page 155).
- Wait for approximately five minutes.
- Swivel the cover (1) upwards.
- Swivel the switch (2) upwards.
  - ◁ All consumers other than the digital tachograph are disconnected from the batteries.

Reconnecting the power supply

- Swivel the cover (1) downwards.

Using the battery disconnect switch (vehicles with ADR classification)

Danger

Risk of accident as a result of deactivation of the MirrorCam system when operating the battery disconnect switch

The MirrorCam system will no longer work if you disconnect the power supply using the battery disconnect switch. As a result, you will not be able to monitor the traffic situation behind the vehicle when getting out.

- If possible, use the battery disconnect switch on the chassis frame.
- Take particular care when getting out the vehicle if the battery disconnect switch in the interior has been operated.

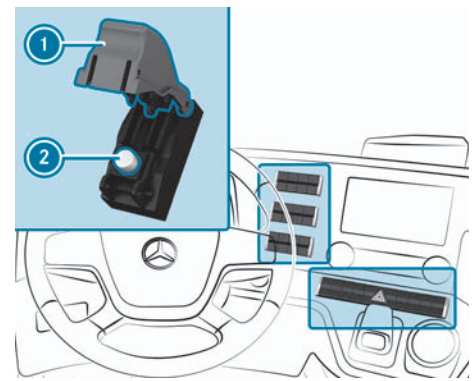

Battery disconnect switch in the vehicle interior (example)

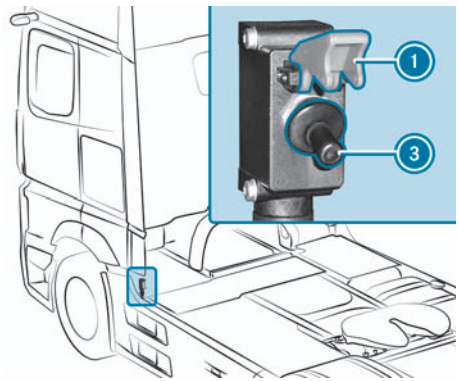

Battery disconnect switch on the chassis (example)

The voltage supply can be interrupted using the battery disconnect switches. This prevents short circuits that may generate sparks which might, in turn, cause a fire or an explosion. Vehicles for hazardous material transport are equipped with one or two battery disconnect switches depending on the ADR classification regarding the interruption of the voltage supply.

Use the battery disconnect switches, for example when loading the vehicle in a hazardous goods area.

Interrupting the power supply with the battery disconnect switch functions only when the vehicle is stationary. If you attempt to interrupt the power supply while the vehicle is in motion, the instrument cluster shows the display message Only disconnect the battery when stationary.

Interrupting the power supply

- Park the vehicle safely.
- Switch off the vehicle.
- Vehicles with anti-theft alarm system: Deactivate the anti-theft alarm system (→ Page 57).

If the auxiliary heating is switched on, wait for the auxiliary heating run-on phase to end.

- Swivel the cover (1) upwards.
- Pull out switch pin (2).

or

- Swivel the switch (3) upwards.
  - ◁ It takes up to ten seconds from the disconnecting procedure until the power supply is interrupted.

The hazard warning lights switch on automatically during the disconnection process.

All consumers other than the digital tachograph are disconnected from the batteries.

Note

If the hazard warning lights are not switched on automatically after the battery disconnect switch has been actuated, disconnection may not be possible. In this case, the instrument cluster shows a corresponding display message.

Reconnecting the power supply

- Press the cover (1) downwards.

Note

If the vehicle's power supply cannot be restored, the cause may be a discharged battery. To restore the power supply in this case, the battery must first be supplied with power by jump starting (→ Page 490). Jump starting via the

jump-start connection point is not possible if the power supply is interrupted.

Overview of 12 V/24 V sockets

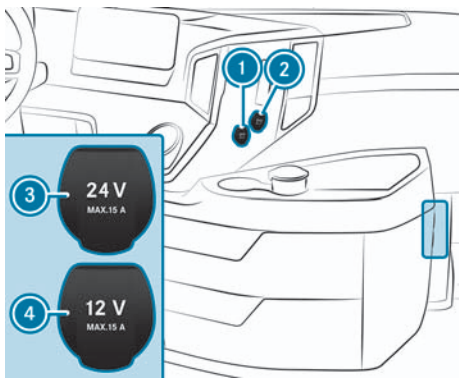

Example: sockets in the cockpit

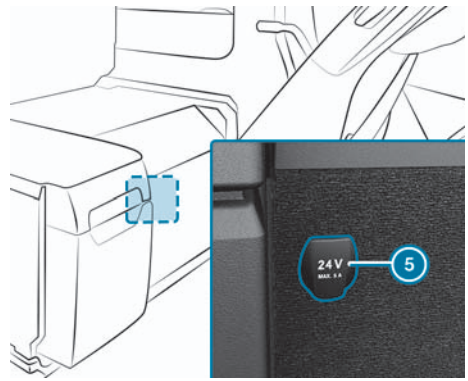

Example: socket in the stowage compartment

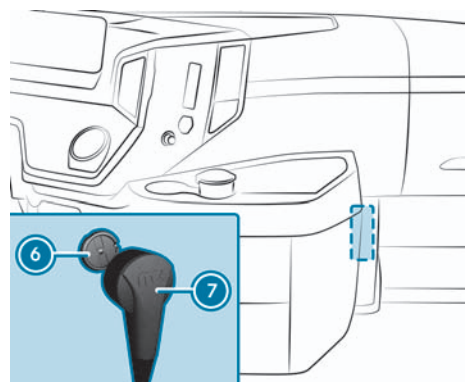

Example: 24 V power socket

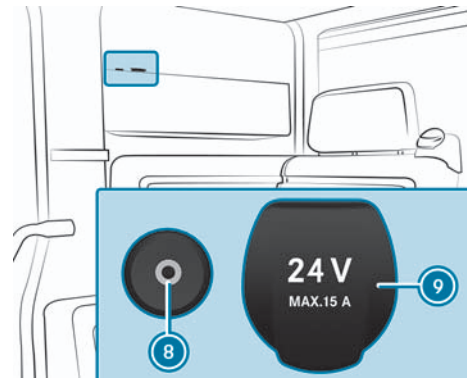

Example: AUX socket/socket

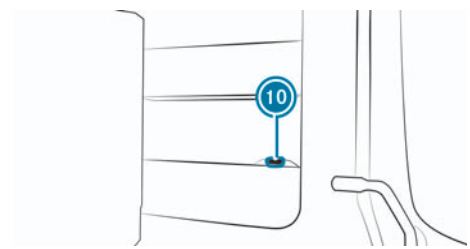

Example: socket in the lower bunk

Sockets

1. Cigarette lighter 5 A (max. 120 W) or 24 V socket 15 A (max. 360 W)
2. 24 V socket 15 A (max. 360 W), electric circuit 1

③ 24 V socket 15 A (max. 360 W), electric circuit 2
④ 24 V socket 15 A (max. 360 W), electric circuit°2 or 12 V socket 15 A (180 W)
⑤ 24 V socket 15 A (max. 360 W), electric circuit°1
⑥ 24°V power socket 25°A (max.°600°W)
⑦ Adapter plug 24°V power socket
⑧ AUX socket
⑨ 24 V socket 15 A (max. 360 W), electric circuit°2
⑩ 24 V socket 15 A (max. 360 W), electric circuit°2

12 V sockets

You must not exceed the maximum permissible load of 180 W (15 A) on the 12 V socket.

Vehicles with 12 V outlet for secondary consumers: If you would like to use the 12 V socket, you must switch on the voltage converter.

24 V sockets

You can use each 24 V socket for accessories up to max. 15 A (max. 360 W).

If you are using multiple 24 V sockets at the same time, a maximum total load of 360 W (15 A) must not be exceeded.

Vehicles without cigarette lighter: A 24 V socket ① is installed in place of the cigarette lighter.

Note

To use the 24 V socket, you must switch on the vehicle.

24 V power socket

You can use 24 V power socket ⑥ for accessories up to max. 600 W (25 A) independently of how the other sockets are used. For use of the 24 V power socket ⑥, Daimler Truck°AG recommends having adapter plug ⑦ fitted to your accessory at a qualified specialist workshop. Otherwise, safe usage cannot be guaranteed.

Using a 12 V voltage converter

The voltage converter supplies the 12 V socket and the 12 V connection point for auxiliary consumers with a maximum total of 15 A.

If you need to connect other devices, contact a qualified workshop.

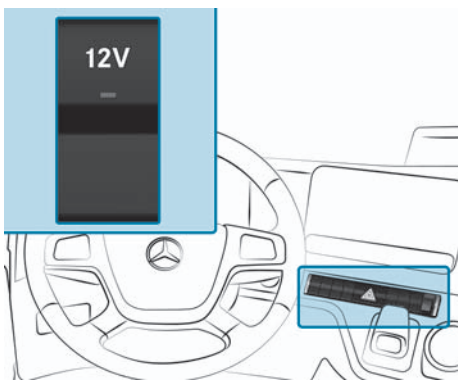

Vehicles with a 12 V connection point for secondary consumers:

► **Switching on/off:** Press the 12 V button above.
◁ When the indicator lamp in the button 12 V lights up, the 12 V

sockets and the 12 V connection point for secondary consumers are supplied with voltage.

Note

On vehicles without a 12 V button, the 12 V voltage converter has a permanent supply.

Using the 230 V socket

Danger

Danger of death if the connecting cable or socket is damaged

If the connecting cable or the 230 V socket is pulled out of the panelling, damaged or wet, you may receive an electric shock.

- ► Use only connecting cables that are dry and free of damage.
- ► Make sure that the 230 V socket is dry.
- ► If a 230 V socket is pulled out of the panelling or damaged, have it checked or replaced at a qualified specialist workshop immediately.
- ► Never insert the connecting cable into a 230 V socket that is pulled out of the panelling or damaged.

Danger

Risk of fatal injury due to improper handling of the power socket

In particular, you may receive an electric shock:

- If you reach into the power socket.
- If you plug unsuitable devices or objects into the power socket.

- ► Do not reach into the power socket.
- ► Only connect suitable devices to the power socket.

Danger

Risk of injury or death from components that supply power to the 230 V socket

Electrical components for supplying voltage to the 230 V socket are located in the stowage compartment behind the driver's seat.

If you modify or touch these components, particularly the orange cables, you may receive an electric shock.

The voltage converter in the stowage compartment may become hot when using the socket. You may burn yourself or objects stored in the stowage compartment may be damaged.

- ► Do not modify or touch electrical components in the stowage compartment.
- ► Ensure that objects stored in the stowage compartment do not come into contact with electrical components.

Danger

Danger of death due to electric shock

If you clean the 230 V socket with a damp cloth, there is a risk of electric shock.

There is a risk of fatal injury!

► Avoid the area around the 230 V socket when cleaning.

Do not connect multiway sockets to the 230 V socket.

Only use the 230 V socket at ambient temperatures between -40 °C and +50 °C.

Further requirements for operating the 230 V socket:

- Only connect devices that have a suitable plug that complies with the respective country-specific standards.
- For a duration of use under 30 minutes: Only devices up to a maximum of 1000 W may be connected.
- For a duration of use over 30 minutes: Only devices up to a maximum of 600 W may be connected.
- The on-board electrical system voltage must be within the permissible voltage range.
- The plug of the electronic device must be fully plugged into the 230 V socket.
- The insulation of the device to be plugged in is undamaged.

Note

Many devices consume quiescent current even when not in use. Therefore, unplug the device when you are no longer using it.

If you are not using the 230 V socket, keep the socket flap closed.

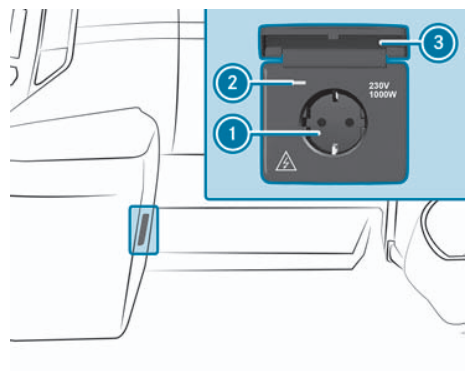

Using the 230 V socket

► Open the socket flap 3.

► Insert the plug of the device into the 230 V socket 1.

◁ The indicator lamp 2 lights up green.

Other indicator lamp display states 2:

Indicator lamp 2 is off while a device is connected.

- The LED is defective.

► Unplug the device from the socket.

► Stop using the socket.

► Have the socket checked at a qualified specialist workshop.

Indicator lamp 2 flashes green

- The maximal load of 1000 W has been exceeded.

► Check whether the consumer connected to the socket is within the permissible power range.

Indicator lamp 2 lights up red

- The on-board electrical system voltage is too low.

or

- The socket has overheated.

► Charge the vehicle battery.

If the fault persists even with the battery sufficiently charged:

► Unplug the device from the socket.
► Wait 20–30 minutes.
► Plug the device into the socket.

If the malfunction persists:

► Have the socket checked at a qualified specialist workshop.

Indicator lamp ② flashes red slowly

- The socket is faulty.

► Stop using the socket.
► Have the socket checked at a qualified specialist workshop.

Indicator lamp ② flashes red rapidly

- The surge protection device is active.

► Have the socket checked at a qualified specialist workshop.

Practical tips

Using the cigarette lighter

Danger

Risk of fire and injury from the hot cigarette lighter

You can burn yourself if you touch the hot heating element or the socket of the cigarette lighter.

Additionally, flammable materials can ignite if the hot cigarette lighter falls or if, for example, children hold the hot cigarette lighter against objects.

► Always hold the cigarette lighter by the knob.
► Always make sure that the cigarette lighter is out of reach of children.
► Do not leave children unattended in the vehicle.

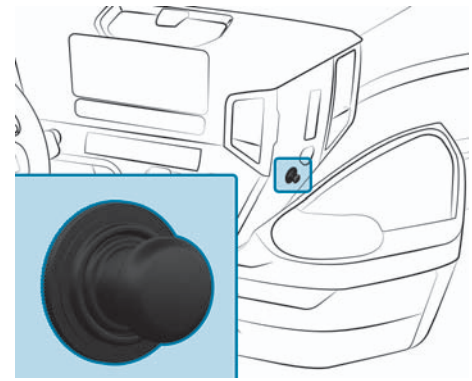

► Switch on the vehicle.
► Push in the cigarette lighter.
  ◁ The cigarette lighter will pop out automatically when the heating element is red-hot.
► Use the handle to pull the cigarette lighter out of the socket.

The cigarette lighter should be charged with a maximum of 5°A.

Activate/deactivate the smoke detector

Switch the alarm off/temporarily disable the smoke detector

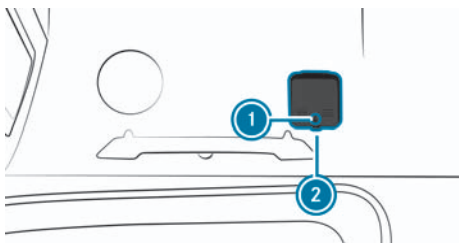

The smoke detector is located above the co-driver's door or on the ceiling behind the driver.

The smoke detector will alert you if smoke is emitted in the cab. The alarm can also be triggered by particles such as those found in cigarette smoke, dust, or exhaust fumes.

- ► Press the button (1).
  - ◁ The smoke detector will be disabled for approximately 20°minutes and will then automatically switch on again.
  - ◁ While the smoke detector is disabled, a brief tone will sound roughly every 40°seconds and button (1) will flash every ten seconds.

Checking that the smoke detector is working properly

Danger

Risk of fatal injuries if the smoke detector is out of order

If the battery is empty or the smoke detector is faulty, it may not warn you.

- ► Check the smoke detector's operational readiness on a regular basis.
- ► Replace an empty battery as soon as possible.

The smoke detector should be tested for functionality once a week.

- ► Press and hold button (1).
  - ◁ If the smoke detector is working properly, the alarm will sound. When the button is pressed, the smoke detector will be disabled for approximately 20°minutes.
  - ▽ If the battery is empty, a brief tone will sound roughly every 40°seconds.
    - ► Replace the battery as soon as possible to ensure the function of the smoke detector.

Replacing the battery

The smoke detector is powered by a 9°V block battery.

- ► Press release catch (2) and remove the smoke detector from the holder.
- ► Replace the battery.
- ► Fit the smoke detector back into the holder.

Stowage spaces and stowage compartments

Notes on stowage spaces and compartments

Danger

Risk of injury due to objects being stowed incorrectly

If objects in the vehicle interior are stowed incorrectly, they may slide or be thrown around and hit vehicle occupants. In addition, cup holders, open stowage spaces, and mobile phone receptacles will not always be able to retain all objects that they contain in the event of an accident.

There is a risk of injury, particularly in the event of braking manoeuvres or abrupt changes in direction!

- Always stow objects such that they cannot be thrown around in such situations.
- Always make sure that objects do not protrude from stowage spaces, luggage nets, or stowage nets.
- Close the lockable stowage spaces before starting a journey.
- Stow and secure objects that are heavy, hard, pointed, sharp-edged, fragile, or too large in the load compartment.

Danger

Risk of injury if the maximum permitted load is exceeded

Objects may be flung out of the stowage compartment. There is a risk of injury for vehicle occupants, particularly in the event of sudden braking or abrupt changes in direction!

- Always comply with the maximum permitted load of the stowage compartment.

Danger

Risk of injury if the maximum permitted load is exceeded

Objects may be flung onto the road surface.

- Always comply with the maximum permitted load of the stowage compartment.
- Always ensure that the stowage compartment is locked before every journey.

Maximum weights for storage compartments and drawers

Storage compartment/drawer	Maximum weight
Stowage compartment above the windscreen with cover	8 kg
Stowage compartments/cockpit drawers	10 kg
Stowage compartments/drawers in the centre under the berth	25 kg
Stowage compartments/drawers on the outside under the berth (including tool and accessories)	50 kg

Opening and closing stowage compartments

Drawers in the driver cockpit

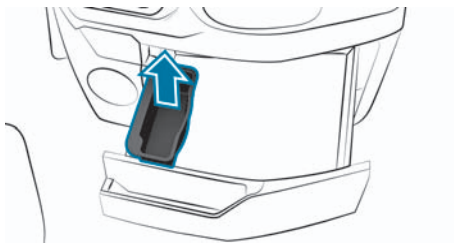

- Remove the insert and attach it to the left/right side of the drawer or another drawer.

Drawer under the bunk

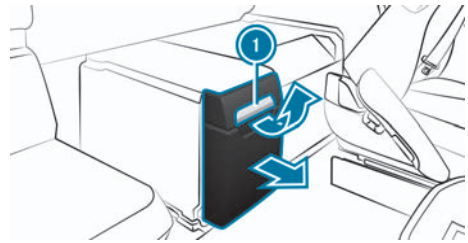

- **Open/close:** Pull handle 1 upwards and pull the drawer out or push it in as far as it will go.

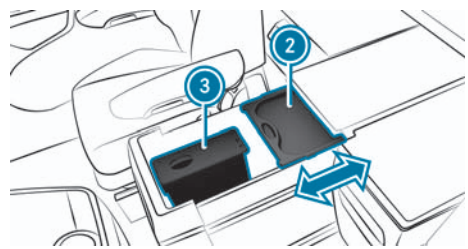

Storage tray and waste container

2 Stowage tray

3 Waste receptacle

- **Open/close:** Pull stowage tray 2 out into the desired position or push it in as far as it will go.

Waste receptacle

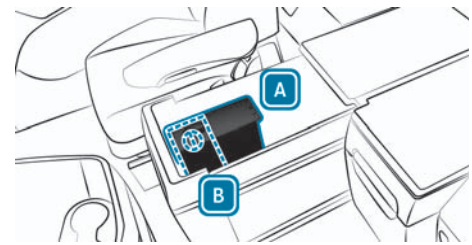

- Use waste receptacle 3 only in positions A or B. Otherwise, the waste receptacle will not be secured and may tip over during a journey.

Refrigerator box

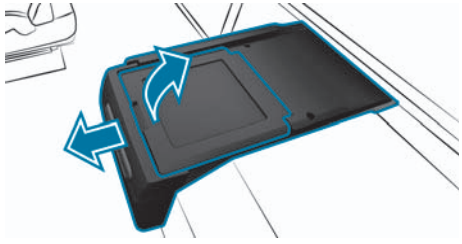

Depending on the equipment, one or two coolboxes may be installed instead of drawers.

- **To open:** Pull out the drawer in the direction of the arrow as far as it will go.
- Use the handle to swing the lid up in the direction of the arrow until it engages.
- **To close:** Use the handle to swing the lid down.
- Push the drawer in as far as it will go.

There is a control knob in the refrigerator box that you can use to switch it on and off.

Note

To reduce the vehicle's power consumption, switch the coolbox off manually when it is not in use.

Stowage compartments with outside flaps

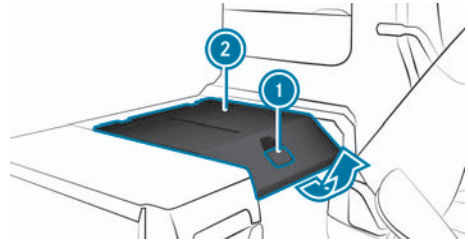

You can access the stowage compartments from inside via the stowage compartment flaps under the bunk and from outside via the outside flaps.

- Fold up the bottom bunk and secure it.
- **To open a stowage compartment flap:** Pull handle (1), swing stowage compartment flap (2) upwards until the lock engages.
  - ◁ The stowage compartment lighting will automatically switch on.
- **To close the stowage compartment flap:** Swing stowage compartment flap (2) downwards until it engages in the lock.
  - ◁ The stowage compartment lighting will automatically switch off.

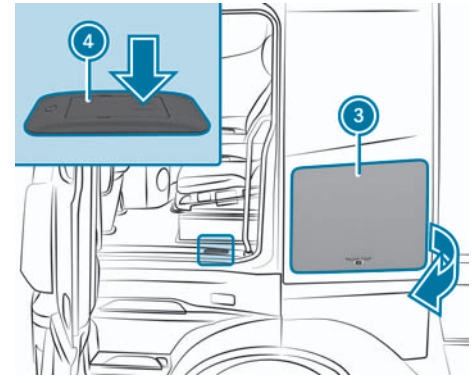

Outside stowage compartment flap

(3) Outside stowage compartment flap

(4) Release lever for outside stowage compartment flap

- **Opening the outside flap:** Push release lever ④ out.
  - ◁ The outside flap of stowage compartment ③ will open as far as the safety hook will allow.
- Push release lever ④ again.
  - ◁ The outside flap of stowage compartment ③ will be completely unlocked. The stowage compartment lighting will automatically switch on.
- Swing the outside flap of stowage compartment ③ forwards.
- **Closing the outer flap:** Close the outside flap of stowage compartment ③ until you hear the lock engage.
  - ◁ The stowage compartment lighting will automatically switch off.

Notes on the cosmetic mirror

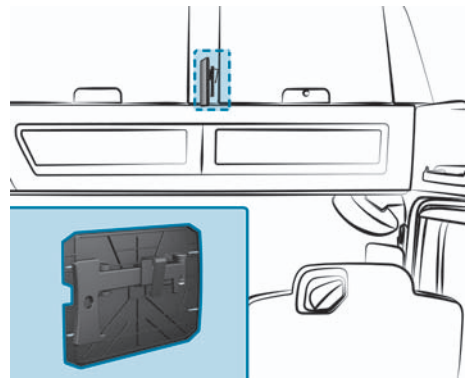

The cosmetic mirror is attached to the left partition wall of the right stowage compartment with snap-in hooks. You can remove the cosmetic mirror and set it up using the fold-out stand or hang it up in a suitable place using the hook.

Folding the folding table in/out

Danger

Risk of injury from the open folding table

Vehicle occupants could bump into the folding table and injure themselves.

- Close the folding table before each journey.

Danger

Risk of injury if the maximum load for the folding table is exceeded

The table panel may fold down suddenly.

- Never exceed the maximum permitted load for the folding table.

- Load the folding table up to a maximum of 15 kg.

Folding out the folding table

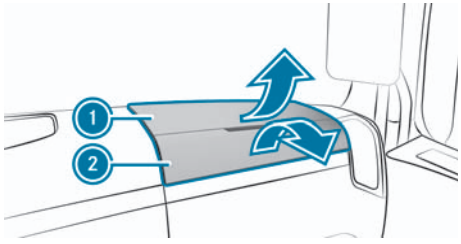

- Swing cover ② down.
- Swing cover ① up and hold it in place.

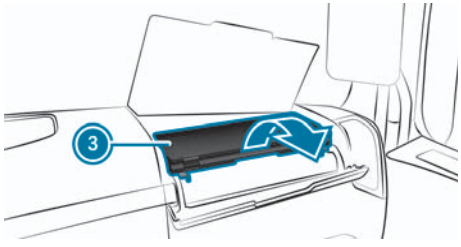

- Once the folding table ③ is folded together, swing it out as far as it will go.

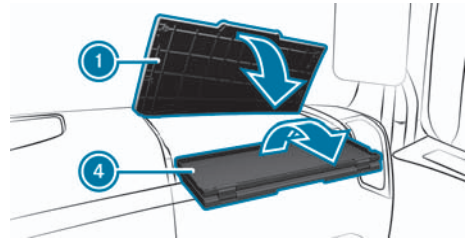

- Swing cover ① down.
- Fold out folding table half ④.

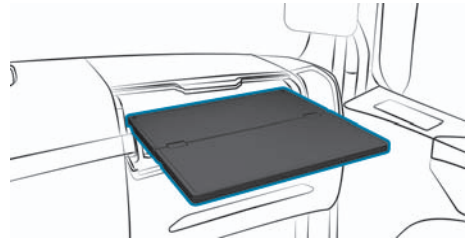

Notes on cup/bottle holders

Danger

Risk of accident or injury when using the cup holder while driving

The cup and bottle holders cannot be used to secure containers while the vehicle is in motion.

If you use cup or bottle holders while the vehicle is in motion, containers may be thrown around and liquid may be spilled. The vehicle occupants may come into contact with the liquid and if it is hot, they could be scalded. You could be distracted from traffic conditions, and you may lose control of the vehicle.

- Only use the cup and bottle holder when the vehicle is stationary.
- Only put suitable containers into the cup or bottle holders.
- Close the container, particularly if the liquid is hot.

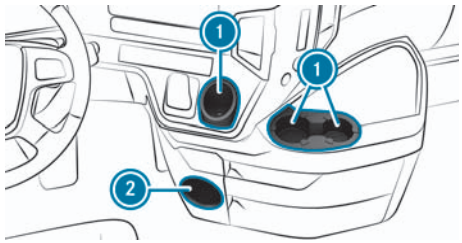

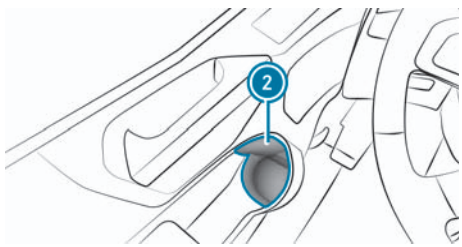

Cup holder/bottle holder

1. Cup holder
2. Bottle holder

Couple/uncouple the compressed-air connection in the cab

Danger

Risk of injury due to swirling particles if compressed air is used for cleaning

The dispersed particles could get into your eyes, nose, mouth, or ears and cause irritation.

- Always wear a respiratory protective mask, safety glasses, and hearing protection when cleaning the cab with compressed air.

Danger

Risk of injury from use of the compressed-air gun

If you point the compressed-air gun at parts of your body or those of other people, you could cause injury to eyes, ears, or the skin, for example.

- Always direct the compressed-air gun away from your body.
- Never point the compressed-air gun at other people.

Note

Damage to the air filter due to compressed air

To avoid damage:

- Do not clean the air filter with a compressed-air gun.
- Replace dirty air filters.

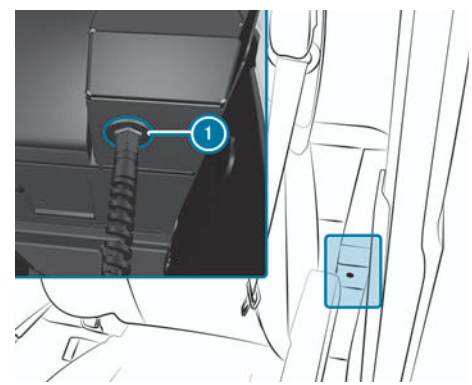

- **Coupling up:** Push the compressed-air hose into compressed-air connection (1) and engage.

- **Uncoupling:** Push the compressed-air hose into compressed-air connection (1) and remove.

Communication

Notes on the audio device (radio)

If you have Mercedes-Benz Trucks audio equipment, you can operate your audio equipment as follows:

- With the buttons on the multifunction steering wheel in the instrument cluster in the Audio menu (→ Page 169)
- With the audio equipment button in the bunch/daybed switch panel (→ Page 145)

Operate audio devices (radio) with the bed/bunk switch panel

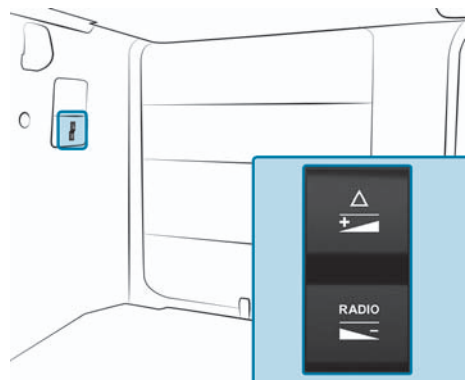

Bed/berth radio switching field

[△+]	To switch the audio devices on, to increase the volume, to select the next radio station, to select the next track
[RADIO −]	To switch the audio devices on/off, to decrease the volume

- **Activation:** Briefly press the button [△+] or [RADIO −].
- **Deactivation:** Press and hold the lower section of the button [RADIO −].
- **Increase the volume:** Briefly press the upper section of the button [△+].
- **Decrease the volume:** Briefly press the lower section of the button [RADIO −].
- **Select the next station/track:** Press and hold the upper section of the button [△+].

Telephone

Notes on the telephone

Danger

Risk of distraction by information systems and communications equipment

If you operate information systems and communications equipment integrated in the vehicle when driving, you may be distracted from what is happening in traffic.

You may also lose control of the vehicle.

- Only operate this equipment when the traffic situation permits.
- If this cannot be ensured, stop the vehicle as soon as possible, paying

attention to road and traffic conditions. Pay attention to the traffic conditions.

► Make the entries when the vehicle is stationary.

► When operating the phone or any other communication device, adhere to the legal regulations of the country you are currently in.

The vehicle may be equipped with an integrated Bluetooth® hands-free system. To charge the Bluetooth® mobile phone in the vehicle, you will need a suitable mobile phone charger bracket. These are available from retailers of Mercedes-Benz Trucks accessories.

► You can operate the mobile phone using the [ ] and [ ] buttons on the multifunction steering wheel.

The Daimler Truck AG installation specifications must be observed if you subsequently install one of the following communication devices:

- Mobile phone
- Two-way radio
- Fax machine

Notes on wireless charging of mobile phones

Danger

Risk of fire from placing objects in the mobile phone tray

If you place other objects in the mobile phone tray, there may in particular be a risk of fire.

► Apart from a mobile phone, do not place any other objects in the mobile phone tray, especially metal objects.

Note

Damage to objects caused by placing them in the mobile phone tray

If objects are placed in the mobile phone tray, they can be damaged by electromagnetic fields.

► Do not place credit cards, storage media, or other objects sensitive to electromagnetic fields in the mobile phone tray.

Note

Damage to the mobile phone tray caused by liquids

Liquids may damage the mobile phone tray.

► Make sure that no liquids get into the mobile phone tray.

Note

The mat can be removed to clean, e.g. with clean, lukewarm water.

System limits

Follow the following instructions when using the mobile phone tray:

- The charging function is only available when the vehicle is switched on.
- Small mobile phones may not be able to be charged in every position of the mobile phone tray.
- The mobile phone tray is equipped with a cooling system since the mobile phone can heat up during the

charging process. The degree of heating up depends on the applications currently running (e.g. apps).

- For more efficient charging, remove the protective case from the mobile phone. This does not include protective cases designed for wireless charging.
- Low and high outside temperatures can lead to functional limitations of wireless charging. Do not expose your mobile phone to direct sunlight and observe the operating instructions for the mobile phone.

Note

Charging is only possible at temperatures from -20°C to +50°C. Further restrictions depend on the mobile phone used.

Note

Only one mobile phone can be charged at a time, with a maximum power of up to 15 W.

Note

The charging cradle can hold mobile phones up to a size of 17 x 9 cm.

Wireless mobile phone charging

Requirements

- The mobile phone meets the Qi standard for wireless charging.

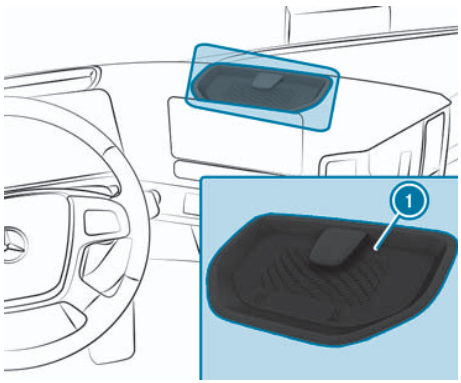

- ▶ Place the mobile phone as closely as possible to the centre of the mat (1) with the display facing upwards.
  - ◁ The mobile phone will be charged.
- ▶ Remove the mobile phone from the charging cradle to stop charging.

Using the notebook holder

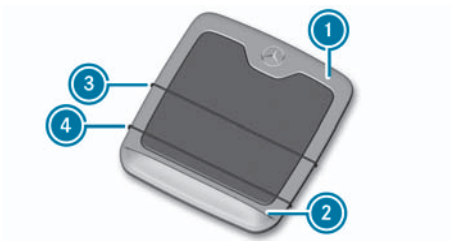

Upper side

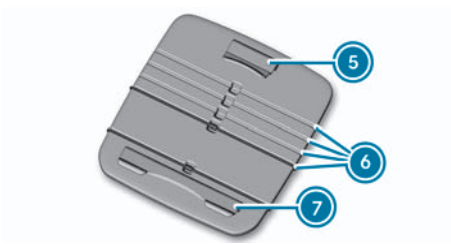

Lower side

- Only use the notebook holder ① when the vehicle is stationary.

Secure the notebook

- Place the notebook holder ① on the steering wheel and attach it to the upper guide ⑤ on the steering wheel.
- Open the notebook and slide the bottom part of the keyboard under the elastic bands ③ and ④ as far as the edge ② the notebook holder ①.
  - ◁ The upper elastic band ③ must be guided in one of the recesses ⑥.

The notebook holder can be attached to the following positions in the cab:

- Hook the notebook holder with the upper guide ⑤ into an open stowage space above the windscreen.

or

- Hook the laptop holder with the upper guide ⑤ into a handle above the doors.

or

- Hook the notebook holder with the upper ⑤ and lower guides ⑦ into the side wall stowage compartments of the lower bed or the lower bunk.

Notes on climate control

Note

Damage to the air-conditioning system due to rare use

If the air-conditioning system is not used for an extended period of time, the refrigerant compressor may be damaged.

- Switch on the air-conditioning system for at least approx. ten minutes once a month.

Note

Using the air-conditioning system increases the fuel consumption

Your fuel consumption will increase if the air-conditioning system or the automatic climate control is switched on.

- Only switch this function on if required.

The heating and air-conditioning system are operational only if the vehicle has been started.

The air-conditioning system regulates the temperature and air humidity in the cab.

The installed filter filters most of the dust particles, pollen and unpleasant odours out of the incoming outside air or the recirculated air in air-recirculation mode. A clogged filter reduces the airflow into the cab. Depending on the operating conditions and environmental influences, the interval for replacing the filter may be shorter than prescribed.

Note

Air the vehicle briefly in warm weather. This will accelerate cooling and the required temperature will be reached more quickly.

Overview of the multimedia system climate control functions

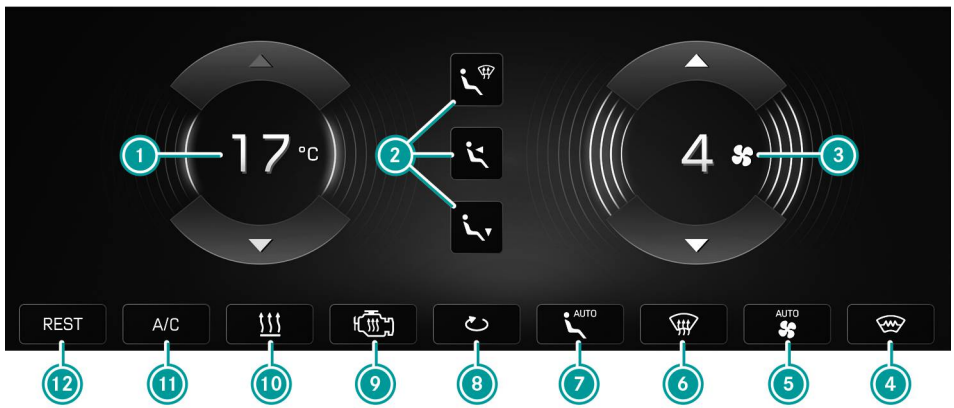

Example illustration

Climate control functions

1. Setting the temperature (→ Page 152)
2. Setting the air distribution (→ Page 152)
3. Setting the airflow (→ Page 152)
4. Switching the windscreen heater on/off (→ Page 130)
5. AUTO Automatic airflow control (→ Page 152)
6. Defrosting the windscreen (→ Page 152)
7. Automatic air distribution (→ Page 152)
8. Switch air-recirculation mode on/off (→ Page 152)
9. Switch engine preheating on/off (available only when stationary) (→ Page 155)
10. Activate/deactivate additional heating (→ Page 153)
11. A/C Switch air-conditioning system on/off (→ Page 151)
12. REST Switch residual heat utilisation on/off (only available when stationary) (→ Page 153)

12. Setting the air distribution (→ Page 152)

Switch the electric stationary air-conditioning system on/off (available only when stationary) (→ Page 156)

REST Switch residual heat utilisation on/off (only available when stationary) (→ Page 153)

Switch engine preheating on/off (available only when stationary) (→ Page 155)

Press the button below the multimedia display to access the climate control menu shown above.

Note

The functions shown on the display after the climate menu opens depend on whether the vehicle is stationary or moving.

Note

Depending on the vehicle's equipment, functions/buttons may be omitted.

As soon as a button lights up continuously, the function is activated.

Cooling with air dehumidification

Notes on cooling with air dehumidification

The air-conditioning system is only operational if the vehicle has been started.

In vehicles with an air-conditioning system, you can dehumidify and cool the interior air to a set temperature in warm weather.

You can switch between the A/C (cooling without air dehumidification) and A/C Dry (cooling with air dehumidification) functions by pressing and holding the A/C button.

Note

The display on the button will change depending on the function selected.

Cooling without air dehumidification consumes less fuel than cooling with air dehumidification. Only switch on cooling with air dehumidification if the windows/windscreen mist up.

Note

Condensation may drip from the underside of the vehicle when cooling mode is active.

Switching cooling with air dehumidification (air-conditioning system) on/off

Switching on cooling without air dehumidification

- In the multimedia system, from menu Climate control, press button A/C.

Switching cooling with air dehumidification on

- In the multimedia system, in the Climate control menu press and hold the A/C button.
  - ◁ The display for button A/C will switch from A/C to A/C Dry.
- Briefly press the Dry button A/C.

Deactivation

- Briefly press the Dry button [A/C] or [A/C] again.

Setting the temperature

It is possible to set the temperature in the menu Climate control or by using the buttons under the multimedia system.

Setting via the multimedia system

- In the Climate control menu, increase or reduce the set value using the [∧] or [∨] buttons (→ Page 150).

Setting via buttons

- Press button [TEMP +] or [TEMP −] to increase or reduce the setting.

Setting the air distribution/airflow

Air distribution

The symbols for air distribution have the following meanings:

	Directs additional air towards the windscreen
	Directs additional air towards the windscreen and throughout the cab
	Directs additional air into the footwell
	Directs air via the centre and side vents only

- In the multimedia system, in the Climate control menu set the desired air distribution by pressing the corresponding buttons.

or

- Press button [AUTO] (→ Page 150) .

Airflow

- In the multimedia system, in the Climate control menu increase/reduce the airflow [⊛] with the [∧]/[∨] buttons.

or

- Press button [⊛] [AUTO] (→ Page 150).

Demisting/defrosting the windscreen and windows

Select the following setting only for as long as it takes for the windscreen to be clear again.

- **Vehicles with windshield heater:** Switch on the windscreen heater (→ Page 130).
- In the multimedia system, from menu Climate control, press button [⊛].
- Open the side air vents completely and turn them outwards to the side windows (→ Page 158).

Switching air-recirculation mode on/off

Note

When air-recirculation mode is switched on, the windows may mist up more quickly, especially in low outside temperatures. Only briefly switch air-recirculation mode on, e.g. when dust or unpleasant odours are causing annoyance.

- Close the windows, roof hatch and pop-up roof or sliding sunroof.
- In the multimedia system, from menu Climate control, press button [↻].

Switch residual heat utilisation on/off

In vehicles with residual heat utilisation, the residual heat from the engine can be used to continue heating the parked vehicle for up to approximately 90 minutes.

Note

If residual heat utilisation is switched on, the auxiliary heating (→ Page 153) and the stationary air conditioning system (→ Page 156) will automatically be switched off.

- In the multimedia system, press the [REST] button in the Climate control menu (→ Page 150).
- Set the temperature, airflow, air distribution and air vents according to your needs.

Residual heat utilisation will switch off automatically in the following situations:

- The vehicle is started.
- After a maximum operating time of 90 minutes (depending on the temperature set and the coolant temperature).

Auxiliary heating

Notes on auxiliary heating

Danger

Risk of fatal injury due to poisonous exhaust gases

If the tailpipe is blocked or sufficient ventilation is not possible, poisonous exhaust gases such as carbon monoxide may enter the vehicle. This is the case in enclosed spaces or if the vehicle gets stuck in snow, for example.

- Always switch the stationary heater off in enclosed spaces without an air extraction system, e.g. in garages.
- Keep the tailpipe and the area around the vehicle free from snow when the engine or the stationary heater is running.
- Open a window on the side of the vehicle facing away from the wind to ensure an adequate supply of fresh air.

Danger

Risk of burns on the exhaust pipe when working on the auxiliary heating

If the auxiliary heating was switched on, you may suffer burns from the hot exhaust pipe.

- Let the exhaust pipe cool down before working on the auxiliary heating.

Note

Damage to the auxiliary heating

If the auxiliary heating is not used for an extended period of time, it may be damaged.

- Switch on the auxiliary heating for at least approx. ten minutes once a month.

If you do not use the auxiliary heating for an extended period, deposits may form in the fuel system of the auxiliary heating due to exposure to heat and condensation. These deposits can cause malfunctions in the auxiliary heating.

- Have the auxiliary heating checked and repaired at a qualified specialist workshop before you use it again.
- When using the auxiliary heating system, ensure that you have sufficient fuel. If the indicator lamp [⛽] lights up, do not use the auxiliary heating.
- Only operate the auxiliary heater with commercially available diesel fuel (→ Page 531).

The auxiliary heating operates independently of the engine and supplements the vehicle's heating. To support the heating (booster heater function), you can also switch on the auxiliary heating when the vehicle is running and in low outside temperatures.

Depending on the vehicle's equipment, the following options are available for controlling the auxiliary heating:

- The Climate control menu in the multimedia system (→ Page 150)
- The bed/bunk switch panel

If your vehicle is equipped with engine preheating, the auxiliary heating can also heat the coolant. Engine preheating therefore also protects the engine and saves fuel. You can switch the auxiliary heating on or off manually or define up to two switch-on times.

If you switch on the auxiliary heating system manually or using switch-on times, residual heat utilisation will be switched off automatically (→ Page 153).

Forced switch-off

Note

Damage to the auxiliary heating due to a power supply interruption

If the power supply is interrupted in heating mode, the cooling-off period cannot be activated and the auxiliary heating could be damaged as a result.

- Interrupt the power supply using the battery disconnect switch only in cases of danger in heating mode and in the auxiliary heating cooling off period.

In vehicles used to transport hazardous goods, you must switch off the heater before entering hazardous zones (e.g. refineries).

For safety reasons, you cannot set any switch-on times for these vehicles and can switch on engine preheating only with the immediate heating mode.

If you switch off the vehicle or switch on a power take-off, the heater will switch off automatically. The combustion-air

blower will continue to run for a short time after engine shutdown and then shut off automatically.

Switch immediate heating mode on/off

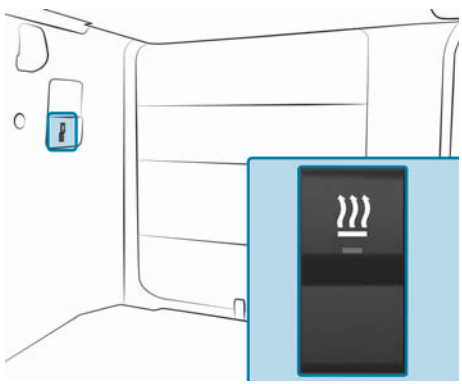

Additional button on the bed/bunk switch panel

- **Activating/deactivating:** In the multimedia system, press the button in the Climate control menu (→ Page 150).

or

- On the bed/bunk switch panel, press button .

- Set the temperature, airflow, air distribution and air vents according to your needs.
  - ◁ The automatic climate control will switch to automatic mode automatically.

Note

The blower can start up with a delay depending on the coolant temperature.

The auxiliary heating will switch off automatically after around eleven hours. The auxiliary heating will continue to run for around two minutes after it switches off.

Switch engine preheating on/off

In vehicles for transporting hazardous goods, you can switch engine preheating on manually.

- **Activate/deactivate:** In the multimedia system, from menu Climate control, press button .

Engine preheating will switch off automatically with the auxiliary heating.

Note

When the engine preheating function is switched on, the cab will automatically be heated as well.

Setting the switch-on time

Danger

Risk of fatal injury when parking the vehicle in unsuitable locations with a preselected switch-on time for the auxiliary heating

If you do not ensure that there is sufficient ventilation, poisonous exhaust gases may accumulate.

If there are highly flammable substances or combustible materials in close proximity, there is a risk of fire and explosion.

- If the vehicle is parked under these or similar conditions, always deactivate the preselected switch-on times.

Switch-on times can be set for auxiliary heating (warming the cab) and engine

preheating (warming the coolant). If the vehicle is equipped to transport hazardous goods, no switch-on times can be set.

- In the multimedia system ▶▶ Timer control, select the New clim. ctrl setting menu item.
- Set the desired value in menu items Time, Repeat and Temperature.
- In menu item, select Function for the stationary heater or and for the stationary heater with engine preheating.
- Press the button .
  - ◁ A new air conditioning control will now have been created.
  - ◁ You can see the selected settings on the button of the relevant climate control in the New clim. ctrl setting menu.
- **Activate/deactivate:** Press the button for the climate control you require.
  - ◁ When the climate control is switched on, the red indicator lamp in the button will light up together with the yellow indicator lamp in the button below the multimedia display.
  - ◁ The selected climate control function will switch on automatically at the switch-on times set. When the function is active, the red indicator lamp in the button below the multimedia display will light up.

Electric stationary air-conditioning system

Information about the stationary air conditioning system

The stationary air conditioning system cools the interior air according to the set temperature when the vehicle is switched off.

You can operate the stationary air conditioning system in the Climate control menu of the multimedia system (→ Page 150) or using the bed/bunk switch panel (→ Page 157). You can switch the stationary air conditioning system on or off manually (immediate cooling mode) or define switch-on times.

The operating time of the stationary air conditioning system depends on the following factors:

- Outside temperature and sunlight
- Set vehicle interior temperature
- State of charge and age of the batteries
- Operation of other electrical consumers
- Driving cycle

The stationary air conditioning system is supplied with voltage not from separate, auxiliary batteries, but rather exclusively from the vehicle batteries. To maintain the vehicle's ability to start, the power output of the stationary air conditioning system will automatically be reduced in increments or switched off. After it has switched off automatically, you can only switch the stationary air conditioning system back on after a journey of a duration that is sufficient to charge the batteries. If you cannot switch the auxiliary climate control on due to an insufficient battery

charge, a message stating this will appear on the multimedia system display.

Observe the instructions on care and maintenance of the batteries (→ Page 445).

The controller of the stationary air conditioning system will feed fresh air into the cooled interior air as needed. This means that you do not have to open the windows during overnight stops or longer stops. After it is switched on, the stationary air conditioning system's blower will operate in automatic mode, which you can switch off if necessary. If the temperature of the outside air is sufficient for cooling the interior air in automatic mode, the stationary air conditioning system will switch to fresh air mode. This will extend the operating time, as it will spare the batteries.

If you switch the stationary air conditioning system on manually or via the switch-on time, the auxiliary heating and the residual heat utilisation will automatically be switched off.

Switching immediate cooling mode on/off

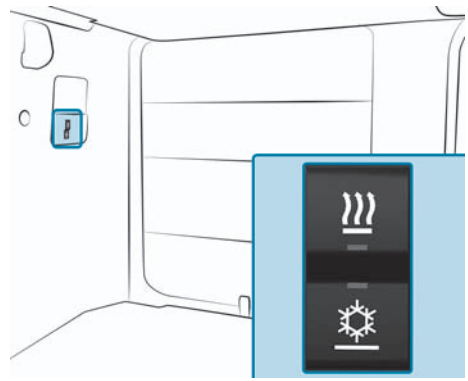

Additional button on the bed/bunk switch panel (example: vehicle with auxiliary heating)

- **Activate/deactivate:** In the multimedia system, press the button in the Climate control menu (→ Page 150).

or

- On the bed/bunk switch panel, press button .
- If necessary, set the airflow manually in the climate control menu.

Note

Only the first six blower settings can be selected.

Note

Once the vehicle is started, the stationary air conditioning system will switch off automatically.

Setting the switch-on time

- In the multimedia system → Timer control, select the New clim. ctrl setting menu item.
- Set the desired value in menu items Time, Repeat and Temperature.
- In menu itemFunction, select for the stationary air conditioning system .
- Press the button .
  - ◁ A new air conditioning control will now have been created.
  - ◁ You can see the selected settings on the button of the relevant

climate control in the New clim. ctrl setting menu.

- **Activate/deactivate:** Press the button for the climate control you require.
  - When the climate control is switched on, the red indicator lamp in the button will light up together with the yellow indicator lamp in the button below the multimedia display.
  - The stationary air conditioning system will switch on automatically at the configured switch-on times. When the function is active, the red indicator lamp on the button below the multimedia display will light up.

The stationary air conditioning system will switch off automatically after around two hours or when the vehicle is started.

Air vents

Notes on air vents

Danger

Risk of cold or hot burns due to being too close to the air vents

Very hot or very cold air can flow from the air vents.

- Make sure that all vehicle occupants always maintain a sufficient distance from the air vents.
- If necessary, direct the airflow to another area of the vehicle interior.

Always keep all air vents and ventilation grilles in the cab free so that the air can flow into the cab unhindered.

Adjusting the air vents

Centre air vents

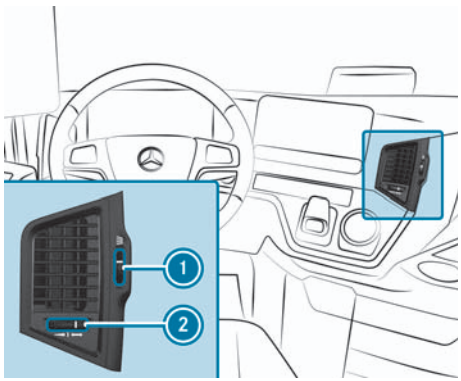

Centre air vent in driver cockpit (example)

- **To open:** Turn adjustment wheel° 2 to position°**I**, or to the right as far as it will go.
- **To set the airflow direction:** Turn adjustment wheel° 2 to the right beyond the position°**I** and adjust the airflow according to the direction of rotation.

or

- Move adjustment wheel° ① up or down according to the airflow direction.
- **To close:** Turn adjustment wheel° ② to the left as far as it will go.

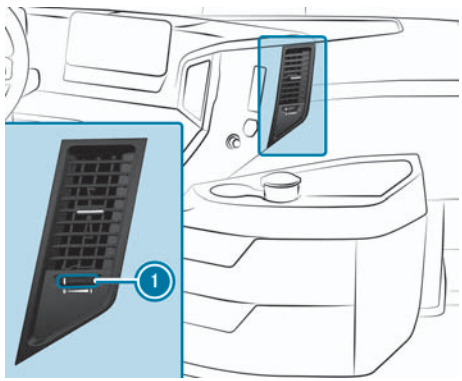

Centre air vent in co-driver's area (example)

- **To open or to close:** Turn adjustment wheel° ① to position° **I** to open, and to position° **0** to close.

Side air vents

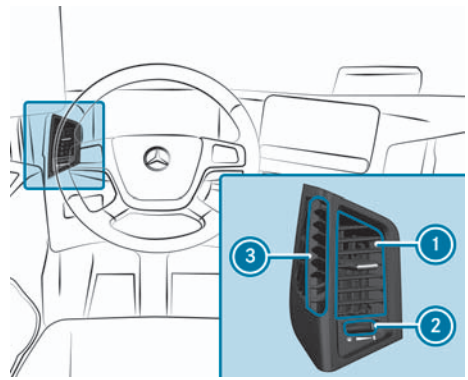

Side air vent in driver cockpit (example)

- **To open or to close:** Turn adjustment wheel° ② to the left to open, and to position° ① 0 **to close the side air vent°**.
  - ◁ Turning the adjustment wheel° ② to the left beyond the detent position into position° [ ] opens the demister vent° ③.

Instrument cluster

Notes on the instrument cluster

Danger

Risk of distraction by information systems and communications equipment

If you operate information systems and communications equipment integrated in the vehicle when driving, you may be distracted from what is happening in traffic.

You may also lose control of the vehicle.

- Only operate this equipment when the traffic situation permits.
- If this cannot be ensured, stop the vehicle as soon as possible, paying attention to road and traffic conditions. Pay attention to the traffic conditions.
- Make the entries when the vehicle is stationary.

Danger

Risk of accident if the instrument cluster fails

If the instrument cluster fails or malfunctions, you will not see any limitations to the functioning of safety-relevant systems. This may impair operating safety.

- Park the vehicle safely as soon as possible and inform a qualified specialist workshop.

When operating the instrument cluster, adhere to the legal regulations of the country you are currently in.

You can change the display style of the instrument cluster in the multimedia system (→ Page 182).

Notes on the rev counter

Note

Engine damage due to the maximum engine speed being exceeded

If the maximum permissible engine speed is exceeded, a warning tone will sound.

- Avoid driving in the red speed range (danger zone).

Exemplary representation

Rev counter

1. Economical operating range (green)
2. Engine brake operating range (yellow)
3. Danger zone, danger of overrevving (red)

If the indicator lamp on the instrument cluster lights up, the engine speed is high, e.g. when you shift down to a lower gear.

- ► See further information in the event window of the on-board computer.
- ► Reduce the driving speed with the service brake or shift up one gear.
  - ◁ The indicator lamp in the instrument cluster goes out.

General driving instructions for the rev counter:

- When driving, the rev counter should be observed and the economical range 1 maintained.
  In some situations, it may make sense to operate the engine outside the economical operating range, e.g. on uphill gradients or when overtaking.
- Driving the vehicle within an economical operating range 1 can achieve low fuel consumption and reduce wear.
- The engine speed range 2 should be used in engine braking mode. The maximum engine braking effect is produced just before red danger zone 3.
- When driving downhill, make sure that the engine speed does not enter the red danger zone 3.
- Idle speed will be set automatically depending on the coolant temperature.
- When the vehicle is stationary, the engine is running and the transmission is in neutral, the engine will accelerate only slowly.

Note

Refer to the information about maintaining an economical driving style in the ECO support menu of the instrument cluster (→ Page 169). The on-board computer can help you to optimise the way you drive and to develop fuel-saving driving habits.

Notes on the AdBlue® display

AdBlue® gauge (example)

The AdBlue® gauge is only available in vehicles with BlueTec® exhaust gas after-treatment.

The AdBlue® reducing agent is required for reducing engine emission values.

The MOT approval will be invalidated if the vehicle is operated without AdBlue®. The legal consequence of this is that the vehicle may no longer be operated on public roads.

Note

The menu Range/consumption of the instrument cluster (→ Page 169) can be used to display the range of your vehicle based on the current fuel tank contents.

If the AdBlue® level has dropped to approximately 10% of the tank capacity, a display message with the symbol will appear on the instrument cluster.

- Top up the AdBlue® tank immediately (→ Page 367).

BlueTec® 4 vehicles and BlueTec® 5 vehicles: if you drive until the AdBlue® tank is empty, engine output may be reduced.

BlueTec® 6 vehicles: If the AdBlue® level drops to approx. 2.5 %, engine output may be reduced.

If the AdBlue® tank has run dry, the event will be stored and signalled as an emissions-related malfunction by the indicator lamp when the engine is started (→ Page 168). In addition, speed may be limited to approximately 20 km/h.

Notes on the fuel display

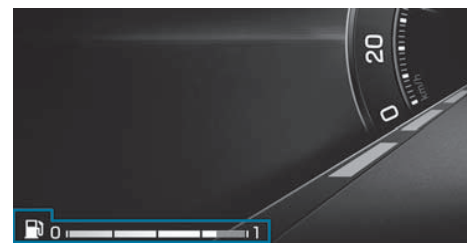

Instrument cluster (example)

The fuel gauge enters the reserve area if the fuel level has dropped to approximately 14% of the tank capacity. The instrument cluster shows a corresponding display message with the symbol .

Note

The menu Range/consumption of the instrument cluster (→ Page 169) can be used to display the range of your vehicle based on the current fuel tank contents.

Displays

Overview of time and outside temperature

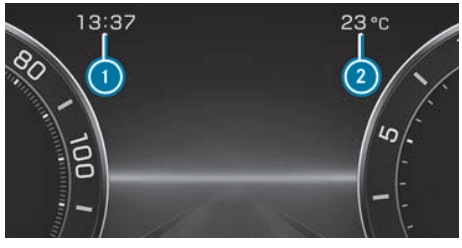

You must pay special attention to road conditions when temperatures are around freezing point.

Note that the outside temperature display shows the measured air temperature and not the road temperature.

There is a delay in displaying a change in outside temperature.

- ► Switch on the vehicle.
  - ◁ The display on the speedometer will show the time (1) and outside temperature (2).

Odometer overview

Instrument cluster menu Trip distance/total distance

The daily trip distance (1) and the total distance (2) are displayed in the Odometer reading menu on the instrument cluster (→ Page 169).

Engine diagnosis indicator lamp: Vehicles without BlueTec® exhaust gas aftertreatment

Warning/indicator lamp	Possible causes/consequences and ▶ solutions
Engine diagnostics warning lamp	If there are no malfunctions, the indicator lamp will light up briefly and then go out during the instrument cluster display check after the vehicle is started.

Engine diagnosis indicator lamp: BlueTec® 4 vehicles and BlueTec® 5 vehicles:

Warning/indicator lamp	Possible causes/consequences and ▶ solutions
Engine diagnostics warning lamp	If there are no malfunctions, the indicator lamp will light up briefly and then go out during the instrument cluster display check after the vehicle is started.
Engine diagnostics warning lamp	The indicator lamp is flashing. The instrument cluster will display a red display message. AdBlue® has been used up or an emissions-related malfunction has been detected. Engine output may be reduced. ▶ Follow the instructions in the display message. ▶ Carefully drive to the nearest filling station and top up with AdBlue® (→ Page 368). or ▶ Drive carefully to the nearest qualified workshop and have the malfunction rectified immediately.
Engine diagnostics warning lamp	Indicator lamp lights up. The BlueTec® exhaust gas aftertreatment system is malfunctioning or has an emissions-related fault. The malfunction or fault may damage the BlueTec® exhaust gas aftertreatment system. ▶ If the instrument cluster shows a display message, observe it. ▶ Have the BlueTec® exhaust gas aftertreatment system checked immediately at a qualified specialist workshop.

Engine diagnosis indicator lamp: BlueTec® 6 vehicles

Warning/indicator lamp	Possible causes/consequences and ▶ solutions
Engine diagnostics warning lamp	The indicator lamp is flashing. Once you have switched on the vehicle, the indicator lamp will indicate the system's status by means of a sequence of flashes. If there are no malfunctions, the indicator lamp will go out after the vehicle is started (→ Page 168).
Engine diagnostics warning lamp	The indicator lamp lights up and remains lit after the vehicle is started. The BlueTec® exhaust gas aftertreatment system is malfunctioning or has an emissions-related fault. The malfunction or fault may damage the BlueTec® exhaust gas aftertreatment system. ▶ If the instrument cluster shows a display message, observe it. ▶ Have the BlueTec® exhaust gas aftertreatment system checked immediately at a qualified specialist workshop.
Engine diagnostics warning lamp	Indicator lamp lights up. The instrument cluster shows a display message and the indicator lamp in the status area lights up. An emissions-related malfunction has been detected. ▶ Follow the instructions in the display message. ▶ Have the BlueTec® exhaust gas aftertreatment system checked immediately at a qualified specialist workshop. If you do not follow the instructions in the display message, the engine output may be reduced as per the message displayed: • After approximately 10 hours, e.g. if a low-grade diluted reducing agent is used or the metering is incorrect • After approximately 36 hours, e.g. if the exhaust gas recirculation or the security system is faulty In certain cases, engine output may be reduced even earlier.

Warning/indicator lamp	Possible causes/consequences and ▶ solutions
Engine diagnostics warning lamp	The indicator lamp comes on. Engine output is reduced. The instrument cluster shows a display message and the indicator lamp in the status area lights up at the same time. You have not rectified a detected emissions-related malfunction. ▶ Follow the instructions in the display message. ▶ Drive carefully to the nearest qualified workshop and have the malfunction rectified immediately. If you do not follow the instructions in the display message, the speed may be limited as per the message displayed: ● Approximately 20 hours after the first occurrence of a malfunction, e.g. if a low-grade diluted reducing agent is used or the metering is incorrect ● Approximately 100 hours after the first occurrence of a malfunction, e.g. if the exhaust gas recirculation or the safety system is faulty In certain cases, speed may be limited even earlier.
Engine diagnostics warning lamp	The indicator lamp comes on. The speed is limited to approximately 20 km/h. The instrument cluster also displays the indicator lamp in the status area. AdBlue® has been used up or a detected emissions-related malfunction has not been rectified. ▶ Follow the instructions in the display message. ▶ Carefully drive to the nearest filling station and top up with AdBlue® (→ Page 368) or ▶ Drive carefully to the nearest qualified workshop and have the malfunction rectified immediately. ▶ The MOT approval will be invalidated if you continue to use the vehicle.

System check after a malfunction

BlueTec® 4 vehicles and BlueTec® 5 vehicles:

Once the AdBlue® tank has been refilled or the fault rectified, full engine output will be restored. If the system check does not detect any other faults, the indicator lamp will go out. It may take several journeys to complete the system check.

BlueTec® 6 vehicles:

Once the AdBlue® tank has been refilled or the fault rectified, full engine output will be restored. If the system check does not detect any other faults, the indicator lamp will go out after the system status display. It may take several journeys to complete the system check.

If the reducing agent in the AdBlue® tank is low quality or diluted, you must empty the tank and then refill it with AdBlue® in accordance with DIN 70070/ISO. You can then initiate a system check.

- In addition, manually regenerate the diesel particulate filter (→ Page 357).

BlueTec® 6 exhaust gas aftertreatment status display

In BlueTec® 6 vehicles, the BlueTec® exhaust gas aftertreatment status is indicated for quick on-site inspection by authorities.

Signalling takes place using the indicator lamp in three successive phases. The signal lights up after you have switched on the vehicle and goes out when the vehicle starts.

The first phase is the instrument cluster display check. The indicator lamp will light up for approximately five seconds and then go out for approximately ten seconds.

The second phase indicates the system check status. The indicator lamp will either light up again for five seconds or flash for approximately five seconds. It will then go out for around five seconds.

In the third phase, the indicator lamp will indicate whether any emissions-relevant malfunctions have been detected.

If no malfunctions relevant to emissions are identified, the indicator lamp will light up briefly and then go out for approximately five seconds. This flashing sequence will be repeated until the vehicle is started.

If a malfunction relevant to emissions is identified, the indicator lamp will flash three times and then go out for approximately five seconds. This flashing sequence will be repeated until the vehicle is started. The indicator lamp will remain lit for approximately 15 seconds after the vehicle is started.

In the following cases, the indicator lamp will light up and remain lit after the vehicle is started:

- A serious emissions-related malfunction has been detected.
- An emissions-related malfunction was detected more than 200 hours ago and is still applicable.

On-board computer

Notes on/overview of the on-board computer

Danger

Risk of distraction by information systems and communications equipment

If you operate information systems and communications equipment integrated in the vehicle when driving, you may be distracted from what is happening in traffic.

You may also lose control of the vehicle.

- ► Only operate this equipment when the traffic situation permits.
- ► If this cannot be ensured, stop the vehicle as soon as possible, paying attention to road and traffic conditions. Pay attention to the traffic conditions.
- ► Make the entries when the vehicle is stationary.

When operating the on-board computer, observe the legal requirements for the country in which you are currently located.

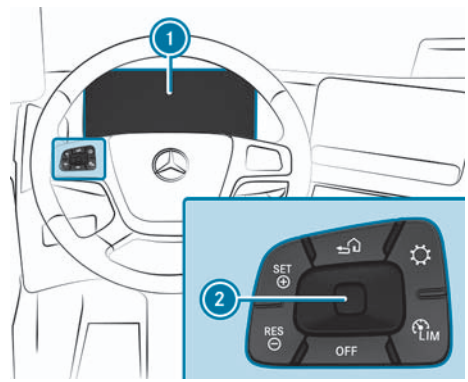

Example illustration

On-board computer

1. Instrument cluster
2. Navigate/confirm/select in the on-board computer
   Main menu and back button

The on-board computer is operated using the left-hand button group on the multifunction steering wheel.

The on-board computer will provide you with the following information when you are driving:

- Fuel consumption
- Trip time
- Operating statuses
- Maintenance due dates
- Malfunctions
- Causes of malfunctions
- Actions to be taken

Overview of menus on the on-board computer

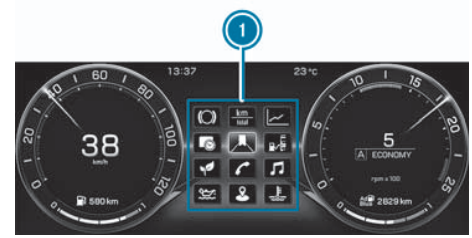

Example illustration

Multimedia Cockpit “Classic Design”

1. Menu display
   Supply pressure

Distance
Trip computer
Tachograph
Assistance
Range/consumption
Eco Support
Phone
Audio
Engine oil level
Navigation
Coolant temperature
Battery status

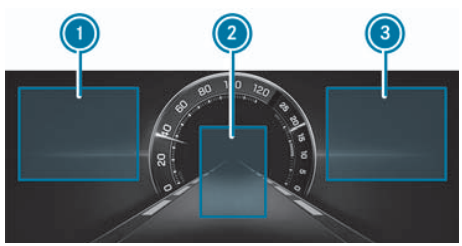

Example illustration

Advanced Design instrument cluster

1 Menus on left
Supply pressure
coolant temperature
Trip computer
Range/consumption
Engine oil level
Battery status

2 Menus on the tachograph
Distance
Assistance

3 Menus on right
Tachograph
Eco Support
Telephone
Audio
Navigation

You can use the button group on the left of the multifunction steering wheel to navigate through the menus and to open/close (→ Page 169) individual menus.

Note

The number and order of the menus depends on your vehicle's equipment and the type of vehicle.

Overview of warning/indicator lamps in the status area

Safety instructions

If you ignore warning/indicator lamps, you cannot recognise failures and malfunctions in components or systems. Driving/braking characteristics may be affected and the reliability and road safety of your vehicle may be impaired.

- Have the vehicle checked and repaired as soon as possible at a qualified specialist workshop.
- Always observe warning/indicator lamps and follow the appropriate remedial measures.

Overview

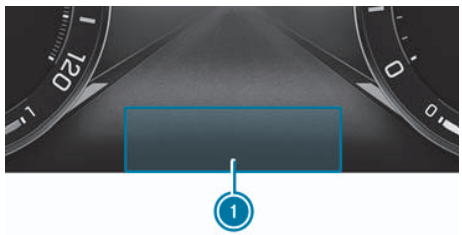

Status area on the instrument cluster (example: Classic Design)

Status area on the instrument cluster (example: Advanced Design)

If there is a fault, warning, or operating status information, a warning/indicator lamp will come on in the status area ① of the instrument cluster. The warning/indicator lamp comes on in a different colour depending on the priority of the malfunction, warning, or operating status information. The warning/indicator lamp may also light up in addition to a display message.

	Work lamps
	Preglow system
	Restraint system (→ Page 39)
	Seat belt warning (→ Page 44)
	Assistance systems faulty (→ Page 573)
	Lane Keeping Assist switched off (→ Page 309)
	Lane Departure Protection switched off (→ Page 328)
	Frontguard Assist malfunction (→ Page 291)
	The acoustic warning from Sideguard Assist and the additional automatic brake intervention from Active Sideguard Assist have been deactivated (→ Page 320) The steering intervention has been deactivated (only vehicles with Active Drive Assist 3) (→ Page 320)
	Sideguard Assist or Active Sideguard Assist are only available to a limited extent (e.g. only available on one side) (→ Page 291)
	Sideguard Assist or Active Sideguard Assist unavailable (→ Page 291)
	Engine oil pressure too low; see corresponding display message
	Oil level too low
	Coolant temperature too high (→ Page 580)
	Coolant level too low (→ Page 430)
	Emissions-related malfunction in the BlueTec® exhaust gas aftertreatment or low AdBlue® supply
	Energy-saving mode active
	Battery charge level too low
	Alternator faulty or undervoltage
	Service due date; see corresponding display message
	Turbo retarder clutch (→ Page 263)
	Leading axle (→ Page 341)
	Trailing axle (→ Page 341)
	Starting-off aid (→ Page 341)
	Steered additional axle centred (→ Page 342)
	Steering angle disparity in steered additional axle (→ Page 342)
	Hydraulic auxiliary drive

Overview of warning/indicator lamps in the status area

	Off-road gear transfer case
	Transmission oil temperature too high (→ Page 437)
	Monitored fifth-wheel coupling (→ Page 372)
	Monitored fifth-wheel coupling (→ Page 372)
	Monitored fifth-wheel coupling malfunction (→ Page 372)
	Fifth-wheel coupling; refill grease reservoir (see separate operating instructions)
	Cargo liftgate (see separate operating instructions)
	Tipper operation
	Power take-off (→ Page 403)
	Continuous brake malfunction (→ Page 245)
	Tyre pressure monitor warning message, see corresponding display message
	Tyre pressure monitoring system (→ Page 500)
	Frequent-stop brake (→ Page 242)
	Brake pad wear shown additionally with for a towing vehicle, or shown with for trailer/semitrailer

Notes on operating safety

For your own safety, be sure to observe the following points when operating mobile communications equipment and, in particular, your voice control system:

- Observe the legal requirements for the country you are currently in.
- If you use the voice control system in an emergency, your voice may change and this may delay your telephone, e.g. for an emergency call.
- Familiarise yourself with the functions of the voice control system before starting a journey.

Using the voice assistant

Conducting a dialogue

Requirements

- The Voice activation with “Hey Mercedes” is switched on in the multimedia system.
- The Voice interruption option is switched on in the multimedia system.

Note

The Voice interruption option enables a dialogue to be accelerated. Announcements do not have to be listened to until the end, but can be interrupted by speaking.

Starting a dialogue

► Say “Hey Mercedes”.
  ◁ The voice assistant is activated.
► or
► Press the start voice control button on the multifunction steering wheel.
  ◁ A wave appears in the multimedia system. The dialogue can be started.

Note

Whole sentences in your colloquial language can be used as voice commands for the dialogue with the voice assistant. Voice activation can also be combined directly with a voice command, e.g. “Hey Mercedes, turn on the lights”.

Overview of operable voice assistant functions

Depending on the vehicle equipment, you can use the voice assistant to operate the following functions:

- Telephone
- Navigation
- Radio and media
- Vehicle functions

Setting voice assistant functions in the multimedia system

Setting voice assistant functions in the multimedia system

Multimedia system:

Switching voice activation of the voice assistant on or off

- Select Voice activation with “Hey Mercedes”. If the function is active, the dialogue guidance can be activated with the “Hey Mercedes” voice command.

Switching voice interruption on or off

- Select Voice interruption. If the function is active, a command can be spoken during a system voice output.

Note

In multi-stage dialogues, only the next dialogue step can be activated while the system is still outputting a voice output. It is not possible to start a new dialogue.

Essential voice commands

Notes on voice commands

It is not necessary to use exact voice commands to open a specific function. The voice assistant also understands you when you use your colloquial language. Some examples are listed below. For some languages, these examples are only available to a limited extent.

Examples of navigation voice commands

You can operate the navigation with the voice assistant. The following list provides only a small selection of the possible navigation voice commands.

Note

The best results are achieved with voice input for addresses if the address is spoken in one of the official languages within a country.

- Search for a rest area.
- Take me to Munich.
- How is the traffic on the route?
- Show my last destinations.
- End navigation.
- Show me the map.

Examples of telephone voice commands

You can use the voice assistant to operate telephones connected to the multimedia system. The following list provides only a small selection of the possible telephone voice commands.

- Call Peter Müller.
- Dial 0711 17 0.
- Show me the contact Petra Meier.
- Show me the call list.
- Redial.

Examples of radio voice commands

Depending on the vehicle equipment, you can operate the radio with the voice assistant. The following list provides only a small selection of the possible radio voice commands.

- Switch to AM.
- Play Radio 2.
- Play 102.3 FM.
- Switch on the radio.

Examples of media voice commands

You can use the voice assistant to operate connected media sources and online music. The following list provides only a small selection of the possible media voice commands.

- Louder/quieter.
- Next track/previous track.
- Switch to USB.
- Switch on random playback.
- Play Helene Fischer on USB.

Examples of vehicle voice commands

You can use the voice assistant to operate vehicle settings and vehicle functions. The following list provides only a small selection of the possible vehicle voice commands.

Note

If no seat is stated in commands, the action is automatically executed for the seat from which the command was given or for the function closest to the seat.

- I'm cold.
- Set the heating to level 3.
- Switch on the light.
- What is my kilometre reading?
- What is the remaining range?

Overview and operation

Overview of the multimedia system

Danger

Risk of distraction by information systems and communications equipment

If you operate information systems and communications equipment integrated in the vehicle when driving, you may be distracted from what is happening in traffic.

You may also lose control of the vehicle.

- ► Only operate this equipment when the traffic situation permits.
- ► If this cannot be ensured, stop the vehicle as soon as possible, paying attention to road and traffic conditions. Pay attention to the traffic conditions.
- ► Make the entries when the vehicle is stationary.

You must observe the legal requirements for the country in which you are currently driving when operating the multimedia system.

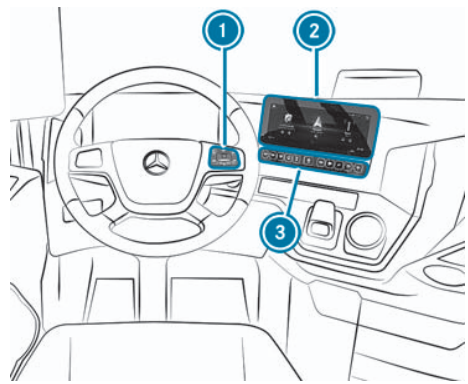

You can operate the multimedia system with the following central controls:

- Touch Control ①
  Operation takes place using cursor control.
- Multimedia system display ②
- Buttons on the operating strip ③

Notes on the multimedia system display

Observe the notes on caring for the interior.

The visibility of the displays is affected by the following conditions:

- Seat position
- Setting of the image position
- Light conditions
- Wet carriageway
- Objects on the display cover
- Polarisation in sunglasses

Automatic temperature switch-off

if the temperature is too high, the brightness is initially reduced automatically. The multimedia system display may then switch off completely for a while.

Home screen overview

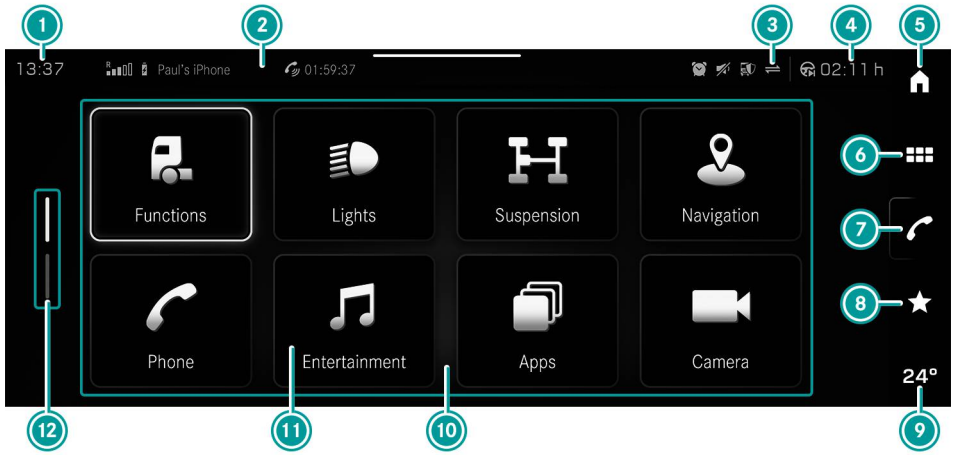

Home screen

1. Time
2. Context-based status bar
3. Connection status to the telematics server
4. Tachograph display
5. Opens the home screen
6. Opens the virtual switch
7. Telephone functions
8. Favourites
9. Temperature display for climate control
10. Central display area
11. Application
12. Side area display

The following options are available:

- Functions
- Lights
- Suspension
- Navigation
- Telephone
- Entertainment
- Apps
- Camera (optional)
- Timer control

- Status
- Settings

Touch Control

Operating Touch Control (multimedia system)

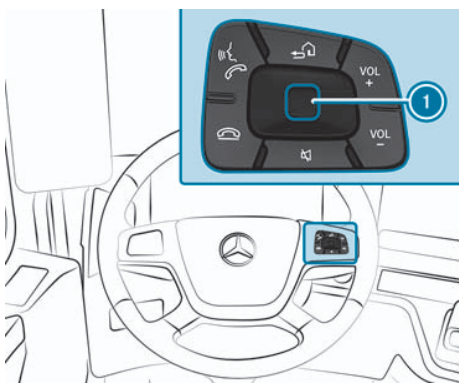

Right-hand button group on the multi-function steering wheel

1 Navigation in the multimedia system:
Swipe using Touch Control
Confirm/select

Home screen and Back button (multimedia system)

Vol. + Increases the volume

Vol. – Decreases the volume

Mute

End/reject call

Make/accept call

Activate voice control

- ► **To select a menu item:** swipe up, down, left or right on Touch Control 1.
- ► Press Touch Control 1.
- ► **To open a menu or list:** Press Touch Control 1.
- ► **To close the menu or list:** Press the button .
- ► **Moving the digital map:** Swipe in all directions.

Switching acoustic operating feedback for the Touch Control on or off

Multimedia system:

► ▶▶ Settings ▶▶ System ▶▶ Controls

- ► Select Acoustic operating feedback.
- ► Set Normal, Loud or Off.

If the function is activated, you will hear a clicking sound when scrolling in a list. When the beginning or end of the list is reached you will hear another clicking sound.

Operating the touchscreen

Tapping

- ► **To select a menu item or entry:** Tap on a symbol or an input.
- ► **Character entry via keyboard:** Press briefly on a key.

Single-finger swipe

- ► **Navigating in menus:** Swipe up, down, left or right.
- ► **Moving the digital map:** Swipe in all directions.

Two-finger swipe

- ► **To increase or decrease the map scale:** Pull two fingers apart or together.
- ► **To turn the map:** Use two fingers to turn to the left or right.

Touching, holding and moving

- **To move the map:** Touch the touchscreen and move your finger in any direction.
- **To set the volume on a scale:** Touch the touchscreen and move your finger to the left or right.

Touching and holding

- **To call up a global menu in applications:** Touch and hold the touchscreen until menu OPTIONS appears.

Applications

Calling up applications using the operating strip

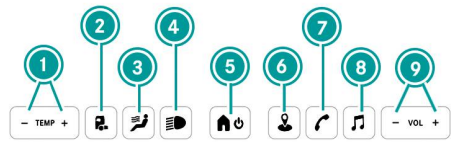

Operating panel

1. Decrease/increase temperature
2. Functions
3. Air conditioning
4. Lights
5. Switching on/off, open the home screen
6. Navigation
7. Telephone
8. Entertainment
9. Decrease/increase volume

- **To call up the application:** press the desired button.

Calling up applications using the home screen

The home screen is displayed on the multimedia system display when you start the vehicle.

- Select the application by swiping and tapping.

or

- Press the button on the Touch Control.

or

- Tap the icon in the multimedia system display .
  - ◁ The applications are displayed.
- Swipe and tap to select the application.

Switch the sound on/off

Switch sound off/on at the multifunction steering wheel

- **Deactivation:** Press the button .
  - ◁ The symbol is displayed in the status line of the display.

- **Switching on:** Press the [🔇] button or change the media source.

Adjusting the volume

On the multifunction steering wheel

- **To increase or decrease the volume:** Press Vol. [+] or Vol. [−] button.
  - ◁ The volume of the current radio or media source is set.

The volume of other audio sources can be adjusted separately.

Adjust the volume in the following situations:

- during voice output of the voice control system
- During a traffic announcement
- During a navigation announcement

Favourites

Overview of favourites

Favourites offer you quick access to frequently used applications.

Switches and assistance systems can be stored as favourites.

Calling up favourites

- Tap on [★].

Adding favourites

- Tap on [★].
  - ◁ The favourites are displayed.
- Tap on [✎].
- Select a favourite.

Entering characters

Using the character input function

⚠ **Danger**

Risk of distraction by information systems and communications equipment

If you operate information systems and communications equipment integrated in the vehicle when driving, you may be distracted from what is happening in traffic.

You may also lose control of the vehicle.

- Only operate this equipment when the traffic situation permits.
- If this cannot be ensured, stop the vehicle as soon as possible, paying attention to road and traffic conditions. Pay attention to the traffic conditions.
- Make the entries when the vehicle is stationary.

You must observe the legal requirements for the country where you currently are when operating the multimedia system.

Character entry can be carried out with these control elements:

- Touch Control
- Touchscreen (multimedia system display)

Characters are entered on the Touch Control using cursor control.

Character input can be started with a control element and resumed with another.

► When the keyboard is shown, enter the characters on the control element by swiping and pressing or by tapping (touchscreen).

You can use the character input function in the following situations, for example:

- Renaming a favourite.
- Entering a telephone number.

Entering characters on the touchscreen

Requirements

- An online connection is required for some functions.

Keyboard overview

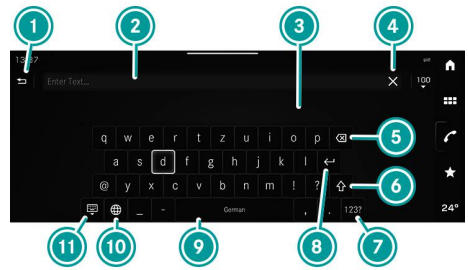

Keyboard

1. Back
2. Input line
3. Show suggestions during entry (if available)
4. Delete entry
5. Delete
   Tap: Delete the last character entered
   Touch and hold Delete entry
6. Tap: Switch between upper and lower case letters
   Press and hold: Set upper case letters permanently
7. Switch to digits and special characters (level°2)
   ABC: Switch to letters (level 1)
8. Confirm entry
9. Enter a space
10. Select keypad language
11. Hide keypad

► Tap a character input field.
  ◁ The keyboard is shown.
► Press briefly on a character key.
  ◁ The character is entered in input line 2. Suggestions are shown in 3.
► **Select suggestion:** Selecting one of the suggestions.
► If available, display additional suggestions with < or >.
► Resume character input.
► **To enter alternative characters:** Press and hold a character.
► Select the character.
► **To end character entry:** Press the ⮌ button.

Selecting the keyboard for character entry

Multimedia system:

Settings ▶▶ System ▶▶ Controls ▶▶ Keyboards ▶▶ Select keyboards

- Select the keyboard language in the list.

System settings

Display

Configuring display settings

Requirements

- The vehicle is stationary.

Multimedia system:

Settings ▶▶ System

Selecting display style

- Select Display style.
- Select Classic or Advanced.

Screen brightness

- Select Screen brightness.
- Set the brightness value.

Switch display on or off

- **Switching off:** Display off workshop.
- **Switching on:** Press a button on the control bar.

Time and date

Notes on time and date

Note

If a tachograph or GPS device is available in the vehicle, the time and date are automatically set according to the selected time zone (→ Page 183).

Note

The correct time is a requirement for the following functions:

- Route guidance with time-dependent traffic routing
- Calculation of the expected time of arrival
- Alarm function

Setting the time and date automatically

Multimedia system:

Settings ▶▶ System ▶▶ Time and date

- Deactivate Manual time adjustment.
  - ◁ The time and date are set automatically for the selected time zone and summer time option.

Setting the time and date manually

Multimedia system:

Settings ▶▶ System ▶▶ Time and date

- Switch on Manual time adjustment.
- **Setting the time:** Set time workshop.
- **Setting the date:** Set date workshop.

Setting the time and date format

Multimedia system:

Settings ▶▶ System ▶▶ Time and date ▶▶ Set format

- Select the time and date format in the list.

Setting the time zone

Multimedia system:

Settings ▶▶ System ▶▶ Time and date ▶▶ Time zone

- Select a country.
  - ◁ The set time zone is displayed behind Time zone.

Setting the alarm clock

The Alarm menu shows buttons for up to 15 alarms. Only the alarm whose button was last pressed is active. If no repetition is set, the wake-up alarm is active once. When a new alarm clock is set up, it is active.

Multimedia system:

Alarm

- Press [+].
  - ◁ An alarm with preset values is displayed.
- Tap the alarm.
- Enter the desired values.
- Confirm the values.

Connectivity

Bluetooth®

Bluetooth® functions

You can use Bluetooth® to connect your mobile phone to the multimedia system and use the following functions, for example:

- Hands-free system with access to the following options:
  - Contacts
  - Call lists
- Listening to music via Bluetooth® audio

Bluetooth® is a registered trademark of Bluetooth Special Interest Group (SIG) Inc.

Note

Bluetooth® is not available in all countries.

Wi-Fi

Wi-Fi connection overview

The WiFi network in your vehicle is used for Apple Car Play® and Android Auto.

The following connection options are available:

- Wi-Fi connection
  The Wi-Fi connection to a Wi-Fi-capable device, e.g. the customer's mobile phone, or a tablet PC, is established.

It is possible to use the following methods to establish a connection:

- WPS PIN
  Connect to a secure Wi-Fi network using a PIN.

Activate/deactivate Wi-Fi

Multimedia system:

Settings ▶▶ Connectivity ▶▶ Wi-Fi setup

- ▶ Switch Wi-Fi on or off.

Setting Wi-Fi encryption

Multimedia system:

Settings ▶▶ Connectivity ▶▶ Wi-Fi setup

- ▶ Select Wi-Fi encryption.
- ▶ Select the encryption in the list.

System language

Notes on the system language

This function allows you to determine the language for the menus and the navigation messages. The selected language affects the characters available for entry. The navigation announcements are not available in all languages. If a language is not supported, the navigation announcements will be in English.

Setting the system language

Multimedia system:

Settings ▶▶ System ▶▶ Language

- ▶ Set the language.

Note

If you are using Arabic map data, the text information can also be shown in Arabic on the navigation map.

Setting the units

Multimedia system:

Settings ▶▶ System ▶▶ Units

- ▶ Select the category from the list.
- ▶ Select the unit.

Resetting the multimedia system

Multimedia system:

Settings ▶▶ System ▶▶ Factory settings

Personal data is deleted, for example:

- Station presets
- Connected mobile phones

Audio

Sound settings

Multimedia system:

Settings ▶▶ System ▶▶ Audio

The following functions are available:

- Volume control
- Balance
- Fader
- Radio settings
- Automatic volume adjustment

Tachograph

Notes on tachographs

The information displayed in the tachograph menu is not legally binding. Only the values displayed on the tachograph itself apply.

Calling up the tachograph menu

Multimedia system:

Overview of tachograph menu

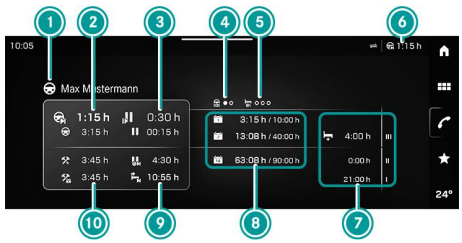

Overview of tachograph menu

1. Current activity
2. Driving times
3. Rest times
4. Driving time increases to 10h
5. Rest time reductions to 9h
6. Currently most relevant information for the driver
7. Reduced weekly rest period to be compensated in relation to
   I last week
   II week before last week
   III week before week before last week
8. Daily/weekly/fortnightly driving time
9. Driving times/rest periods
10. Working hours (including driving times)

Tachograph menu symbols

Current activity symbols

Symbol	Meaning
	Steering
	Other work
	Ferry crossing/train journey
	Calm
	Availability
OUT	Out of Scope

Time symbols

Symbol	Meaning
	Remaining driving time
	Elapsed driving time
	Next break time
	Remaining break time
	Elapsed break time
	Remaining rest period
	Daily driving time
	Weekly driving time
	Fortnightly driving time
	Continuous working time including driving time
	Total daily working time including driving time
	Time remaining until the start of the next rest period
	Next driving time after break
	Next driving time after rest period

Navigation

Notes on navigation

Danger

Risk of distraction by information systems and communications equipment

If you operate information systems and communications equipment integrated in the vehicle when driving, you may be distracted from what is happening in traffic.

You may also lose control of the vehicle.

- ► Only operate this equipment when the traffic situation permits.
- ► If this cannot be ensured, stop the vehicle as soon as possible, paying attention to road and traffic conditions. Pay attention to the traffic conditions.
- ► Make the entries when the vehicle is stationary.

When operating the system, adhere to the legal regulations of the country you are currently in.

The navigation system calculates the route to the destination without taking into account, for example:

- Traffic lights
- Stop signs and right-of-way signs
- Parking and stopping restrictions
- Road narrowing
- Other road and traffic controls and regulations

If reality does not match the data on the digital map, the navigation system may give incorrect navigation instructions, e.g. by changing the route or changing the direction of a one-way street.

For this reason, always observe road and traffic rules and regulations when driving. Traffic regulations always take precedence over the system's navigation announcements.

Information on GPS reception

Position finding and route guidance take place using GPS (**G**lobal **P**ositioning **S**ystem). Correct functioning of the navigation system depends, amongst other things, on the level of GPS reception. In certain situations, GPS reception may be impaired, there may be interference, or there may be no reception at all, e.g. in tunnels or multi-storey car parks.

You will find information on the GPS status in the Fleetboard portal under "Information".

Navigation menu

Call up the navigation system menu

Multimedia system:

- ► Alternatively: Press the button on the control bar at the bottom of the multimedia display.

Overview of the navigation menu

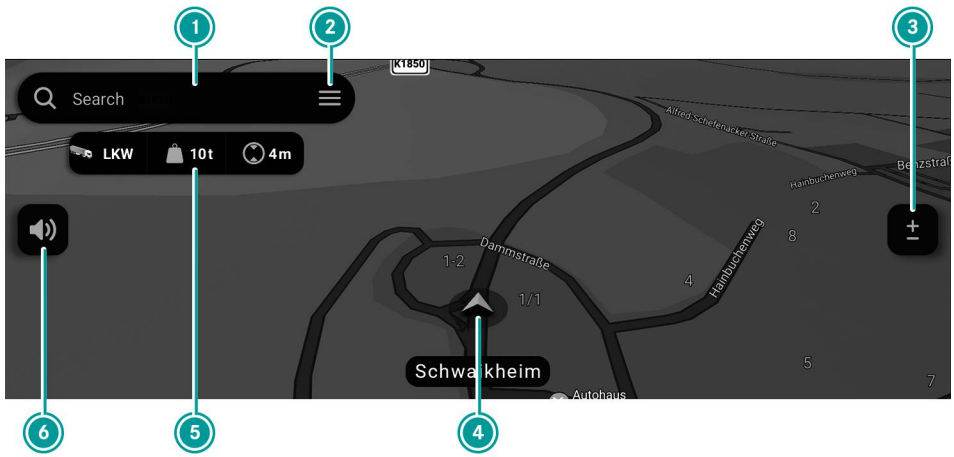

Overview of the navigation menu

1. Address input field
2. Navigation settings
3. Map view and zoom level
4. Current vehicle position
5. Selected vehicle profile
6. Navigation announcements on/off

Destination entry

Calling up the destination entry menu

- Tap on the address input field (1) in the navigation menu.

Overview of destination entry menu

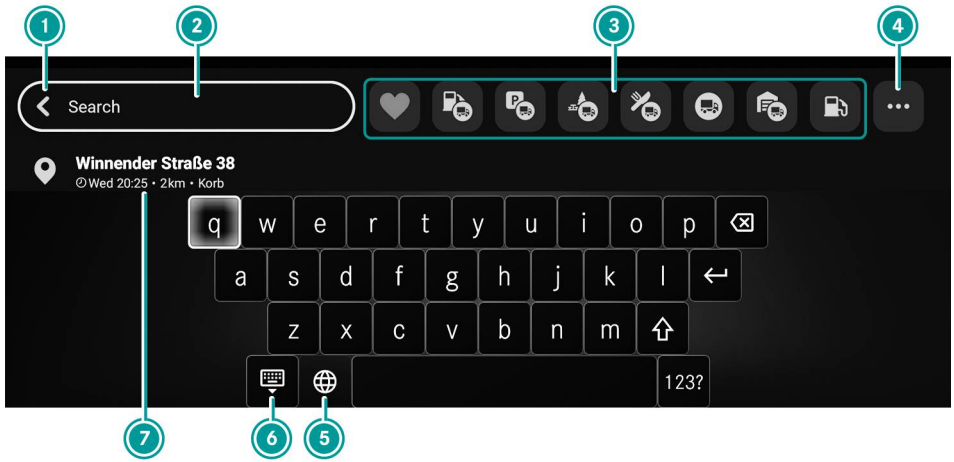

Overview of destination entry menu

1. Return to navigation menu
2. Show address input field/keyboard
3. Special destinations
4. Configure special destinations
5. Keyboard language
6. Hide keypad
7. List of previous destinations

Selecting a destination from addresses

- Call up the destination entry menu (→ Page 187).
- Enter the address in the address entry field 2.
- Select the desired destination from the results list.
  - ◁ The destination is displayed on the map.

Selecting a destination from special destinations

- Call up the destination entry menu (→ Page 187).
- Tap on a special destination type ③.
- Select the desired special destination from the results list.
  - ◁ The destination is displayed on the map.

Selecting a destination from previous destinations

- Call up the destination entry menu (→ Page 187).
- Hide the keyboard ⑥.
- Select a destination from the list of previous destinations ⑦.
  - ◁ The destination is displayed on the map.

Selecting a destination on the map

- Search for a destination on the map by moving and zooming.
- Select the destination on the map.
  - ◁ The address nearest to the selected point is displayed.

Selecting a destination from saved locations

- Call up the destination entry menu (→ Page 187).
- Tap [♥].
- Select Places.
  - ◁ The list of saved locations is displayed.
- Select a destination from the list.
  - ◁ The destination is displayed on the map.

Selecting a destination from saved routes

- Call up the destination entry menu (→ Page 187).
- Tap [♥].
- Select Routes.
  - ◁ The list of saved routes is displayed.
- Select a route from the list.
  - ◁ The route is displayed on the map.

Configure special destinations

Note

8 special destination types ③ can be displayed in the destination entry menu.

- Call up the destination entry menu (→ Page 187).
- Tap [•••].
  - ◁ The Nearby places menu appears.
- Tap Edit.
- Drag the desired special destination types from area Other places to area Shortcuts in Search bar.
- Tap Save.

Directions

Displaying the directions menu

- Select a destination.
- Select Get directions.

◁ The route to the selected destination is calculated and displayed on the map.
◁ The route planner is displayed.

Overview of directions menu

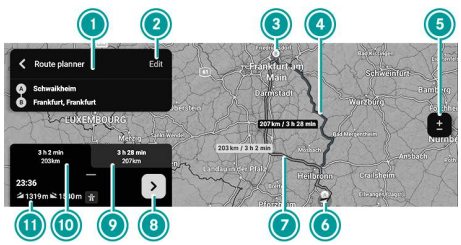

Directions menu overview

1. Route planner
2. Edit route
3. Route destination
4. Alternative route on the map
5. Map view and zoom level
6. Current vehicle position
7. Current route on the map
8. Start route guidance
9. Alternative route
10. Selected route
11. Route information

Edit route

Activating editing

- ▶ Select a destination (→ Page 187).
- ▶ Display the directions (→ Page 189).
- ▶ In the route planner, tap Edit.

Route planner overview

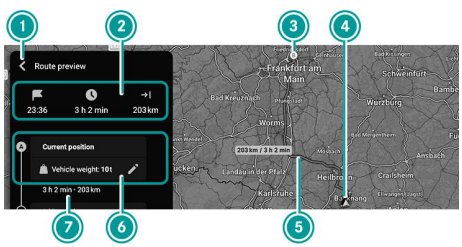

Route planner overview

1. Back/save route
2. Information on the route destination (arrival time, driving time, distance away)
3. Route destination
4. Current vehicle position
5. Current route on the map
6. Vehicle weight at intermediate destination
7. Driving time and distance to the next intermediate destination

Adding an intermediate destination

- ▶ Swipe to navigate to the point on the route where you want to insert an intermediate destination.
- ▶ Tap Add waypoint to add an intermediate destination.

Deleting intermediate destinations

- ▶ Navigate to the intermediate destination to be deleted by swiping.
- ▶ Tap [✕] to delete the intermediate destination from the route.

Changing the order of destinations

- ▶ Navigate to the destination to be moved to another position on the route by swiping.
- ▶ Tap and hold [☰] and drag the destination to another position on the route.

Changing the vehicle weight at an intermediate destination

The vehicle weight can be changed in the vehicle profile at each intermediate destination. Since the vehicle weight is taken into account when calculating the route, it can influence the range of the vehicle.

- Navigate to the intermediate destination at which the vehicle weight is to be changed by swiping.
- Tap [✎] next to the vehicle weight.
- Enter a new vehicle weight.

Route guidance

Start route guidance

- Select a destination (→ Page 187).
- Display the directions (→ Page 189).
- Tap on [➔].

Overview of route guidance

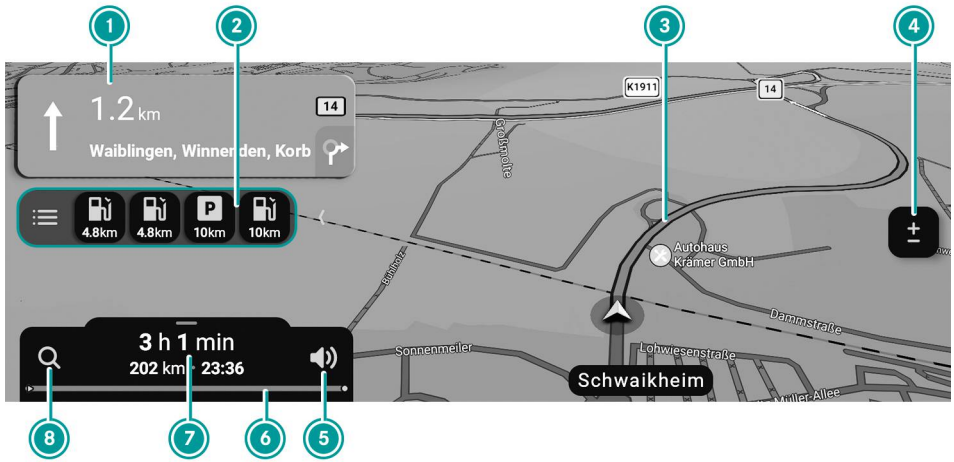

Overview of route guidance

1. Directions
2. Widget for nearby special destinations
3. Current route on the map
4. Map view and zoom level
5. Navigation announcement on/off
6. Progress bar
7. Information bar
8. Search for new destination

Directions

The directions (1) contain the following information:

- The number of the road you are currently driving on
- The next two driving manoeuvres in the form of direction arrows
- The distance remaining until the next driving manoeuvre

Widget for nearby special destinations

The nearby special destinations widget ② shows the four nearest special destinations.

- ► Tap on a special destination in the widget to add it to the route as the next intermediate destination.
- ► Tap [≡] to select the displayed special destination categories.
- ► Tap [<] to collapse the widget.

Map view and zoom level

- ► Tap Map view and zoom level ④.
- ► Tap [+] to zoom in on the map.
- ► Tap [–] to zoom out of the map.
- ► Tap [2D] or [3D] to change the map display type.

Information bar

The information bar ⑦ displays the following information:

- The calculated driving time to the destination or next intermediate destination
- The distance to the destination or the next intermediate destination
- The calculated arrival time at the destination or the next intermediate destination
- Progress bar

Note

Whether this information is displayed for the destination or the next intermediate destination can be selected in the settings.

Cancelling a route

- ► Tap on the information bar ⑦.
- ► Tap Cancel route.

Traffic

Live Traffic

The service Live Traffic displays real-time traffic information on the navigation map. When route guidance is active, the route is dynamically adapted to the current traffic situation.

Note

Live Traffic can only be used with an active TruckLivecontract. Contact a qualified specialist workshop, e.g. the nearest Mercedes-Benz Trucks Service Centre.

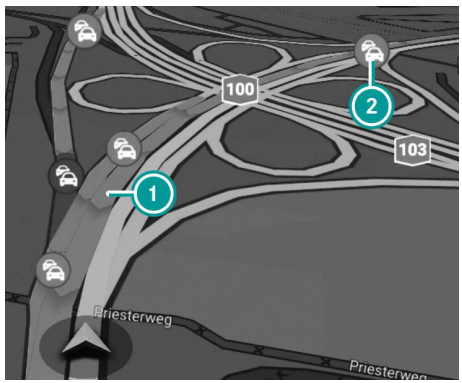

Live Traffic

1. Traffic disruption
2. Traffic disruption symbol

The arrowheads on a 1 traffic disruption symbol indicate the direction of the traffic disruption.

The 2 traffic disruption symbols indicate the type of traffic disruption, such as an accident for example.

The colour of traffic disruption and traffic disruption symbols indicate the severity of the traffic disruption:

- Green: Slow traffic
- Orange: Heavily congested traffic
- Red: Standing traffic

► **Displaying information on traffic disruptions** Tap the traffic disruption on the map.

◁ The traffic disruption appears zoomed in on the map.
The following information about the traffic disruption is displayed:

- The type of traffic disruption (e.g. accident)
- Severity of the traffic disruption (slow, heavily congested or standing traffic)
- Length of delay
- The length of the traffic disruption

Connected Traffic Warnings

The service Connected Traffic Warnings points out current hazard areas.

Note

Connected Traffic Warnings can only be used with an active TruckLivecontract. Contact a qualified specialist workshop, e.g. the nearest Mercedes-Benz Trucks Service Centre.

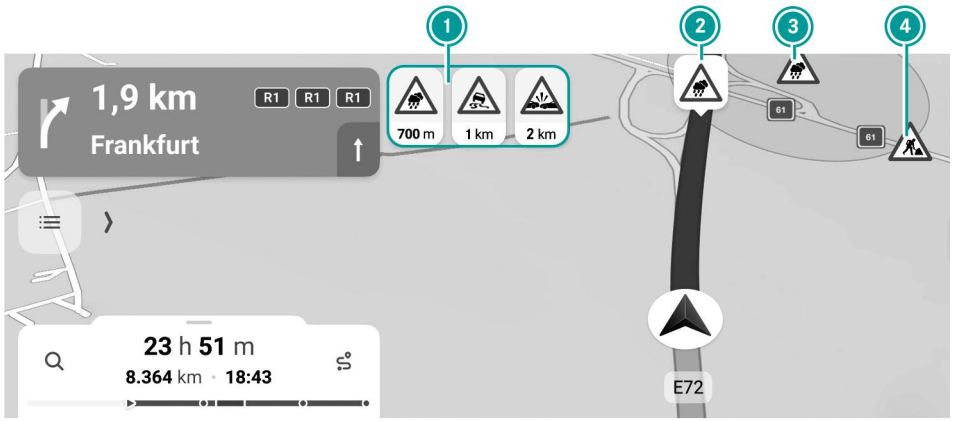

Connected Traffic Warnings

1. Overview of the next hazard areas
2. Hazard area along the navigation route or anticipated route
3. Weather event with hazard area
4. Hazard area off the navigation route or anticipated route

Types of hazard areas:

Symbol	Meaning
	General hazard area
	Construction site
	Wrong-way driver
	Smooth carriageway
	Mist
	Emergency braking
	Breakdown
	Heavy rain
	Accident

A hazard message is shown with a ② / ④ symbol on the navigation map in the multimedia system display. Depending on the severity of the hazard, an additional warning message is shown on the multimedia system display or the instrument cluster display. In case of serious hazards, an additional acoustic voice warning is issued.

A weather event such as heavy rain or fog and the corresponding hazard area are shown on the navigation map with a symbol ③ and a light blue area.

The overview of the next hazard areas ① shows the hazards in front of the vehicle in ascending order along the navigation route (with active route guidance) or along the anticipated route (with inactive route guidance) ②. The overview shows up to three hazard areas and the respective distance from the vehicle. When the vehicle reaches the next hazard area, it is removed from the overview. Hazard areas off the navigation route or the anticipated route ④ are not displayed in the overview.

Navigation settings

Vehicle profile

Note

The settings in the vehicle profile will be taken into account during the route calculation when possible. Depending on local conditions, the navigation system may not always be able to include all settings for route calculation.

Multimedia system:

Vehicle

Creating a new vehicle profile

- Tap on [+].
- Adjust the settings according to the vehicle.

Editing the vehicle profile

- Tap on [✎].
- Adjust the settings according to the vehicle.

Deleting a vehicle profile

- Tap [✎].
- Tap Delete vehicle profile.

Settings

Multimedia system:

Settings

The following categories are available:

- Route & Navigation
- Notifications
- Map view & Units

Map update

Note

In order to use Remote Map Update, you must have an active TruckLive contract.

If you do not have an active TruckLive contract, contact a qualified specialist workshop, e.g. the nearest Mercedes-Benz Trucks Service Centre.

If a map update is available, an orange dot will appear next to [≡] in the multimedia system and the message Map update available will be displayed.

Requirements

- The vehicle is switched on.
- The multimedia system has internet reception.

Multimedia system:

► Select Update All and follow the instructions.

◁ The map is updated.

Note

If problems occur during the map update, contact a qualified specialist workshop, e.g. the nearest Mercedes-Benz Trucks Service Centre.

Overview of the maps available

Available maps	Live Traffic **Available in the navigation system:**
Akrotiri and Dhekelia	No
Albania	No
Andorra	Yes
Australia	No
Azores	No
Belgium	Yes
Bosnia and Herzegovina	Yes
Bulgaria	Yes
Ceuta/Melilla	No
Chile	No
Denmark	Yes
Germany	Yes
Estonia	Yes
Faroe Islands	No
Finland	Yes
France	Yes
Gibraltar	Yes
Greece	Yes

Available maps	Live Traffic **Available in the navigation system:**
Greenland	No
Ireland	Yes
Iceland	No
Italy	Yes
Jersey (Channel Islands)	No
Canary Islands	No
Croatia	Yes
Latvia	Yes
Liechtenstein	No
Lithuania	Yes
Luxembourg	Yes
Madeira	No
Malta	Yes
Macedonia	No
Moldova	No
Monaco	No
Montenegro	No
New Zealand	No
Netherlands	Yes
Northern Ireland	Yes

Navigation

Available maps	Live Traffic **Available in the navigation system:**
Norway	Yes
Austria	Yes
Poland	Yes
Portugal	Yes
Romania	Yes
San Marino	No
Sweden	Yes
Switzerland	Yes
Serbia	No
Slovakia	Yes
Slovenia	Yes
Spain	Yes
Spitsbergen	No
Czechia	Yes
Hungary	Yes
Vatican City	No
United Kingdom	Yes
Vogtei Guernsey (Channel Islands)	No
Cyprus	Yes

Telephony

Basic information

Telephone menu overview

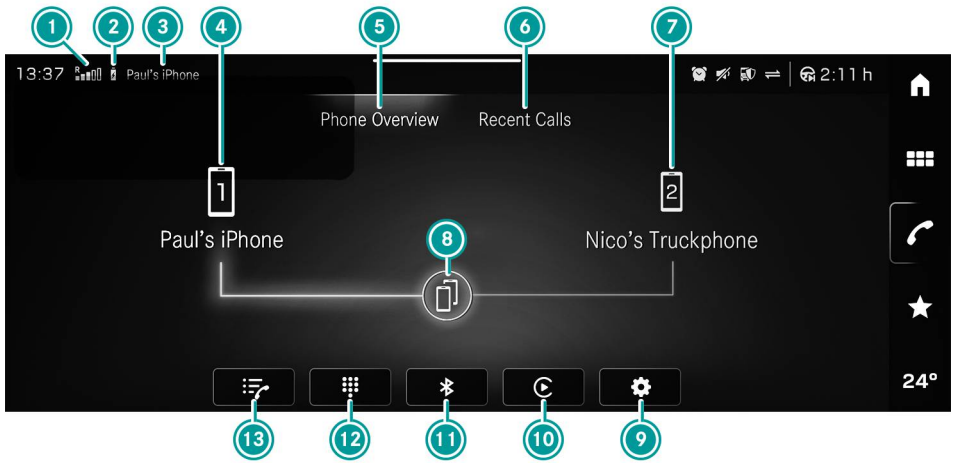

Telephone menu

1. Signal strength of the mobile phone network
2. Battery status of the connected mobile phone
3. Bluetooth® device name of the connected mobile phone
4. Mobile phone in foreground
5. Overview of connected devices
6. Caller list
7. Mobile phone in background
8. Switch between primary and secondary mobile phone
9. Settings
10. Apple CarPlay® or Android Auto
11. Bluetooth®
12. Numerical pad
13. Contacts

The Bluetooth® interface is available for you to use on your phone. The mobile phone is connected directly via the multimedia system.

Symbols 1 to 3 are not shown until a mobile phone has been connected to the multimedia system. The symbols depend

on your mobile phone and your mobile phone network provider.

Bluetooth® profile overview

Bluetooth® profile of the mobile phone	Function
PBAP (**P**hone **B**ook **A**ccess **P**rofile)	Contacts are automatically displayed in the multimedia system
HFP (**H**ands **F**ree **P**rofile)	Voice control is active
A2DP (**A**dvanced **A**udio **D**istribution **P**rofile)	Processing audio signals
AVRCP (Player)	

Notes on telephony

Danger

Risk of distraction from operating integrated communication equipment while the vehicle is in motion

If you operate information systems and communications equipment integrated in the vehicle when driving, you may be distracted from what is happening in traffic.

You may also lose control of the vehicle.

- ▶ Only operate this equipment when the traffic situation permits.
- ▶ If this cannot be ensured, stop the vehicle as soon as possible, paying attention to road and traffic conditions. Pay attention to the traffic conditions.
- ▶ Make the entries when the vehicle is stationary.

Danger

Risk of accident from operating mobile communication equipment while the vehicle is in motion

Mobile communication devices distract the driver from traffic around them. This can also cause the driver to lose control of the vehicle.

- ▶ As a driver, only operate mobile communication devices when the vehicle is stationary.
- ▶ As a vehicle occupant, only use mobile communication devices in the designated area, e.g. in the rear passenger compartment.

You must observe the legal requirements for the country in which you are currently driving when operating mobile communication equipment in the vehicle.

You can obtain further information from a Mercedes-Benz Trucks Service Centre.

Information on telephony

Call disconnection may occur when the vehicle is in motion in the following situations:

- An area may have insufficient network coverage.
- You move from one transmitter/receiver area (cell) into another and no voice channels are free.
- The SIM card used is not compatible with the network available.
- You are using a mobile phone with "Twincard" and the second SIM card is already logged in to the network.

The multimedia system supports calls in HD Voice® for better voice quality. To do this, the mobile phones and the mobile

phone providers of the call partners must support HD Voice®.

Depending on the quality of the connection, the voice quality may fluctuate.

Connecting a mobile phone

Requirements

- Bluetooth® is activated on the mobile phone (see the manufacturer's operating instructions).

Multimedia system:

→ ⌂ ▶▶ Phone ▶▶ ᛒ ▶▶ Connectivity

- ▶ Select Connect new device.
- ▶ Select a mobile phone.
  - ◁ A code is displayed in the multimedia system and on the mobile phone.
- ▶ **The codes match:** Confirm the code on the mobile phone.
- ▶ Allow or decline synchronisation of content on the mobile phone.
  - ◁ The mobile phone is connected to the multimedia system and displayed in the list of authorised devices.
  - ◁ A prompt appears asking whether Apple CarPlay® or Android Auto should also be connected.

Note

If the mobile phone is already in the list of authorised devices, it is automatically connected to the multimedia system.

Note

A total of up to 15 mobile phones can be authorised on the multimedia system.

Note

The mobile phone in the foreground can also be used as a Bluetooth® audio device.

Note

For iPhone®: You have the option of connecting the mobile phone to the multimedia system via Apple CarPlay®.

Connecting a second mobile phone (two phone mode)

Requirements

- A mobile phone is already connected to the multimedia system via Bluetooth®.

Multimedia system:

→ ⌂ ▶▶ Phone ▶▶ ᛒ ▶▶ Connectivity

- ▶ Select Connect new device.
- ▶ Select the mobile phone.
- ▶ Allow or decline synchronisation of content on the mobile phone.
  - ◁ The mobile phone is connected to the multimedia system and displayed in the list of authorised devices.

Note
If the mobile phone is already in the list of authorised devices, it is automatically connected to the multimedia system.

Interchanging mobile phones (two phone mode)

Multimedia system:

Phone

- Select .
  - The mobile phone in the background becomes the mobile phone in the foreground.

Changing the function of a mobile phone

Multimedia system:

Phone Connectivity Authorised devices

Activating a function

- Select a grey symbol in the line of a mobile phone.
  - The corresponding function is activated.

Deactivating a function

- **A function is active:** Select the colour symbol in the line of a mobile phone.
  - The mobile phone is disconnected from the multimedia system.
- **Several functions are active:** Select a colour symbol in the line of a mobile phone.
  - The corresponding function is deactivated.

Disconnecting a mobile phone

Multimedia system:

Phone Connectivity Authorised devices

- Select in the line of the mobile phone.
- **To disconnect:** Disconnect select.
  - If applicable, the mobile phone will be automatically reconnected when the vehicle is next started.

Calls

Telephone operation

Multimedia system:

Phone

Making a call by entering the numbers

- Select .
- Enter a number.
- Select .

Accepting a call

- Select Accept.

Reject/end a call

- Select Reject /End call.

Putting a call on hold and rejecting a call

- Select Call on hold.
  - The call is put on hold or rejected. Depending on the mobile phone, behaviour when rejecting a call may vary (see manufacturer's operating instructions).

- If the call is put on hold: Reject workshop.

Activating functions during a call

Functions available during a call

	End call
	Microphone off
	Numerical keypad (show to send DTMF tones)
	Transfer to phone (call is changed from hands-free mode to the telephone)

- Select a function.

Putting an active call on hold

- Tap on the contact or the call.
  - ◁ The call is put on hold.

Note

The call on hold can be ended any time or re-activated by tapping again.

Conducting a call with several participants

Requirements

- There is an active call (→ Page 202).
- Another call connection has been established.

Switching between calls

- **To switch calls:** Switch calls select.
- Select the contact.
  - ◁ The selected call is active. The other call is on hold.

Activating a call on hold

- Select the contact for the call on hold.

Ending the active call

- Select End call.

Note

On some mobile phones, the call on hold is activated as soon as the active call is ended.

Accept/reject a waiting call

Requirements

- There is an active call (→ Page 202).

If there is an incoming call while a call is being conducted, a notification is shown.

Depending on the mobile phone and the mobile phone network provider you will hear a knocking sound.

In addition, you will hear an acoustic signal in two phone mode, if the call is incoming on the other (still not active) mobile phone.

- Select Accept.
  - ◁ The incoming call is active. The previous call is put on hold if only one mobile phone is connected with the multimedia system. If, during a call, you accept another call on the other phone when in

two phone mode, the existing call will be ended. The previous call is put on hold.

► Select Reject.

Note

The function and behaviour depend on your mobile phone network provider and mobile phone (see the manufacturer's operating instructions).

Contacts

Information about the contacts menu

The contacts menu contains all contacts from existing data sources, e.g. mobile phone or memory card.

You can perform the following tasks from the contacts menu:

- Telephone operation
- navigate
- Additional options

The contacts on the mobile phone are displayed if a mobile phone is connected to the multimedia system and contact synchronisation has been enabled (→ Page 201).

Calling a contact

Multimedia system:

Phone

► Select Search contacts.
► Enter characters into the search field.
► Select the contact.
► Select the telephone number.
◁ The call is made.

Editing the format of a contact's name

Multimedia system:

Phone Connectivity Authorised devices

► Select a phone.
► Select Name format.

The following options are available:

- Surname, first name
- First name Last name

► Select an option.

Call list

Information on the call list

Depending on whether your mobile phone supports the PBAP Bluetooth® profile or not, this can have different effects on the presentation and functions of the call list.

The PBAP Bluetooth® profile is supported:

- The call lists from the mobile phone are shown in the multimedia system.
- When connecting the mobile phone, you may have to confirm the connection for the PBAP Bluetooth® profile.

The PBAP Bluetooth® profile is not supported:

- The multimedia system generates a call list itself as soon as calls are made in the vehicle.
- This list is not synchronised with the call lists on the mobile phone.

Making a call from the call list

Multimedia system:

► Select an entry.

Apple CarPlay®

Overview of Apple CarPlay®

Apple CarPlay® allows iPhone® functions to be used via the multimedia system. It is operated by touchscreen, touch control, or by Siri® voice control from the mobile phone. You can activate voice control by pressing and holding the button on the multifunction steering wheel.

Only one mobile phone at a time can be connected via Apple CarPlay® to the multimedia system.

The availability of Apple CarPlay® may vary according to the country.

Please note when using Apple CarPlay® that it is not suitable for route planning in commercial vehicles.

The service provider is responsible for this application and the services and content connected to it.

Note

Only use Apple CarPlay® with an original Apple iPhone®.

Information about Apple CarPlay®

Only one route guidance can be active at any time. If route guidance is active using Apple CarPlay®, it will be closed if route guidance is started on the multimedia system. If route guidance is active using the multimedia system, it will be closed if route guidance is started via Apple CarPlay®.

Connecting an iPhone® via Apple CarPlay®

Requirements

- The current version of your device's operating system is being used (see the manufacturer's operating instructions).
- The iPhone® is connected to the USB port using a suitable cable (Apple CarPlay® 1)
- The iPhone® is connected to the multimedia system via Bluetooth® (Apple CarPlay® 2)

Note

The full range of functions for Apple CarPlay® is only available with an Internet connection.

Multimedia system:

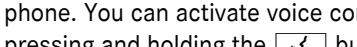

► Select a mobile phone.
► Tap on Start Apple CarPlay.

Exiting Apple CarPlay®

► Press the button .

Calling up Apple CarPlay®

Multimedia system:

[⌂] ▶▶ Phone

- Tap on [▶].

Ending Apple CarPlay®

Apple CarPlay® 1

- Disconnect the connecting cable between the iPhone® and multimedia system.

Apple CarPlay® 2

Multimedia system:

[⌂] ▶▶ Phone ▶▶ ✱ ▶▶ Connectivity ▶▶ Authorised devices

- Select a mobile phone.
- Tap on Disconnecting....

Android Auto

Overview of Android Auto

Android Auto allows the functions of Android smartphones to be used via the multimedia system. Operation is via touchscreen or voice control. You can activate voice control by pressing and holding the [🎤] button on the multifunction steering wheel.

Only one mobile phone at a time can be connected via Android Auto to the multimedia system.

The availability of Android Auto and Android Auto apps may vary depending on the country.

Note that Android Auto does not allow route planning in commercial vehicles. Using maps via Android Auto is still possible. Instead, route guidance can be started with full functionality on the multimedia system.

The service provider is responsible for this application and the services and content connected to it.

Note

Only use Android Auto with mobile phones approved for this purpose by Google.

Information about Android Auto

While using Android Auto, various functions of the multimedia system, e.g. the Bluetooth® audio media source, are not available.

Only one route guidance, whether via the multimedia system, Android Auto, or Apple CarPlay®, can be active at any one time. If additional route guidance is started during active route guidance, the active route guidance that was started first is ended.

Connect mobile phone via Android Auto

Requirements

- For safety reasons, the first activation of Android Auto on the multimedia

system must be carried out when the vehicle is stationary.

- The mobile phone supports Android Auto as of Android 5.0.
- The Android Auto app is installed on the mobile phone.
- In order to use the telephone functions, the mobile phone must be connected to the multimedia system via Bluetooth®. If a connection has not been established before, this is established when using the mobile phone with Android Auto.

Note

The full range of functions of Android Auto is only possible with an Internet connection.

Multimedia system:

[⌂] ▶▶ Phone ▶▶ ᛒ ▶▶ Connectivity ▶▶ Authorised devices

- ▶ Select a mobile phone.
- ▶ Tap on Start Android Auto.

Accept/reject the data protection provisions

When starting the application for the first time: A message with the data protection provisions is displayed

- ▶ Select Accept and install.

Quit Android Auto

- ▶ Press the button [⌂].

Calling up Android Auto

Multimedia system:

[⌂] ▶▶ Phone

- ▶ Tap on [⌃].

Ending Android Auto

Multimedia system:

[⌂] ▶▶ Phone ▶▶ ᛒ ▶▶ Connectivity ▶▶ Authorised devices

- ▶ Select a mobile phone.
- ▶ Tap on Disconnecting....

Vehicle data transmitted with Apple CarPlay® and Android Auto

Overview of transferred vehicle data

When using Android Auto or Apple CarPlay®, certain vehicle data is transferred to the mobile phone. This enables you to get the best out of selected mobile phone services. Vehicle data is not directly accessible.

The following system information is transmitted:

- Software release of the multimedia system
- System ID (anonymised)

The transfer of this data is used to optimise communication between the vehicle and the mobile phone.

To do this, and to assign several vehicles to the mobile phone, a vehicle identifier is randomly generated.

This has no connection to the vehicle identification number (VIN) and is deleted when the multimedia system is reset (→ Page 184).

The following driving status data is transmitted:

- The engaged transmission position
- A distinction between parked, standstill, rolling, and driving
- Day/night mode of the instrument cluster

The transfer of this data is used to alter how content is displayed to correspond to the driving situation.

The following position data is transmitted:

- Coordinates
- Speed
- Compass direction
- Acceleration direction

This data is only transferred while the navigation system is active, in order to improve it (e.g. so it can continue functioning when in a tunnel).

Wireless mobile phone charging

A mobile phone can be charged wirelessly via the mobile phone stowage compartment in the cockpit (→ Page 146).

Radio

Switching on the radio

Multimedia system:

► Alternatively: Press the button on the control bar at the bottom of the multimedia display.

Radio overview

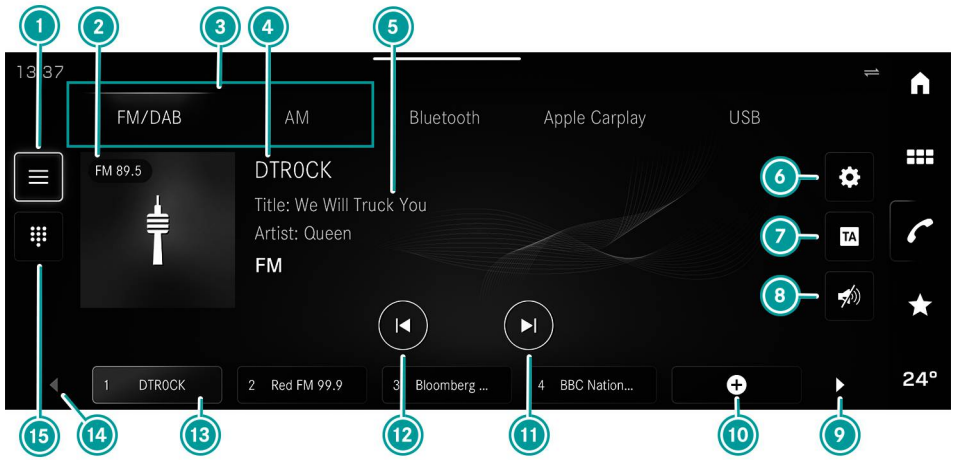

Radio overview

1. Station list
2. Station symbol and frequency
3. Frequency band
4. Station name
5. Track, artist and radio text
6. Settings
7. Traffic announcements
8. Mute
9. Other station presets
10. Storing a station
11. Next station in the station list
12. Previous station in the station list
13. Station preset
14. Other station presets
15. Frequency entry

Setting the frequency band

Multimedia system:

→ [⌂] ▸▸ Entertainment

▸ Select a frequency band (3).

Selecting a radio station via the presets

Multimedia system:

Entertainment

- Swipe the station presets ⑬ to the left or right to search for a stored station.
- Briefly tap on the station preset.

Selecting a radio station from the list of stations

Multimedia system:

Entertainment

- Tap on ①.
- Select a radio station from the list of stations.

Selecting a radio station via direct frequency input

Multimedia system:

Entertainment

- Tap on [⠿].
- Enter a frequency.

Storing radio stations

Multimedia system:

Entertainment

- Select a radio station.

Memory slots are available in station presets

- Tap on [+].

Replacing the entry in the station preset

- Press and hold the preset position of the radio station to be replaced.

Switching traffic announcements on and off

Multimedia system:

Entertainment

- Tap on ⑦.

Media

Information about media mode

Information about supported formats and data storage media

Danger

Risk of distraction when handling data storage medium

If you handle a data storage device while driving, you may be distracted from traffic conditions. You may also lose control of the vehicle.

- Only handle a data storage medium when the vehicle is stationary.

All DTS patents can be found online

dts TruVolume: http://patents.dts.com

Manufactured under licence from DTS Licencing Limited. DTS, its symbol, and both DTS and the symbol combined are all registered trademarks, and DTS Tru-Volume is a trademark of DTS, Inc.© DTS, Inc. All rights reserved.

Formats and data storage media supported by the multimedia system

Permissible file systems	FAT16, FAT32, NTFS
Permissible data storage media	USB devices, iPod®/ iPhone®, MTP devices, Bluetooth® audio devices
Supported formats	**Audio:** MP3, WMA, AAC, WAV, FLAC, ALAC

Note

Observe the following notes.

- Up to 50,000 supported files can be managed by the multimedia system.
- Data storage media up to 2°TB are supported (32bit address space).
- Due to the large variety of available music files in terms of encoders, sampling frequencies, and bitrates, playback cannot be guaranteed.
- It cannot be guaranteed that all USB devices can be played back due to the wide variety of USB devices available.
- Copy-protected music files or DRM (Digital Rights Management) encrypted files cannot be played back.
- MP3 players must support the Media Transfer Protocol (MTP).

Information on copyright protection and trademarks

Audio files that you create or reproduce yourself for playback are generally subject to copyright protection. In many countries, reproductions, even for private use, are not permitted without the prior consent of the copyright holder.

Make sure that you know about the applicable copyright regulations and that you comply with these.

Bluetooth overview

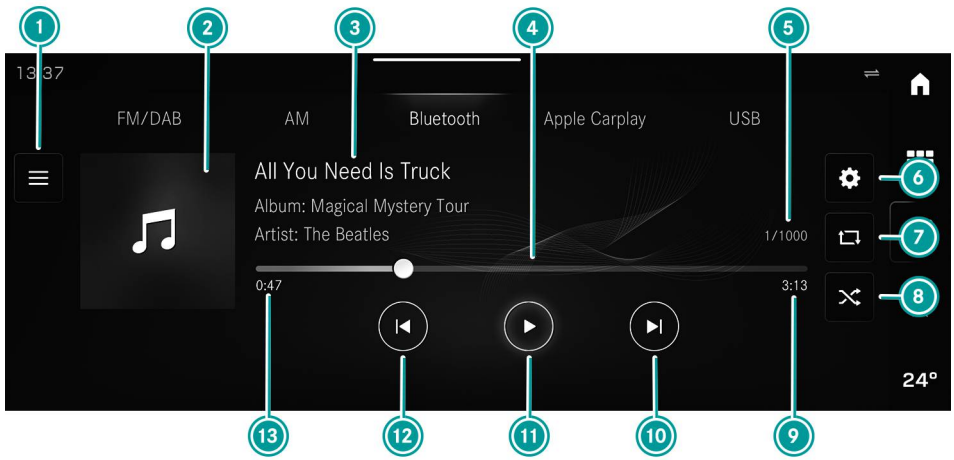

Bluetooth

1. Track list
2. Album cover
3. Track, album and artist
4. Timeline
5. Current track number/total number of tracks
6. Settings
7. Repeat
8. Random playback
9. Remaining playing time
10. Next track
11. Control playback
12. Previous track
13. Time played

USB overview

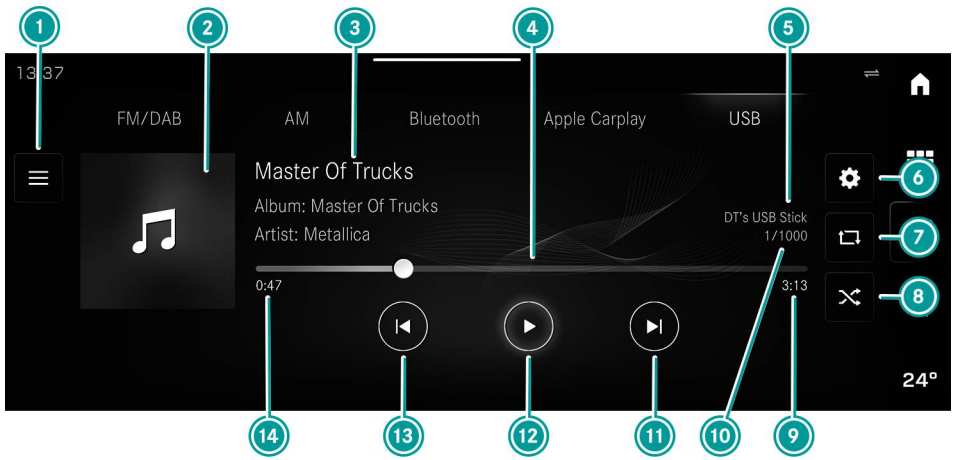

USB

1. Track list
2. Album cover
3. Track, album and artist
4. Timeline
5. USB medium name
6. Settings
7. Repeat
8. Random playback
9. Remaining playing time
10. Current track number/total number of tracks
11. Next track
12. Control playback
13. Previous track
14. Time played

Connecting data storage media to the multimedia system

Connecting USB devices

Note

Damage due to high temperatures
High temperatures can damage USB devices.

- Remove the USB device after use and take it out of the vehicle.

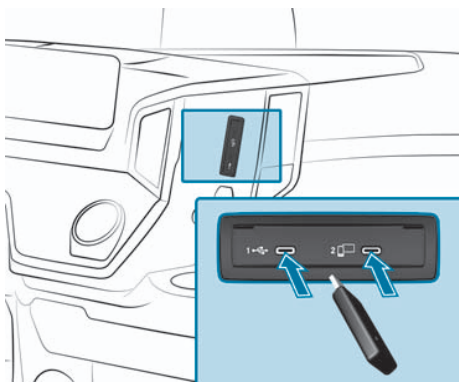

The multimedia connection unit is on the front passenger's side of the multimedia display and is equipped with two type C USB ports.

- Connect the USB device to the USB port.

Note

USB hubs are not supported by the multimedia system.

Note

When connecting multiple Apple® or ANdroid devices at the same time, the multimedia system will only connect to the device that is connected first. Additional devices connected at the same time will only be supplied with power.

Connecting Bluetooth® audio equipment

Note

The Bluetooth® audio functionality can only be used with the mobile phone in the foreground.

Note

Bluetooth® audio functionality is not available when a CarPlay® or Android Auto connection is active.

Requirements

- Bluetooth® is switched on on the audio device (see the manufacturer's operating instructions).
- The audio equipment supports the Bluetooth® audio profiles A2DP and AVRCP.
- The audio equipment is "visible" for other devices.

Multimedia system:

Phone ▶▶ ᛒ ▶▶ Connectivity

- Select Connect new device.
- Select an audio device.
  - ◁ A code is displayed in the multimedia system and on the audio device.
- **The codes match:** Confirm the code on the audio device.
- Allow or decline synchronisation of content on the audio device.
  - ◁ The audio device is connected to the multimedia system and displayed in the list of authorised devices.

Connecting previously authorised Bluetooth® audio equipment

- Select a Bluetooth® audio device from the list.

Starting media playback

Requirements

- A data storage medium or audio device is connected to the multimedia system.

Multimedia system:

- Select USBor Bluetooth as a media source.

Controlling media playback

Note

Players are often used on data storage media and audio devices (e.g. mobile phones). Compatibility cannot always be guaranteed. It is possible that not all playback functions will be available in individual cases.

Multimedia system:

- **To pause playback:** ⏸ select.
- **To continue playback:** ▶ select.
- **Repeat track:** select.

Note

For repeating there are the following options:

Select once: The active playlist is repeated.

Select twice: The current track is repeated.

Select three times: Repeat is deactivated.

- **To play back tracks in a random order:** select.
- **To move forward or backward within a track:** Tap at the relevant point of the timer bar.
- **To select the next track:** select.
- **To select the previous track:** select.
- **Fast track scrolling:** or press and hold or .
- **Show current track list:** Select the title image displayed.

Information about Truck Data Centre

The Truck Data Centre is the telematics control unit of Daimler Truck AG. It enables the transmission of all data generated by the vehicle and driver.

In addition to the Truck Data Centre, a valid framework agreement with a respective service booking is also required for use of digital services.

Information on the card reader for the Truck Data Center

The card reader for Truck Data Center enables driver identification from the Fleetboard DriverCard in the vehicle.

Press the buttons on the right-hand side of the front panel to display Fleetboard Home and Event Call services. Use the Service Call button in conjunction with Mercedes-Benz Uptime and for assistance in a responsive S24h call-out.

Overview of the card reader for the Truck Data Center

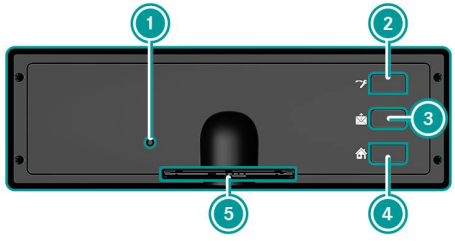

Card reader

1. Status LED
2. Service Call button
3. Event Call button
4. Home Call button
5. Card slot

LED indicator lamp display

The status of the Truck Data Center computer can be seen from the LED indicator lamp beside the card slot.

Note

If the Truck Data Center is not activated, the LED indicator lamp is not lit up.

LED indicator lamp displays

LED indicator lamp	Meaning
Flashes green	The card reader for the Truck Data Center is starting. The process can last several minutes.
Flashes green until the card reader for the Truck Data Center has booted up and then goes out.	The card reader for the Truck Data Center is operational.
Lights up continuously in red	The card reader for the Truck Data Center has detected a fault and is no longer operational. Turn the vehicle off and then on again. If the problem persists: Call Mercedes-Benz Trucks Support.

Reading out the Fleetboard DriverCard

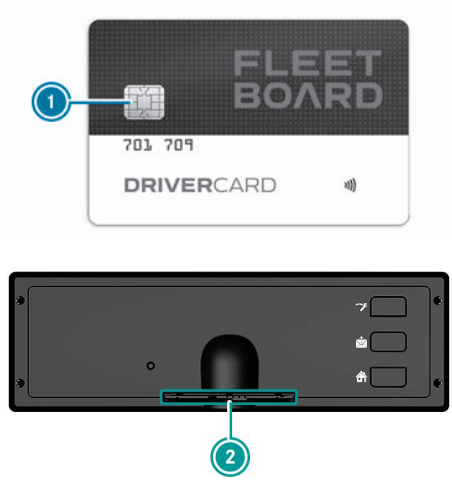

DriverCard

1. Fleetboard DriverCard memory chip
2. Card slot

The Fleetboard DriverCard is used to uniquely identify the driver for driver-related evaluation. Do not touch the contact surfaces of the memory chip 1 with your fingers. Otherwise, faults might occur when reading the memory chip 1.

- Switch the ignition lock to the drive position.

Before beginning the journey/trip:

- **Insertion of the driver card:** Insert the Fleetboard driver card with the lettering facing upwards and memory chip 1 facing towards the card slot 2 until it engages.

> **Note**
> If the Fleetboard DriverCard is inserted incorrectly, a warning tone sounds five times in quick succession.

After the end of the journey/trip:

- **Removal of the driver card:** Pull the Fleetboard DriverCard out of the bracket.

Sending messages

If there is an active framework agreement with an activated vehicle computer, a Service Call can be sent to headquarters using Truck Data Center.

→ ⌂ ▸▸ Operation ▸▸ Switch

- Switch the ignition lock to the drive position.

> **Note**
> Once the multimedia system is switched on it takes about two minutes for Truck Data Center to be operational.

- **Send a Service Call message/run telediagnostics:** Press the virtual button SERVICE CALL.
  - ◁ The indicator lamp on the multimedia system flashes red once. The Truck Data Centre computer generates the data to be sent. This takes about three minutes. Leave the ignition switched on while the data is being sent. Once the service message has been

successfully sent, the indicator lamp goes out and a message appears in the instrument cluster. The telediagnostics data has been updated.

- Turn the ignition to position 0.

If the indicator lamp lights up red for about four seconds, the service message has not been sent. In this case:

- Change the vehicle location.
- Send the service message again.

Connectivity services

Mercedes-Benz Trucks Uptime

Further information can be found under

https://www.uptime-info.mercedes-benz.com

or an authorised Mercedes-Benz Trucks Service Centre.

Fleetboard

Further information can be obtained from

https://www.fleetboard.com

Mercedes-Benz Trucks Remote 3.0 App

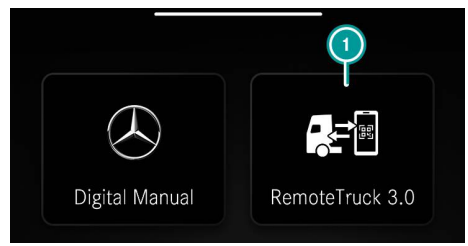

The service Mercedes–Benz Trucks Remote 3.0 App (1) enables a mobile device user to connect to the vehicle using the associated mobile app. It provides remote access to important status information, such as battery state of charge, monitors the charging process and more.

Download the app to your smartphone

- Search for the Mercedes-Benz Trucks Remote 3.0 App in App Store or Google Play Store. Keywords for the search include:
  - „Mercedes-Benz Trucks Remote 3.0 App“
  - „RemoteTruck 3.0“
- Download the Mercedes-Benz Trucks Remote 3.0 App.

Note
The first time you open the app, you must agree to the EULA terms and conditions.

- Press the “Agree EULA” button.
- Read the EULA and confirm at the end by pressing the "Agree & Proceed" button.

Connect the app and vehicle via QR code

Note

To use the “Connected Applications” service, you must have an active TruckLive contract. As the owner of the vehicle or fleet manager, register on the “My TruckPoint” platform and create an account. After successful registration, you can conclude a “TruckLive contract”.

Requirements

- The TruckLive contract is active.
- The vehicle is switched on.
- The smartphone and the multimedia system each have internet reception.

Multimedia system:

- ▶ Select "RemoteTruck 3.0".
  - ◁ The QR code is generated and displayed in the multimedia system.
- ▶ Open the Mercedes-Benz Trucks Remote 3.0 App on the smartphone.
- ▶ Press the “Scan QR Code” button and follow the instructions.

Driver assistance/driving safety systems and your responsibility

Please bear in mind that the driver assistance/driving safety systems described here can only reduce the risk of accidents within system limits and the laws of physics.

Poor road and weather conditions as well as certain traffic situations can impair the function of driver assistance/driving safety systems.

Driver assistance/driving safety systems are only aids. They cannot replace your awareness of your surroundings and do not relieve you of your responsibility under road traffic laws.

Pay attention to the traffic conditions at all times and intervene when necessary.

Vehicles with fittings for front attachments (code C5O)

Front attachments, e.g. a temporarily fitted front mounting plate, can partially or entirely cover the sensors' detection range.

If the sensor detection ranges are partially or completely covered, deactivate the following driver assistance and driving safety systems manually:

- Active Brake Assist (→ Page 297)
- Proximity Control Assist (→ Page 284)
- Lane Keeping Assist (→ Page 309)
- Frontguard Assist (→ Page 291)
- Sideguard Assist/Active Sideguard Assist (→ Page 311)

Driving

Notes on preparing for a journey

Please note that all electronic safety systems in the vehicle merely serve to assist you. They do not relieve you of the obligation to carry out a visual check of the vehicle and the trailer/semitrailer before starting a journey.

Danger

Risk of injury from unsecured items in the vehicle

If objects, luggage, or loads are not secured or not secured sufficiently, they could slip, tip over, or be thrown around and thereby hit vehicle occupants.

There is a risk of injury, particularly in the event of braking manoeuvres or abrupt changes in direction!

- ► Always stow objects in such a way that they cannot be thrown around.
- ► Before the journey, secure objects, luggage, or loads against slipping or tipping over.

Danger

Risk of accident due to objects in the driver's footwell

Objects in the driver's footwell may impede pedal travel, or block a depressed pedal.

This compromises the operating and road safety of the vehicle.

- ► Stow all objects in the vehicle securely so that they cannot get into the driver's footwell.
- ► Always ensure that there is sufficient clearance for the pedals.
- ► Always install the floor mats securely and as specified.
- ► Do not use loose floor mats, and do not place floor mats on top of one another.

Danger

Danger of accident due to uneven loading

The driving characteristics, as well as steering and braking characteristics, may be greatly impaired.

- ► Load the vehicle evenly.
- ► Secure the load against sliding.

Preparing for a journey

Visual and functional inspection of the vehicle exterior

The following checks must be performed on the towing vehicle and on the trailer or semitrailer before starting a journey:

- ► Check the vehicle for leaks.
- ► Make sure that the licence plate number, vehicle lighting, turn signals, and brake lights are not dirty or damaged.

Note

The lamp check of the electronic key helps you check the vehicle lighting (→ Page 53).

- ► Check that the outline markings of all attachments and add-on equipment are in good condition.
- ► Check the wheels and tyres (→ Page 502).

When doing so, observe the following:

- General condition
- Visible damage and cracks
- Tyre pressure
- Tyre tread depth
- The wheels are fitted securely

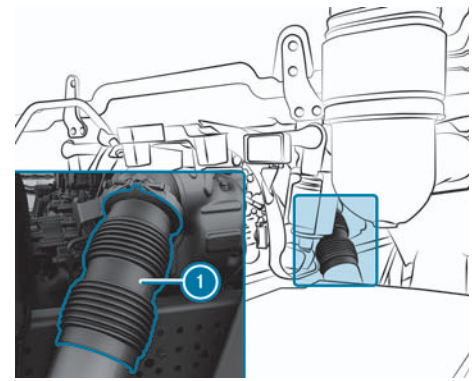

Decoupling element between the engine and the exhaust pipe (example)

- ► Check the decoupling element of the exhaust system (1) for visible damage, e.g. cracks.

Note

The decoupling element is a part subject to wear and must be checked regularly.

Vehicles with BlueTec® 4, 5, 6: The decoupling element must be replaced immediately if there is

damage and/or leaks. Traces of soot on the decoupling element signify leakage.

- ▶ Make sure that the vehicle is loaded correctly.
- ▶ Make sure that the dropside and exterior flaps are locked securely and not damaged.
- ▶ Fold/push in and lock the folding/extendable steps before driving.
- ▶ Move the folding underride guard to the on-road position.
- ▶ Fit and secure the mudguard centre part when operating the vehicle without a semitrailer.
- ▶ Fold down the mud flaps.
- ▶ In wintry conditions, remove accumulations of snow and ice from the towing vehicle and trailer/semitrailer (→ Page 396).
- ▶ Make sure that cables and compressed-air lines are connected properly (→ Page 376).
- ▶ Make sure that the fifth-wheel/trailer coupling is locked and secured correctly. Observe the separate operating instructions issued by the manufacturer for the operation, care, and maintenance of the fifth-wheel/trailer coupling. Have all faults and damage rectified. If necessary, have the causes determined and rectified at a qualified specialist workshop.

Check the emergency equipment/first-aid kit

Note

You will find an overview of emergency equipment and first-aid kits in the "Breakdown assistance" section (→ Page 451).

- ▶ Check the following emergency equipment to make sure that it is accessible, complete, and fully-functional.

- High visibility vest
- Warning triangle
- Warning beacon
- First-aid kit
- Fire extinguisher

- ▶ Check that the first-aid kit is usable at regular intervals. Note the use-by dates of the contents.
- ▶ Have the fire extinguisher checked every one to two years.
- ▶ The fire extinguisher must be refilled after each use.

When transporting emergency equipment, please observe the legal requirements of the country you are currently in.

Checking the vehicle illumination system

- ▶ Switch on the vehicle.
  - ◁ If a bulb on the towing vehicle is faulty, the instrument cluster shows the display messages [ ] and [ ] for the towing vehicle.
- ▶ Check the vehicle lighting, turn signal lamps, and brake lights on the towing vehicle and trailer/semitrailer with the help of a second person.

or

- Check the vehicle lighting using the vehicle key lamp check (→ Page 53).
- Replace the faulty bulbs (→ Page 116).

Checking levels of fuel and AdBlue®

- Check the fuel and AdBlue® level shown on the fuel display (→ Page 162) and on the AdBlue® display (→ Page 161).
- If necessary, refuel and top up with AdBlue® (→ Page 368).

Checking the engine oil level

- Check the engine oil level before the start of every journey.

Note
No information concerning the engine oil level will be displayed while you are driving.

Information on preparation for alcohol tester with immobiliser

The retrofit is prescribed as part of the General Safety Regulation and provides for a standardised interface in the cab, which is intended for the connection of a breathalyser from third-party providers.

By retrofitting an alcohol tester, companies can prevent the vehicle from being put into operation without a successful breathalyser test being completed.

Note
Country-specific regulations may prescribe or permit a bypass switch for the alcohol tester. This can be used in an emergency to start the vehicle without carrying out a breathalyser test.

Note
Further information on retrofitting an alcohol tester with immobiliser can be obtained from an authorised Mercedes-Benz Trucks Service Centre.

Note
Information on operating the alcohol tester has been specified in the vehicle's operating instructions.

Notes on the ignition lock

Danger
Risk of accident and injury due to children left unattended in the vehicle
If you leave children unattended in the vehicle, some of the things that might happen include:

- They may open doors, thereby endangering other persons or road users.
- They may get out and be struck by oncoming traffic.
- They may operate vehicle equipment and become trapped.

In addition, children could also set the vehicle in motion, for example, by

- Releasing the parking brake.

- Changing the transmission position.
- Starting the vehicle.

► Do not leave children unattended in the vehicle.
► When leaving the vehicle, always take the key with you and lock the vehicle.
► Keep the key out of the reach of children.

Danger

Risk of accident when the vehicle is switched off while driving

If during an emergency you switch off the vehicle while you are driving, safety-relevant functions will be restricted or no longer available.

This may affect the power steering system and the brake force boosting, for example.

You will then need to exert considerably more power when steering and braking, for example.

► For this reason alone, you should never switch off the vehicle while you are driving.

Danger

Risk of accident due to the key inadvertently turning in the ignition lock

If heavy or large objects are attached to the key, the key may inadvertently turn within the ignition lock.

► Do not attach large or heavy objects to the key.
► Remove the key from a bulky bunch of keys before inserting it into the ignition lock.

Key positions of the mechanical ignition lock

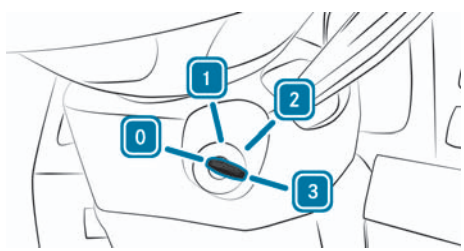

Ignition lock on the steering column

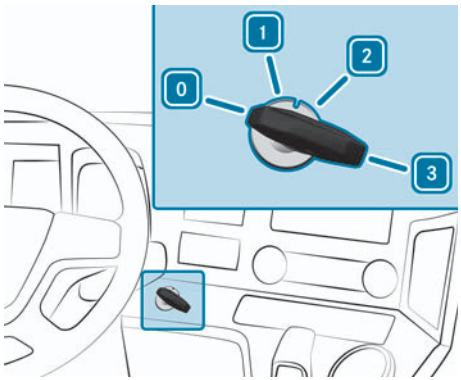

Ignition lock on the cockpit

Ignition lock

0	Insert/remove the vehicle key
1	Steering wheel unlocked/radio position
2	Vehicle switched on/drive position
3	Vehicle start/start position

Vehicles with the ignition lock on the steering column: When you remove the key in position 0, the steering is locked.

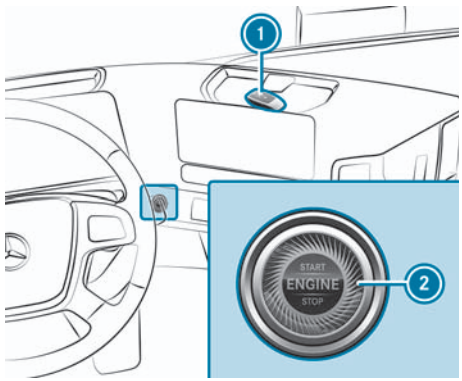

Electronic ignition lock (example)

Switch positions of the electronic ignition lock

Electronic ignition lock

1 Key

2 Start/stop button

The ignition lock has the following switch positions:

0	The vehicle is switched off.
1	Radio position – the power supply for some consumers is switched on.
2	Drive position – the vehicle is switched on.
3	Start position – the vehicle is started.

If you the press start/stop button 2 when the brake is not depressed, the ignition lock will switch to the next switch position. If you press the start/stop button in switch position 2, the ignition lock will switch to switch position 0.

If you press start/stop button 2 when the vehicle is stationary and has been started, the vehicle will switch off.

Radio position/power supply/drive position

Requirements

- The key is in the vehicle.
- The key battery is charged.

To switch the ignition lock to the radio position, press the 2 button once without depressing the brake pedal. In the radio position, the power supply is switched on for some consumers.

The power supply is switched off again when one of the following conditions is met:

- You open the driver's or co-driver's door.
- Press the 2 button twice.

To switch on the vehicle, press the 2 button twice. When the vehicle is switched on, the indicator lamps in the instrument cluster light up.

The vehicle is switched off again if one of the following conditions is met:

- You do not start the vehicle within 30 minutes.
- Press the 2 button once.

Note

If the vehicle is switched off automatically, vehicle lighting switched on by the automatic driving lights is also switched off.

If necessary, switch the vehicle illumination system on manually (→ Page 102).

Note

In an emergency, you can switch off the vehicle while driving. To do this, press the ② button for about three seconds or press the ② button three times within three seconds. Be sure to observe the safety instructions at the beginning of this chapter.

Ignition run-on

The ignition run-on function is only available in combination with an electronic ignition lock.

The ignition run-on function allows you to leave the vehicle switched on and take the key out of the vehicle with you. This means you can leave and lock the cab when the vehicle is switched on, for example. The ignition run-on function is limited to a maximum duration of 60 minutes. The ignition lock then switches to position 0 and the vehicle switches off.

Engine run-on

Danger

Risk of accident due to the vehicle roll-starting unintentionally

If you use the engine run-on function, the vehicle may roll-start unintentionally if crawler mode is activated and the start-off gear is engaged.

- Shift the transmission to neutral.
- Apply the parking brake.

The engine run-on function is only available in combination with an electronic ignition lock.

The engine run-on function allows you to leave the engine running while the vehicle is stationary and take the key out of the vehicle with you. This means you can lock the cab and operate power take-offs or use the level control system in work mode, for example.

Automatic engine start/stop for refrigerated vehicles (code E4E)

For refrigerated truck bodies which are powered by the engine, the vehicle can be automatically started and stopped by the body electronics. This is the case regardless of whether or not the cab is locked. This function ensures that the desired temperature is maintained when the vehicle is stationary.

If the vehicle is started by the body electronics, the transmission remains blocked. This means that the vehicle continues to be protected against theft.

Start the vehicle

Danger

Risk of fatal injuries due to exhaust gases

Combustion engines emit poisonous exhaust gases, such as carbon monoxide. Breathing in these exhaust gases is hazardous to health and results in poisoning.

- Do not leave the engine and, if installed, the auxiliary heating, running in an enclosed space without sufficient ventilation.

- Press and hold the brake or apply the parking brake.
- Switch on the vehicle.
  - ◁ The display check of the instrument cluster starts.
- Check the engine oil level (→ Page 169).
- Shift the transmission to neutral.
- Deactivate the power take-off (→ Page 404).
- Switch off the cargo liftgate, see the separate operating instructions.
- Vehicles with engine preheating: In outside temperatures below -20 °C, preheat the engine before starting (→ Page 153).
- Press and hold the start/stop button or turn the key to the start position in the ignition lock. Do not depress the accelerator pedal while doing so.

Note

The idle speed is increased at very low outside temperatures or during diesel particulate filter regeneration.

Note

On vehicles with engines OM 470 and OM 471, an increased operating noise occurs when the engine is cold and during manual regeneration of the diesel particulate filter.

Note

Depending on the equipment, the starting procedure is automatically interrupted for the following vehicles:

For vehicles with the OM 936 engine, after approx. 60 seconds.

For vehicles with OM 470, OM 471 and OM 473 engines, after approx. 40 seconds.

For vehicles with the OM 460 engine, the starting procedure must be interrupted after 20 seconds and repeated after approximately one minute.

After three starting procedures, take a break of about three minutes.

Vehicles with an electronic ignition lock: If the vehicle does not start and the Hold key to contact point as shown in Owner's Manual display message is displayed in the instrument cluster, the vehicle can be started in emergency mode.

Start the vehicle in emergency operation mode

- Hold the vehicle key to the right next to the Start/Stop button and press the Start/Stop button.
- If the vehicle starts up: Have the vehicle key checked at a qualified workshop.
- If the vehicle does not start: Consult a qualified specialist workshop.

Notes on automatic engine speed increase

Danger

Risk of fire from hot exhaust system components

Flammable materials, such as leaves, grass or twigs, may ignite.

- ▶ Park the vehicle such that no flammable materials can come into contact with hot vehicle parts.
- ▶ In particular, do not park on dry grassland or harvested grain fields.

Note

Damage due to hot exhaust gases

During the automatic engine speed increase, very hot exhaust gases escape from the exhaust tailpipe.

- ▶ Keep a minimum distance of one metre away from other objects, such as parked vehicles.

In order to reduce deposits of unburned hydrocarbon (fuel) in the catalytic converter of the exhaust system, a sufficiently high operating temperature is necessary. If the operating temperature e.g. at very low outside temperatures for a longer period of time, the engine speed is increased automatically. This leads to increased operating noises.

The automatic engine speed increase starts when the following conditions are met:

- The vehicle is switched off with the engine running and the parking brake applied.
- The operating temperature of the catalytic converter was not reached within approximately five hours.

If you release the parking brake or engage a gear, the process is cancelled.

BlueTec® 6 vehicles:

If the display message Rotational speed increase appears in the instrument cluster, the process is started.

This is performed at increased engine speeds.

The display message disappears after approximately 30 minutes.

The automatic increase in engine speed does not regenerate the diesel particulate filter.

BlueTec® 5 vehicles (with code M5S)

If the display message Rotational speed increase appears in the instrument cluster, the process is started.

The engine speed is increased to approximately 1400 1/min for a maximum of 60 minutes and the engine also works against the engine brake.

When the operating temperature of the catalytic converter has been reached and the process is complete, the display message disappears and the engine runs at idle speed again.

If the operating temperature of the catalytic converter has not been reached after 60 minutes, the display message disappears and the process restarts after a break of approximately four hours.

Notes on automatic engine speed increase at low on-board electrical system voltage

If the energy requirement from the on-board electrical system is increased at a low engine speed (idle speed), the engine speed may increase automatically. This increases the alternator output and ensures operation of the required electrical consumers.

Safety checks

Checking the supply pressure in the compressed-air brake system

Danger

Risk of accident due to leaking compressed-air brake system

If a compressed-air brake system is leaking or there is insufficient reserve pressure, it will not be possible to brake the vehicle.

- Only set the vehicle in motion if the necessary reserve pressures are reached.
- In case of a loss of pressure while driving, immediately stop the vehicle safely. Pay attention to the traffic conditions.
- Consult a qualified specialist workshop as soon as possible.

- Check the compressed-air brake system for leaks (→ Page 234).
- Start the vehicle and wait until the warning lamp in the instrument cluster goes out.
- In the instrument cluster, open the Reservoir pressure menu window and check the current supply pressure.
- Observe the display messages and the indicator lamps in the status area of the instrument cluster for the supply pressure and the compressed-air brake system.

Checking supply pressure in the transmission/clutch circuit

Danger

Risk of accident due to low supply pressure

In the event of pressure loss or if the supply pressure in the transmission/coupling circuit is too low, you will no longer be able to shift gear.

- Do not set the vehicle in motion or stop the vehicle as soon as possible, paying attention to surrounding road and traffic conditions. Pay attention to the traffic conditions.
- Use the parking brake to secure the vehicle against rolling away.
- Consult a qualified workshop immediately to have the compressed-air system repaired.

The supply pressure in the transmission/clutch circuit is only replenished after brake circuits 1 and 2. If the supply pressure in the transmission/clutch circuit is too low, the instrument cluster

shows the display message Transmission/clutch reserve pressure too low.

- Start the vehicle and wait until the display message disappears.

Check the function of the compressed-air dryer

Danger

Risk of accident due to an excessively high condensation level

If the condensation level in the compressed-air reservoirs is too high, the braking effect may be reduced, or the compressed-air brake system may fail.

- Check the compressed-air system for condensation before starting a journey.
- If the compressed-air brake system has an excessively high condensation level, have it checked at a qualified specialist workshop as soon as possible.

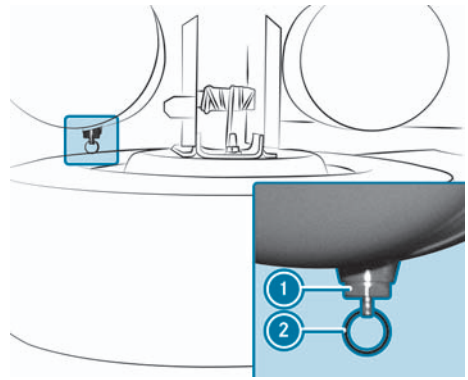

Drain valve on the compressed-air reservoir

- Start the vehicle.
- Check the reservoir pressure in the compressed-air brake system (→ Page 229).
- If the instrument cluster shows the red display message Brake reservoir pressure in circuit 1 too low and/or Brake reservoir pressure in circuit 2 too low: Leave the vehicle switched on until the red display messages disappear.
  - ◁ The compressed-air system is filled.
- Switch off the vehicle.
- Press the ring ② on the drain valve ① upwards and drain the condensate.
- If a large amount of condensation runs out, have the compressed-air brake system checked at a qualified specialist workshop.

Vehicles with condensation monitoring:

If it is detected that too few regeneration phases have been conducted, the instrument cluster will show the display message Condensation in compressed-air reservoir.

Check the vehicle height

Danger

Risk of accident due to lowered or raised chassis

The braking and handling characteristics may be greatly impaired. The permitted vehicle height may be exceeded.

- Set the driving level before you set off.

If the yellow indicator lamp lights up in the instrument cluster, this means the chassis is not at driving level.

- Set driving level (→ Page 334).
  - ◁ The indicator lamp in the instrument cluster goes out.

Notes on pulling away

Note

Engine damage due to low oil pressure

The engine needs a short time to build up the necessary oil pressure after starting, especially if it is cold. There is a risk of increased wear and engine damage if the oil pressure is insufficient.

- Before driving off or increasing the engine speed, let the engine run in neutral for a short time.
- Avoid high engine speeds if the engine is cold.

Note

Damage to the power steering due to overload

If, for example, the wheels are touching a kerb, holding the steering at the stop for too long or turning the steering wheel too forcefully could cause the steering to be damaged or malfunction.

- Do not hold the steering wheel in the fully turned position for longer than ten seconds.
- Do not steer too forcefully if the wheels are close to objects.

Vehicles with automated manual transmission and without turbo retarder clutch: The vehicle has a selectable crawler mode. When crawler mode is activated, the vehicle automatically crawls forwards after the service brake has been released, and continues to roll at idle speed. You can find information on crawler mode in the "Automated manual transmission" section (→ Page 250).

- Vehicles with turbo retarder clutch: Observe the information on pulling away in the "Turbo retarder clutch" section (→ Page 263).
- If the drive wheels spin when pulling away, switch on the starting-off aid (→ Page 341).
- Test the brakes when moving off. Pay attention to the traffic situation.
- If you notice a reduction in braking power when testing the brakes, stop the vehicle as soon as possible while paying attention to traffic conditions. Have the braking system checked and repaired by a qualified specialist workshop.

Notes on stopping and switching off the engine

Danger

Risk of fire from hot exhaust system components

Flammable materials, such as leaves, grass or twigs, may ignite.

- ► Park the vehicle such that no flammable materials can come into contact with hot vehicle parts.
- ► In particular, do not park on dry grassland or harvested grain fields.

Danger

Risk of accident on uphill or downhill slopes

The parking brake may not be sufficient to secure the vehicle on uphill and downhill slopes.

A loaded vehicle or a vehicle with a trailer/semitrailer may roll away.

- ► In the check position, check whether the braking force of the parking brake alone is sufficient to hold the complete vehicle.
- ► Generally, secure the towing vehicle and trailer/semitrailer with the parking brake and, additionally, with chocks.

Danger

Risk of accident when the vehicle is switched off while driving

If during an emergency you switch off the vehicle while you are driving, safety-relevant functions will be restricted or no longer available.

This may affect the power steering system and the brake force boosting, for example.

You will then need to exert considerably more power when steering and braking, for example.

- ► For this reason alone, you should never switch off the vehicle while you are driving.

Danger

Risk of accident and injury due to children left unattended in the vehicle

If you leave children unattended in the vehicle, some of the things that might happen include:

- They may open doors, thereby endangering other persons or road users.
- They may get out and be struck by oncoming traffic.
- They may operate vehicle equipment and become trapped.

In addition, children could also set the vehicle in motion, for example, by

- Releasing the parking brake.
- Changing the transmission position.
- Starting the vehicle.

- ► Do not leave children unattended in the vehicle.
- ► When leaving the vehicle, always take the key with you and lock the vehicle.
- ► Keep the key out of the reach of children.

If children are being transported in the vehicle, please observe the additional notes/instructions (→ Page 46).

You can find information on crawler mode in the "Automated manual transmission" section (→ Page 253).

Vehicles with automated manual transmission:

After the vehicle has been halted with crawler mode activated, the vehicle begins to crawl again in the following cases:

- The transmission is not shifted to neutral.
- The parking brake is not applied.
- The service brake is released again.

In the following situations, leave the stationary vehicle switched on for approximately two additional minutes before switching it off:

- The vehicle has been driven for a prolonged period with the turbo retarder clutch in operation.
- The vehicle has been driven for a prolonged period in retarder mode.
- The coolant temperature is above approximately 100 °C.
- Full engine output has been used, e.g. while driving in mountainous terrain or during combined operation.

Stopping and switching off the engine

Stopping when crawler mode is activated

To prevent the vehicle from roll-starting when crawler mode is activated, observe the following:

- ► Stop the vehicle.
- ► Apply the parking brake.
- ► Shift the transmission to neutral.

Switching off the vehicle

- ► Turn the key back in the ignition lock as far as it will go.

or

- ► Press and release the start/stop button.
- ► Secure the vehicle against rolling away; use chocks if necessary.

Brakes

Notes on the brake system

Always observe the notes in the yellow or red display messages (→ Page 541) shown in the instrument cluster when there is a malfunction in the brake system. In addition, an indicator lamp lights up in the status area of the instrument cluster and a warning tone may sound. Have the brake system checked and repaired at a qualified specialist workshop.

The vehicle is equipped with an electronic braking system (EBS) when it leaves the factory and can include the following functions:

- ABS (anti-lock braking system)
- ASR (acceleration skid control system)
- ALB (automatic load-dependent brake)
- Hill holder
- BAS (Brake Assist System)

Checking the compressed-air brake system for leaks

Danger

Risk of accident due to leaking compressed-air brake system

If a compressed-air brake system is leaking or there is insufficient reserve pressure, it will not be possible to brake the vehicle.

- Only set the vehicle in motion if the necessary reserve pressures are reached.
- In case of a loss of pressure while driving, immediately stop the vehicle safely. Pay attention to the traffic conditions.
- Consult a qualified specialist workshop as soon as possible.

Note

Do not let anyone enter or exit the vehicle during the test. This avoids mistaking pressure loss from the air-sprung cab suspension system, air-sprung seats or the level control system for a leak.

- Stop the vehicle on a level surface.
- Apply the parking brake.
- Use chocks to prevent the vehicle from rolling away.
- Release the parking brake.
- Switch on the vehicle.
- In the instrument cluster, open the Reservoir pressure menu window.
- Start the vehicle and wait until the display shows a supply pressure of at least 11 bar.
- Switch off the vehicle.
  - ◁ The parking brake is automatically applied.
- Switch on the vehicle.
- Release the parking brake again.
- In the instrument cluster, open the Reservoir pressure menu window again.
- Depress the brake pedal and keep it in this position.
- After a brief moment, read off the supply pressure.
- Read off the supply pressure once again after approximately one minute.

If no significant loss of pressure is detected in the menu window Reservoir pressure after that minute, the compressed-air brake system is not leaking.

If a significant loss of pressure is detected, the compressed-air brake system is leaking.

- If the compressed-air brake system is leaking, have it checked and repaired at a qualified workshop.

Notes on the trailer/semitrailer brake system

The indicator lamp for the trailer/semitrailer brake system can light up in

two different colours in the instrument cluster.

If the indicator lamp lights up in the status area of the instrument cluster, observe the following information:

- The trailer's/semitrailer's brake system is malfunctioning.
- Driving/braking behaviour may change.
- Also observe the notes in the separate operating instructions provided by the trailer/semitrailer manufacturer.
- Deactivate driver assistance systems that intervene actively in the brake depending on the driving situation, as the overall braking behaviour of your vehicle can be significantly altered on slippery surfaces due to the existing fault.
- Continue your journey carefully.
- Have the brake system checked at a qualified specialist workshop as soon as possible.

If the indicator lamp lights up in the status area of the instrument cluster, observe the following information:

- The trailer's/semitrailer's brake system has a fault or the trailer/semitrailer is automatically braked.
- Driving/braking behaviour may change.
- Also observe the notes in the separate operating instructions provided by the trailer/semitrailer manufacturer.
- Brake carefully and stop the vehicle, paying attention to road and traffic conditions.
- Apply the parking brake.
- Notify a qualified specialist workshop.

ABS (anti-lock braking system)

Function of ABS

ABS controls the brake pressure so that the wheels do not lock when braking. This means that the vehicle can still be steered while braking.

ABS display check

Danger

Risk of skidding when ABS malfunctions

If ABS malfunctions, the wheels may lock during braking.

- ▶ Continue your journey carefully.
- ▶ Have the ABS checked at a qualified specialist workshop as soon as possible.

The anti-lock protection function is not guaranteed in the following situations:

- After switching on the vehicle, the indicator lamp is not displayed in the status area of the instrument cluster.
- The vehicle has been switched on for three seconds and the indicator lamp is still lit.
- The indicator lamp lights up after the vehicle has pulled away.

Braking with anti-lock protection

Danger

Risk of accident due to brakes locking

When braking, the wheels of the trailer/semitrailer may lock and the tractor/trailer combination may become unstable if:

- the trailer/semitrailer does not have any ABS
- the trailer/semitrailer ABS has failed
- ABS has failed completely

As a result, you could lose control of the tractor/trailer combination and cause an accident.

- ► Always adapt your driving style to the prevailing road and weather conditions, and maintain a sufficient, safe distance from other road users.
- ► Avoid maximum full-stop braking, apart from in an emergency situation.
- ► As you consider your driving style, always keep in mind that active driver assistance systems can unexpectedly intervene at any time to assist with braking.

Note

Even if Stability Control Assist is activated, the wheels of the trailer or semitrailer can still lock when braking.

- ► **If ABS intervenes:** Continue to depress the brake pedal until the braking situation has passed.
  - ◁ When ABS is intervening, the continuous brake is switched off. The indicator lamp [ ] in the instrument cluster remains on.
- ► **If emergency braking is engaged:** Vigorously depress the brake pedal.
  - ◁ Under certain conditions, the hazard warning light system switches on automatically.

If you want to drive the towing vehicle with a trailer or semitrailer with ABS or an electronic brake system:

- ► Connect the connecting cable to the ABS/BS socket or the ABS plug (→ Page 377).

If you want to drive the towing vehicle without a semitrailer or with a semitrailer without ABS:

- ► Insert the connecting cable into the empty socket.

Function of BAS (Brake Assist System)

Danger

Risk of an accident caused by a malfunction in BAS (Brake Assist System)

If BAS malfunctions, the braking distance may be longer in emergency braking situations.

- ► Depress the brake pedal with full force in emergency braking situations. ABS will prevent the wheels from locking.

BAS supports you in emergency braking situations. If you depress the brake pedal

quickly, BAS boosts the brake pressure and thus shortens the braking distance.

► Keep the brake pedal firmly depressed until the emergency braking situation has passed.

The brakes will function as usual once you release the brake pedal. BAS is deactivated.

Electronic parking brake

Notes on the electronic parking brake

Danger

Risk of accident and injury due to children left unattended in the vehicle

If you leave children unattended in the vehicle, some of the things that might happen include:

- They may open doors, thereby endangering other persons or road users.
- They may get out and be struck by oncoming traffic.
- They may operate vehicle equipment and become trapped.

In addition, children could also set the vehicle in motion, for example, by

- Releasing the parking brake.
- Changing the transmission position.
- Starting the vehicle.

► Do not leave children unattended in the vehicle.

► When leaving the vehicle, always take the key with you and lock the vehicle.

► Keep the key out of the reach of children.

Danger

Risk of accident on uphill or downhill slopes

The parking brake may not be sufficient to secure the vehicle on uphill and downhill slopes.

A loaded vehicle or a vehicle with a trailer/semitrailer may roll away.

► In the check position, check whether the braking force of the parking brake alone is sufficient to hold the complete vehicle.

► Generally, secure the towing vehicle and trailer/semitrailer with the parking brake and, additionally, with chocks.

Danger

Risk of skidding and accident due to secondary braking with the parking brake

If you brake the vehicle using the parking brake, no ABS braking regulation takes place. The wheels could lock. There is an increased risk of skidding and/or accident.

► Do not pull the parking brake lever past the resistance point.

► If the wheels lock, as soon as possible move the parking brake lever in the release direction to the point at which the wheels begin to turn again.

Using the electronic parking brake

Exemplary representation

Electronic parking brake

1. Lever [Ⓟ] for electronic parking brake
2. Button [Ⓟ] for electronic parking brake

Note

If the vehicle is equipped with Trailer Stability Assist (TSA), the button [Ⓟ] is next to the button [TSA] for this function (→ Page 329).

Depending on equipment, a lever version with an electrically-driven independent trailer brake is possible.

If the symbol [ ] appears on the lever (1):

► Observe the notes in the section on the electrically-driven independent trailer brake (→ Page 240).

Applying the electronic parking brake manually

Requirements:

- The vehicle is stationary.

► Press the button [Ⓟ].

or

► Pull the lever (1) past the pressure point.

◁ The parking brake is applied.

◁ The indicator lamp of the [Ⓟ] button and the [Ⓟ] indicator lamp on the instrument cluster light up continuously.

Note

Only once the indicator lamp in the [Ⓟ] button and the indicator lamp on the instrument cluster [Ⓟ] light up does this indicate that the parking brake has been engaged correctly.

Releasing the electronic parking brake manually

Requirements:

- The vehicle is switched on.
- The pressure in brake circuits 1 and 2 is adequate.

► Depress the brake pedal.

► Press the button [Ⓟ].

◁ The parking brake is released.

◁ The indicator lamp in the [Ⓟ] button and the [Ⓟ] indicator lamp on the instrument cluster go off.

Applying the electronic parking brake automatically

Requirements:

- The vehicle is stationary.
- The vehicle is switched on.

► Switch off the vehicle.

or

► Open the driver's door.
  - ◁ The parking brake is automatically applied.
  - ◁ The indicator lamp of the (P) button and the (P) indicator lamp on the instrument cluster light up continuously.

Releasing of the electronic parking brake automatically

Requirements:

- The vehicle is switched on.
- The pressure in brake circuits 1 and 2 is adequate.
- The doors are closed.

► Shift transmission from N to D or R.
  - ◁ The HOLD function of the electronic brake system is activated.
  - ◁ The HOLD indicator lamp is displayed in the instrument cluster.
  - ◁ The vehicle is held by the service brake.
  - ◁ The parking brake is released.

► Depress the accelerator pedal.
  - ◁ The HOLD function of the electronic brake system is deactivated.
  - ◁ The vehicle starts moving.
  - ◁ The HOLD indicator lamp in the instrument cluster goes out.

Testing the parking brake (check position)

Requirements:

- The pressure in brake circuits 1 and 2 is adequate.
- The parking brake is applied.
- The (1) lever is in the starting position.

► Pull the (1) lever past the pressure point and hold it there.
  - ◁ The check position of the parking brake is activated.
  - ◁ The Performing check position display message appears in the instrument cluster.

Note

During the test, the tractor/trailer combination is only held by the force exerted by the spring-loaded brake of the towing vehicle. The trailer or semitrailer brake is released.

Secondary braking with electronic parking brake

Requirements:

- The parking brake is released.

► Depending on the desired strength of the auxiliary braking, pull the (1) lever no further than the pressure point.
  - ◁ The parking brake brakes the vehicle depending on the lever position.
  - ◁ If the pressure in the spring-loaded actuator is less than

6.5 bar, the (P) indicator lamp lights up in the instrument cluster.

Activating the workshop mode of the electronic parking brake

Requirements:

- The vehicle is stationary.
- The parking brake is applied.
- Vehicle is switched off.

If you activate workshop mode of the electronic parking brake, all automatic parking brake functions are deactivated.

To avoid automatic application of the electronic parking brake when the vehicle is being towed, activate workshop mode and tow the vehicle with the front axle raised.

► Switch on the vehicle, but do not start it.
► Press and hold the (P) button.
► Switch off the vehicle.
◁ Workshop mode of the electronic parking brake is activated.
◁ The instrument cluster shows a corresponding display message after the vehicle is switched on again.

If you drive faster than 30 km/h while workshop mode is activated, this mode will deactivate.

Electric independent trailer brake

Notes on the electric anti-jackknife brake

The anti-jackknife brake can be used independently of the service brake and parking brake of the towing vehicle. The anti-jackknife brake brakes the wheels on the trailer/semitrailer and, depending on the configuration, the towing vehicle. Pull the anti-jackknife brake lever to perform braking adjustments on downhill gradients. This prevents the tractor/trailer combination from jack-knifing.

► If the anti-jackknife brake is not sufficient, reduce speed using the service brake or the retarder.

Danger

Risk of accident due to incorrect use of the anti-jackknife brake

If you use the anti-jackknife brake improperly, e.g. as a replacement for the continuous brake, the trailer/semitrailer brake can overheat or lock. This means that the vehicle is no longer safe for operation or road use.

► Only use the anti-jackknife brake briefly for adaptive braking.

Electric anti-jackknife brake lever

Note

Depending on configuration, a lever variant of the electronic parking brake with auxiliary brake function is available. In this case, the symbol (1) is shown on the [(P)] lever. Read the information in the section on the electronic parking brake (→ Page 237).

Applying and releasing the holding brake on the front axle

Danger

Risk of accident due to limited brake force of the holding brake on the front axle

The holding brake is not a parking brake. The brake force at the front axle is available for a limited period only and only when the vehicle has been started. The vehicle may roll away.

- Additionally secure the vehicle with chocks.

Applying the holding brake

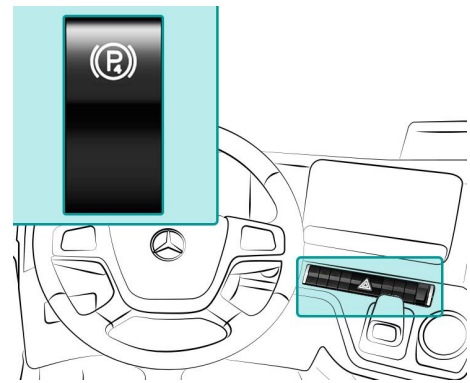
Switch for holding brake on the front axle (example)

The holding brake on the front axle provides a safe support, e.g. for fire engines when carrying out rescue operations using the winch. The holding brake at the front axle can exclusively be activated when the parking brake is applied.

- Start the vehicle.
- Shift the transmission to neutral.
- Apply the parking brake.

Note

The supply pressure in brake circuit 2 must be above 7.5 bar.

- Press the Ⓟ switch at top.
  - ◁ The indicator lamp in the Ⓟ switch lights up.

Note

If you switch off the vehicle when the holding brake is switched on or the parking brake is released, the holding brake on the front axle is automatically released.

Releasing the holding brake

- Press the Ⓟ switch at the bottom.
  - ◁ The holding brake on the front axle is released. The parking brake remains applied. The indicator lamp in Ⓟ switch goes off.

Frequent-stop brake

Notes on the frequent-stop brake

Danger

Risk of accident due to excessively low brake pressure of the frequent-stop brake

If you use the frequent-stop brake to secure the vehicle to prevent it from rolling away, the brake pressure may be too low.

This may cause the vehicle to roll away even though the frequent-stop brake is applied.

- Never exit the driver's seat when the frequent-stop brake is applied, and be ready to brake.
- If the vehicle rolls away, also apply the service brake.

Danger

Risk of accident due to the frequent-stop brake being applied in winter

If, in wintry road conditions, you brake with the frequent-stop brake applied, the wheels may lock just before the vehicle stops. Even if you remove your foot from the brake pedal, the wheels will remain locked.

This may cause the vehicle to skid or slide away, e.g. on uphill or downhill slopes.

- Never apply the frequent-stop brake in wintry road conditions.

Danger

Risk of accident due to the frequent-stop brake not being applied

If you do not stop the vehicle with the service brake, e.g. when coasting down, the frequent-stop brake will not be applied. The vehicle may roll away.

- In order to apply the frequent-stop brake, always use the service brake to brake the vehicle to a standstill.

The frequent-stop brake uses less compressed air than the parking brake. Use the frequent-stop brake if you frequently pull away and stop for short periods of time, e.g. in refuse collection operation. The frequent-stop brake does not replace the service brake or the parking brake. You will find further information on stopping in the "Pulling away and stopping" section (→ Page 233).

When the frequent-stop brake is released, the [ ] indicator lamp in the status area goes out.

If you switch the vehicle off while the frequent-stop brake is applied, the frequent-stop brake will remain applied.

Vehicles with automated manual transmission: When you engage the frequent-stop brake, crawler mode is deactivated automatically. You can find information on crawler mode in the "Automated manual transmission" section (→ Page 253).

Applying and releasing the frequent-stop brake

Deactivating

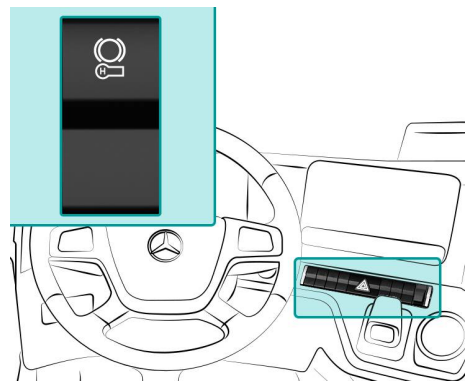

Example: frequent-stop brake switch

- Press the [ ] switch at top.
  - ◁ The indicator lamp [ ] in the instrument cluster lights up.

Deactivation

- Press the [ ] switch at the bottom.
  - ◁ The indicator lamp [ ] in the instrument cluster goes out.

Using the hill holder

Danger

Risk of accident due to the hill holder being activated in winter

If you brake in wintry road conditions with the hill holder switched on, the wheels may lock shortly before stopping. Even if you remove your foot from the brake pedal, the wheels will remain locked. This may cause the vehicle to skid or slide away, e.g. on uphill or downhill slopes.

- Do not activate the hill holder in wintry road conditions.

Danger

Risk of accident due to the hill holder not being activated

If you do not stop the vehicle with the service brake, e.g. when coasting down, the hill holder will not activate. The vehicle may roll away.

- In order activate the hill holder, always use the service brake to brake the vehicle to a standstill.

The hill holder assists you when pulling away on uphill or downhill slopes. The hill holder prevents the vehicle from rolling. This facilitates controlled pulling away.

- In menu Functions, menu item Switch of the multimedia system, press button [ ].

If the hill holder is activated and you depress the brake pedal when the vehicle is stationary, the indicator lamp [ ] lights up in the instrument cluster. If you release the brake pedal, the vehicle is held for two seconds to facilitate controlled pulling away.

Note

One second before the brake is released by the hill holder, a warning tone sounds.

Vehicles with manual transmission: If you do not depress the accelerator, clutch or brake pedal when the vehicle is stationary and the hill holder is active, a warning tone sounds. The hill holder is released and the [ ] indicator lamp in the instrument cluster goes out. When you brake the vehicle to a standstill while the hill holder is activated, the hill holder is active and the [ ] indicator lamp in the instrument cluster lights up. If you then apply the parking brake, the hill holder is deactivated and the [ ] indicator lamp in the instrument cluster goes out. The vehicle is then held by the parking brake. After the parking brake is released, the hill holder is no longer active. If you depress the brake pedal, the hill holder remains active after the parking brake is released. If you depress the accelerator pedal and the vehicle pulls away, the hill holder is released automatically. The indicator lamp [ ] in the instrument cluster goes out.

The hill holder must be re-engaged after the vehicle has been switched on again.

Vehicles with automated manual transmission: If crawler mode is active, the hill holder is automatically released when the vehicle begins to creep forward after the service brake has been released. When crawler mode reaches its functional limits, it is automatically cancelled. The instrument cluster shows the display message Creeping mode cancelled.
A warning tone will sound and the transmission control will disengage the clutch. In this case, depress the brake pedal to bring the vehicle to a halt or depress the accelerator pedal to move off again.

If you do not depress the brake pedal while the vehicle is stationary and the hill holder is activated, a warning tone sounds. The hill holder is deactivated and the indicator lamp [ ] on the instrument cluster goes out.

Using the HOLD function

The HOLD function holds the vehicle in place without requiring you to continue applying the brakes, for example, when pulling away on a hillside or during periods spent in stationary traffic.

- Do not use the HOLD function when off-road, on steep downhill or uphill slopes, or with slippery or loose sur-

faces. Under these conditions, the HOLD function may not be able to hold the vehicle.

The HOLD function is only an aid. The driver is always responsible for safeguarding the vehicle against unintentional rolling away.

Danger

Risk of accident due to the HOLD function being activated when leaving the vehicle

If the vehicle is only braked by the HOLD function, it may roll away in the event of a malfunction in the system or in the power supply. The vehicle can also roll away if the HOLD function is switched off due to the accelerator pedal being depressed, e.g. by a vehicle occupant.

- Before exiting it, switch off the vehicle and use the parking brake to secure it against rolling away.

- **To activate the HOLD function:** Depress the brake pedal and, after a brief moment, quickly continue to depress it.
  - ◁ The HOLD display lights up in the instrument cluster.
- Release the brake pedal.

Note

If, instead of the HOLD indicator lamp, the indicator lamp of the hill holder is shown in the instrument cluster, refer to the notes under "Hill holder" (→ Page 243).

The HOLD function is not activated if the vehicle has been braked to a standstill by the distance control assistant.

The HOLD function will deactivate and the HOLD indicator lamp will go out in the following circumstances:

- You depress the accelerator pedal with both the clutch and a gear engaged.
- The electronic parking brake is applied.
- The vehicle is switched off.
- A system error occurs.
- The power supply is too low.

Note

Vehicles with automated manual transmission: After the HOLD function is deactivated, the activated crawler mode will not cause automatic creeping (→ Page 253).

Continuous brake

Notes on the continuous brake

Danger

Risk of accident and skidding when driving on a slippery carriageway

If you activate the retarder or shift down a gear on a slippery carriageway in order to increase the engine's braking effect, the drive wheels may lose their grip.

- To increase the braking effect of the engine, never activate the retarder and avoid shifting down to a lower gear when driving on a slippery carriageway.

Danger

Risk of skidding and accident due to malfunction of the retarder or retarder controller

If the retarder or retarder controller malfunctions, the handling and braking characteristics of the vehicle may change.

The vehicle may brake in an uncontrolled manner.

The wheels may lock and therefore lose their grip.

The vehicle may skid.

Vehicle acceleration while overtaking may be lower than desired.

Overtaking may take longer and may need to be aborted.

- ► Drive particularly carefully or stop promptly in accordance with traffic regulations.
- ► Have the retarder or retarder controller checked immediately at a qualified specialist workshop and repaired if necessary.

- ► Always observe the warning lamps and display messages and take the actions described.

You can make optimal use of the engine's braking effect, particularly on long downhill slopes, if you observe the following points:

- Activate the continuous brake.
- Shift to a lower gear in good time.

Engine brake

- ► Observe the effective engine braking range marked on the rev counter (→ Page 160).

At very low outside temperatures, the engine brake has limited or no effect after the vehicle has been started.

Retarder

If the [ ] indicator lamp flashes in the instrument cluster, the retarder's braking power is reduced.

- ► Shift to a lower gear in good time to increase the engine braking effect and engine cooling capacity.

Activate/deactivate the continuous brake

If the retarder is deactivated and the indicator lamp [ ] in the instrument cluster does not go out, the retarder is damaged.

- ► Have the continuous brake checked at a qualified specialist workshop.

Example: multifunction lever

BlueTec® vehicles without a retarder are equipped with three brake stages (1 – 3) and vehicles without BlueTec® exhaust gas aftertreatment have two brake stages (1 – 2).

If the vehicle is switched on and the indicator lamp flashes in the instrument cluster, the multifunction lever is not in position 0.

- **To switch on:** Pull the multifunction lever to the desired brake stage.
  - ◁ The check lamp in the instrument cluster lights up.
- **Switching off:** Push the multifunction lever to position 0.
  - ◁ The indicator lamp in the instrument cluster goes out.

Manual transmission

Notes on the manual transmission

Danger

Risk of accident due to low supply pressure

In the event of pressure loss or if the supply pressure in the transmission/coupling circuit is too low, you will no longer be able to shift gear.

- Do not set the vehicle in motion or stop the vehicle as soon as possible, paying attention to surrounding road and traffic conditions. Pay attention to the traffic conditions.
- Use the parking brake to secure the vehicle against rolling away.
- Consult a qualified workshop immediately to have the compressed-air system repaired.

Note

Damage to the transmission, engine or clutch by selecting reverse gear

Observe the following notes:

- Do not drive at too low or too high an engine speed.
- Only engage reverse gear when the engine is at idling speed and the vehicle is stationary.
- During shift operations, make sure that the engine speed does not rise into the red danger zone of the rev counter.
- Release the gearshift lever once the shift operation is over. Do not rest your hand or arm on the gearshift lever.
- The maximum permissible engine speed has been exceeded if the warning tone sounds when downshifting. Do not shift to the lower gear, but rather into a higher gear. Power-assisted gearshifts are switched off to protect the transmission synchronisation. For this reason, more effort is needed for shifting.

Changing gear

Changing gear

The engine only accepts throttle with a delay in the following cases:

- if the vehicle is stationary.
- if the transmission is in neutral position.

To support the most fuel-efficient driving style possible, the instrument cluster displays a gearshift recommendation in the form of an arrow. Shift the gears up ↑ or down ↓ according to the recommended gear.

- Depress the clutch pedal.
- Change the shift range if necessary (→ Page 249).
- Shift into the desired gear with the gearshift lever, without using excessive force.
- **Engaging reverse gear** Engaging reverse gear: overcome the gearshift lever pressure point in the reverse-gear gate by gently tapping the side of the gearshift lever with your hand.

Function of the 9-speed transmission

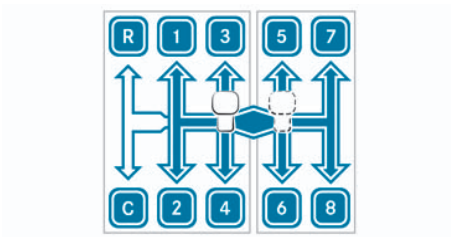

The 9-speed transmission is a manually operated transmission. The transmission is equipped with a double-H gearshift.

In neutral, the gearshift lever is in the shift gate between 3rd and 4th gear or 5th and 6th gear.

The transmission is divided into the following shift ranges:

- Low shift range L with the following gears:
  - gears 1 to 4
  - crawler gear C
  - reverse gear R
- high shift range H with gears 5 to 8

Function of the 16-speed transmission

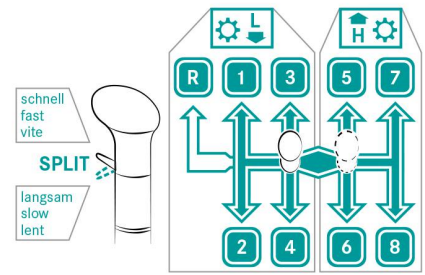

The 16-speed transmission is a manually operated transmission. The transmission is equipped with a double-H gearshift.

Thanks to additional reduction, you can select a total of 16 forwards gears and two reverse gears.

In neutral, the gearshift lever is in the shift gate between 3rd and 4th gear or 5th and 6th gear.

The transmission is divided into the following shift ranges:

- low shift range L with gears 1 to 4 and reverse gear R
- high shift range H with gears 5 to 8

Gear change options

Your selection of gears depends on the current type of use:

- Slow splitter group e.g. for driving off-road
- Fast splitter group e.g. for driving on the road
- Alternating between slow and fast splitter groups e.g. when the vehicle is loaded

Changing the shift range

Note

Damage to the transmission due to changing the shift range

If you change the shift range from the fast to the slow group at too high a speed, the transmission can be damaged. The following speed limits must be observed when shifting:

- When driving in the off-road gear of the transfer case, do not drive faster than 20 km/h when shifting.
- When driving in the on-road gear or in vehicles without transfer cases, do not drive faster than 25 km/h.

- Depress the clutch pedal.

Note

Fully depress the clutch pedal when changing gear. Otherwise the shift force assistance is not activated.

- Gently tap the side of the gearshift lever with your hand to overcome the lever pressure point between the shift ranges.
- Only shift to the desired gear after approximately one second and do not apply force.

Shifting the splitter group

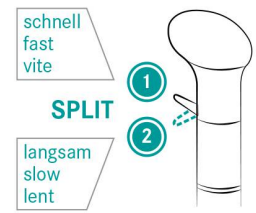

Choosing a splitter group selects a slow or fast ratio for the engaged gear without changing the gear itself.

- Shift the splitter group to the upper position for the high splitter group 1 or the lower position for the low splitter group 2.
- Depress the clutch pedal and hold it down until the splitter group is engaged.
- Release the clutch pedal.

Automated manual transmission

Function of the multifunction lever and the gear display

Danger

Risk of accident due to low supply pressure

In the event of pressure loss or if the supply pressure in the transmission/coupling circuit is too low, you will no longer be able to shift gear.

- ► Do not set the vehicle in motion or stop the vehicle as soon as possible, paying attention to surrounding road and traffic conditions. Pay attention to the traffic conditions.
- ► Use the parking brake to secure the vehicle against rolling away.
- ► Consult a qualified workshop immediately to have the compressed-air system repaired.

The vehicle has a selectable crawler mode. When crawler mode is activated, the vehicle automatically crawls forwards after the service brake has been released, and continues to roll at idle speed.

Mercedes PowerShift has eight, twelve or 16 forward gears and two or four reverse gears.

The transmission control controls clutch and transmission actuation during driving operation in the following cases, for example:

- when pulling away
- when manoeuvring
- when changing gear
- when stopping

Multifunction lever

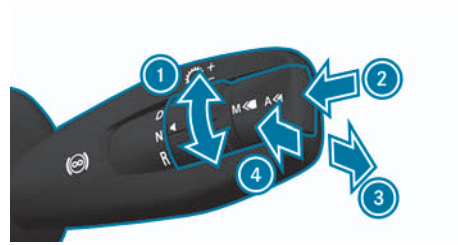

Multifunction lever operation

1 **Select direction of travel:**

- D Driving forwards (→ Page 257)
- N Neutral (→ Page 257)
- R Reverse

2 **Select drive program:** (→ Page 252)

- A Automatic drive program with the driving-specific and vehicle-specific shift program
- M Manual drive program

3 – Manual downshift in automatic (→ Page 258)/manual (→ Page 259)drive program

4 + Manual upshift in automatic (→ Page 258)/manual (→ Page 259) drive program

Gear display

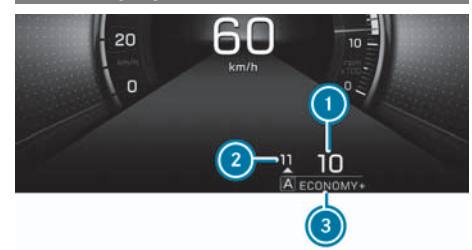

Overview of gear display

1 Direction of travel and/or selected gear

② Gear shifting recommendation (shift up°↑/ down° ↓) or pre-selected gear (flashing)

③ Drive program

Possible displays (example):

1-16	1st to 16th gear
N	Neutral position
N1	Slow splitter group
N2	Fast splitter group
E	Neutral position in EcoRoll mode
R1–R4	1st to 4th reverse gear
A	Automatic drive program
A economy A power A fleet A offroad A municip A economy+ A heavy A fire–sv	Automatic drive program with drive-specific and vehicle-specific shift program
M	Manual drive program

Drive programs and drive functions

Function of the automatic transmission and manual drive program

Automatic transmission

In the standard drive program A, you can switch EcoRoll mode and crawler mode on and off in the multimedia system in the Functions menu, Assistance systems menu item.

For vehicles without a turbo retarder clutch and with the **offroad** shift program, you can switch the crawler mode specially designed for off-road driving on or off (→ Page 255) using the button.

Automatic transmission with drive-specific shift program

Depending on the type of transmission and programming, the shift program is designed for the following functions:

- Performance-oriented, dynamic driving mode with relatively high engine speeds — **power**
- Fuel-efficient driving mode — **economy**
- Performance-oriented driving mode on light off-road terrain and on construction sites with relatively high engine speeds — **offroad**
- Performance-oriented, dynamic driving mode with relatively high engine speeds and a high gross combination mass — **heavy**
- Fleet mode — **fleet**
- Waste collection vehicle mode — **municip**
- Dynamic driving mode with optimum acceleration during emergency and alarm responses by fire engines — **fire-sv**

In shift programs **power**, **offroad**, **heavy** and **fire-sv**, the automatic transmission only shifts to the next gear at relatively high engine speeds.

The crawler mode configured for on-road driving is automatically switched off in the **offroad** shift program. For vehicles without a turbo retarder clutch, you can switch on the crawler mode specially designed for off-road driving with the button (→ Page 255).

When you depress (kick down) and hold the accelerator pedal beyond the pressure point in the **heavy** shift program, the transmission does not shift up automatically.

The **economy** shifting program has the following features:

- EcoRoll mode is always switched on.
- The adjustable speed in cruise control is limited to 85 km/h.

The **fleet** shift program has the following features:

- EcoRoll mode is always switched on.
- The maximum speed is limited to around 85 km/h.
- The automatic drive program is always active, except in gears one to six and in reverse gear.

The **municip** shift program has the following features:

- EcoRoll mode is deactivated.
- Crawler mode is deactivated.
- The clutch overload warning tone is deactivated.

The **economy+** shift program has the following features:

- EcoRoll mode is always switched on.
- The adjustable speed in cruise control is limited to 82 km/h.

Manual drive program

In the manual drive program, you change gears yourself. The gearshift recommendation is shown on the display of the instrument cluster.

In particularly demanding driving situations, you should switch to the manual drive program. This will enable you to avoid any undesired interruptions in tractive power that may occur with automatic gear shifts.

Select the drive program

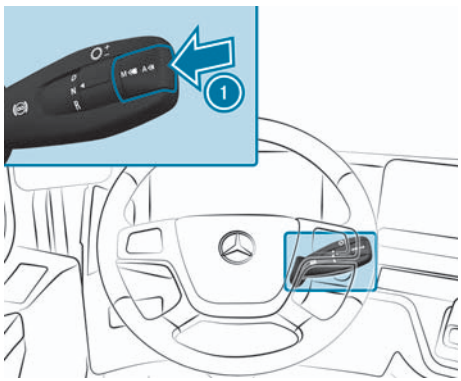

For vehicles with the **fleet** shift program, the manual drive program can only be activated up to 6th gear (on 12-speed transmissions). It is not possible to choose between the shift programs.

After the vehicle is started, the **economy**/**economy+** drive program is always switched on. For vehicles with the fire–sv shift program, this is always the **A fire–sv** drive program. For vehicles with the fleet shift program, this is always the **A fleet** drive program. For vehicles with the **offroad**, **municipal**or**heavy** shift

programs, the last-selected program is always active after the vehicle starts.

After the display check, the display shows A or e.g. A economy and N or N 1.

The drive program can be changed at any time.

- **Activate the manual drive program:** Press and hold the A/M button ⓘ.
  - ◁ The display will show the manual drive program M, the selected gear, and a gearshift recommendation.
- **To switch automatic on:** Press the A/M button briefly ⓘ.
  - ◁ The display will show the automatic drive program A and the selected and preselected gears.
- **Shift the automatic shift program:** Press the A/M button briefly ⓘ.
  - ◁ When the display shows A, the standard shift program is switched on. If, for example, the display shows A economy or A power, the drive-specific shift program is switched on. If, in the A power shift program, the transmission control does not detect a higher power requirement for more than ten minutes, the transmission control will automatically shift to the more economical standard shift program.

Function of the EcoRoll mode and crawler mode

EcoRoll mode

EcoRoll mode facilitates a fuel-saving driving style. If you do not depress the accelerator pedal while driving, the transmission control shifts to neutral position depending on the driving situation.

In the following cases, the transmission does not shift into neutral position or shifts from neutral position back into a suitable gear:

- You depress the accelerator pedal.
- You depress the service brake pedal.
- The continuous brake is activated.
- Cruise control or Proximity Control Assist controls the speed.
- The limiter is active and the set limit speed is exceeded.
- The gross combination weight is very high.

In shift programs **power**, **heavy**, **municip**, **offroad** and **fire–sv**, EcoRoll mode is always switched off and cannot be switched on. In the standard drive program A and in the other shift programs, EcoRoll mode is always switched on after the vehicle is started.

You can switch EcoRoll mode on and off in standard drive program A in the multimedia system in the Functions menu, Assistance systems menu item.

Note

You cannot switch off EcoRoll mode in the **economy** and **fleet** shift programs.

EcoRoll mode is active from a speed of approximately 35 km/h.

Note

When EcoRoll mode is switched on, steering forces on the multifunction steering wheel may be somewhat greater in certain driving situations, for example, on slightly curving downhill gradients. This does not endanger operational safety or road safety.

Crawler mode

Crawler mode allows the vehicle to creep forwards automatically when the service brake is released and to coast when the accelerator pedal is not depressed. You can reduce the crawling speed by gently depressing the brake pedal. After creeping forwards, the vehicle will coast at idle speed until you bring the vehicle to a halt using the service brake or until crawler mode is deactivated or cancelled.

Creeping forwards and coasting are possible in all pulling-away gears. You can manually change gear in traffic jams, for example, to adjust the rolling speed to that of the traffic.

Crawler mode is automatically deactivated in the following cases:

- You shift the transmission to neutral position N for more than around two seconds.
- You activate the rocking-free drive function.
- The parking brake is applied.
- Proximity Control Assist controls the speed.
- The idle speed is above approx. 700 rpm.
- Active Brake Assist intervenes.
- There is a risk of the clutch being overloaded.
- A change of direction cannot be carried out.

When none of the conditions are present any longer, crawler mode is reactivated by pulling away using the accelerator pedal or shifting into a start-off gear again with the service brake depressed.

When crawler mode reaches its functional limits, it is automatically cancelled in the following cases.

- The vehicle does not start moving due to an unexpectedly high driving resistance, for example.
- The wheels are spinning on a slippery carriageway, for example.
- The driving resistance when crawling and coasting exceeds the functional limit.

If crawler mode has been automatically cancelled, the instrument cluster will show the display message Creeping mode cancelled. A warning tone will sound and the transmission control will disengage the clutch. In this case, depress the brake pedal to bring the vehicle to a halt or depress the accelerator pedal to move off again.

Crawler mode is designed for driving on roads on vehicles without a driven front axle. You can switch crawler mode adapted for on-road driving on and off in the multimedia system in the Functions menu, Assistance systems menu item.

The crawler mode configured for on-road driving is always switched off in the **off-road** shift program. You can switch the crawler mode specially configured for off-road driving on and off in all permissible pulling-away gears using the button (→ Page 255).

The crawler mode configured for on-road driving is always switched on after the vehicle is started in the standard drive program A and in the other shift programs.

On all-wheel drive vehicles, crawler mode is always deactivated after the vehicle starts.

Once crawler mode has been activated, you can activate creeping forwards by shifting into a start-off gear with the service brake depressed or by shifting into a start-off gear and then depressing the accelerator pedal.

If you change over to the manual drive program, the current crawler mode will remain activated. After you change back to the automatic drive program, the crawler mode assigned to the drive and shift program will be activated. It may not be available again until the accelerator pedal has been used for pulling away once more or you have shifted into a start-off gear with the service brake depressed.

Switching crawler mode on and off (all-wheel drive vehicles)

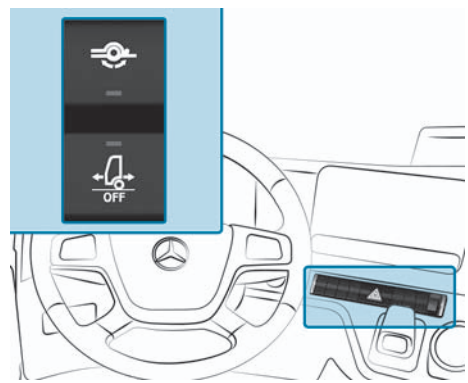

The crawler mode adapted specially for off-road driving and all-wheel drive vehicles is always deactivated once the vehicle is started. The indicator lamp on the button button will light up.

- **To switch on:** Press the lower section of the button.
  - ◁ The indicator lamp in the button goes out.
- Depress the service brake and shift into a start-off gear.

or

- Depress the accelerator pedal and pull away.
  - ◁ Crawler mode is activated.

> **Note**
> If crawler mode is not activated within around 10–15 seconds of pressing the button, the indicator lamp in the button will light up again. Crawler mode then remains deactivated.

- **Switching off:** Press the lower section of the button again.
  - ◁ The indicator lamp on the button will light up.

Crawler mode is automatically deactivated in the following situations:

- A gear above the permissible pulling-away gears is selected.
- Neutral position is selected.
- The parking brake is applied.
- The rocking-free drive function is activated.

Rocking-free function

Note

Damage to the dry clutch due to a very high gross combination mass

Due to a very high gross combination mass, the dry clutch can be overloaded and damaged in rocking mode.

► Do not use the rocking mode with a very high gross combination mass.

You can use the rocking-free function to rock the vehicle out of a deep rut in all permissible pulling-away gears. After the rocking-free function is switched on, the transmission control will automatically switch to the manual drive program. When you release the accelerator pedal while rocking free, the dry clutch will suddenly open and the vehicle will roll back. When you depress the accelerator pedal again, the dry clutch will close immediately and the vehicle will pull away.

After engaging the start-off gear, you can switch the rocking-free drive function on and off via the multimedia system using menu Functions, menu item Switch.

In all-wheel drive vehicles, switch the rocking-free function on or off after engaging the start-off gear with the button.

The rocking-free function will switch off automatically in the following cases:

- You are driving above approximately 8 km/h.
- You shift to a gear above the permissible pulling-away gears.
- Vehicles with turbo retarder clutch: The instrument cluster shows the display message Clutch under heavy strain.

Switching crawler mode on/off (all-wheel drive vehicles)

► Press the button above.

◁ When the indicator lamp in the button lights up, the rocking-free drive function is switched on.

Notes on pulling away and stopping (automated manual transmission)

Depending on the transmission, different pulling-away gears can be selected.
1st – 2nd gear can be selected with 8-speed transmissions, 1st – 6th

gear with 12-speed transmissions and 1st – 8th gear with 16-speed transmissions.

If the clutch is under heavy strain, pulling away is only possible in 1st gear. In the **municip** and **heavy** shift programs, the highest gear that can be used for pulling away is 2nd gear (→ Page 574).

Pulling away and stopping the vehicle (automated manual transmission)

Pulling away

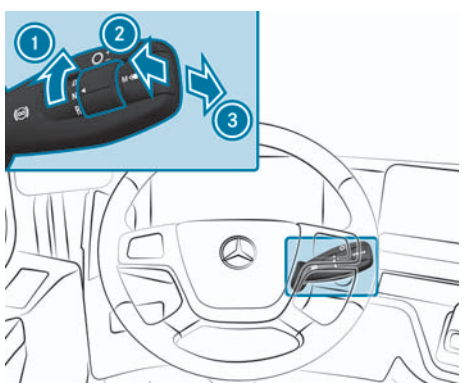

► Start the vehicle.

► Turn the direction switch to position D (drive/forwards) 1.

◁ In all drive programs, the transmission control will shift to a suitable start-off gear depending on the vehicle load, which can be changed manually.

► Release the brake pedal or the parking brake and depress the accelerator pedal.

◁ To achieve higher torque, the engine speed may increase to approximately 1100 rpm when pulling away in first gear with the accelerator pedal fully depressed. The engine speed is increased automatically and as required for pulling away.

Changing the start-off gear

► Pull the multifunction lever backwards briefly (to shift up) 2 or push it forwards briefly (to shift down) 3.

◁ The transmission control shifts up or down one gear. When the selected gear appears on the display, gear shifting is complete.

or

► Vehicles with 12-speed/16-speed transmission: Pull the multifunction lever backwards and hold it there (to shift up) 2 or push it forwards and hold it there (to shift down) 3.

◁ Vehicles with 12-speed transmission: The transmission control will shift up or down to 1st, 3rd or 6th gear. If the display shows 1, 3 or 6, gear shifting is complete.

◁ Vehicles with 16-speed transmission: The transmission control will shift up or down to 1st, 4th or 8th gear. If the display shows 1, 4 or 8, gear shifting is complete.

Note

When the service brake is released after the first time the vehicle stops, the vehicle will begin to crawl (→ Page 253).

Stopping

- Depress the brake pedal.
  - ◁ The transmission control will shift down according to the driving situation and to a suitable start-off gear shortly before it comes to a standstill. When the service brake is released again after stopping, the vehicle will crawl forwards again.

Selecting neutral position

A warning tone will sound if the vehicle is stationary for about nine minutes with the engine running and a gear selected. N will flash on the display. After another minute, the transmission control will automatically select neutral position.

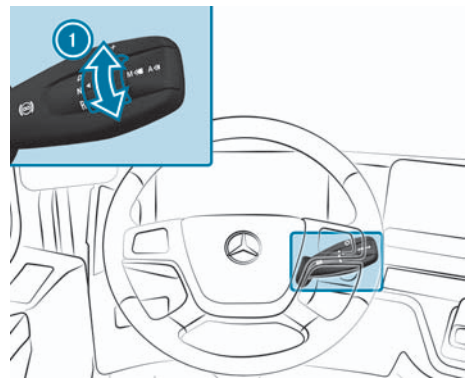

Shift the transmission to neutral position during relatively long stops, e.g. at traffic lights or before switching off the vehicle.

- Depress the brake pedal or apply the parking brake.
- Turn the direction switch to the N position (neutral) 1.

Driving in the automatic drive program

Using kick-down

Note

In the **economy** and **fleet** shift programs, the kick-down function is limited.

The kick-down serves to accelerate the vehicle to the maximum extent.

If necessary, the pull-away performance can be increased using the kick-down function, e.g. on relatively steep uphill gradients. When pulling away in 1st gear, the kick-down function delivers a higher engine speed.

- Depress the accelerator pedal beyond the point of resistance as far as it will go.
  - ◁ The transmission control will shift to a lower gear if required.
- Ease off the accelerator pedal slightly once the desired speed is reached.
  - ◁ The transmission control will shift up again.

Decelerating

- ► Release the accelerator pedal.
- ► Depress the brake pedal.

or

- ► Activate the continuous brake.
  - ◁ The transmission control will automatically shift down according to the driving situation.

Selecting a gear manually

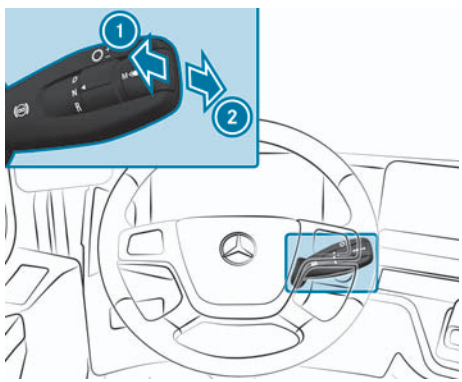

Another gear can also be selected manually. The automatic control functions are not changed by doing this.

- ► Depending on the number of gears to be shifted, briefly pull the multifunction lever backwards (to shift up) ① or briefly push it forwards (to shift down) ② a corresponding number of times.

or

- ► Pull the multifunction lever backwards and hold it there (to shift up) ① or push it forwards and hold it there (to shift down) ②.
  - ◁ The transmission control will determine the suitable gear (target gear) for the selected shift direction depending on the vehicle load. The transmission control shifts up or down at least one gear to a suitable gear.

Driving using the manual drive program

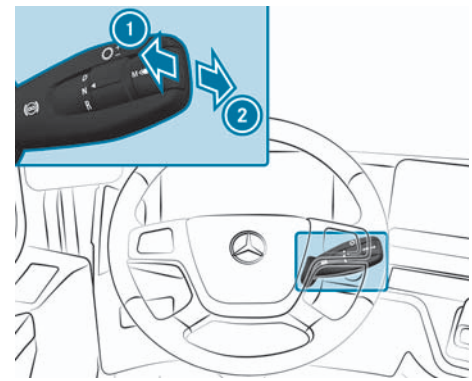

- ► Depending on the number of gears to be shifted, briefly pull the multifunction lever backwards (to shift up) ① or briefly push it forwards (to shift down) ② a corresponding number of times.

or

- ► Pull the multifunction lever backwards and hold it there (to shift up) ① or push it forwards and hold it there (to shift down) ②.

◁ The transmission control will determine the suitable gear (target gear) for the selected shift direction depending on the vehicle load. The transmission control shifts up or down at least one gear to a suitable gear.

Automatic transmission

Overview of push-button gearshift and gear display

Note

Damage to the automatic transmission when rolling in neutral

If the automatic transmission is in neutral when the vehicle is rolling, this may lead to damage to the automatic transmission.

- ► Do not allow the vehicle to roll in neutral, especially when driving downhill.
- ► Follow the information on towing the vehicle.

If the retarder (engine brake/retarder) is active, the engine speed for downshifts will be higher than when the retarder is not active.

- ► Pay attention to the display messages on the automatic transmission control panel and the display messages on the instrument cluster. These indicate special operating states and help to prevent damage to the automatic transmission.

Note

Information provided by the automatic transmission control unit has a higher priority.

You can limit or extend the shift range at any time.

Push-button gearshift and gear display

Push buttons

1. Shift range and gear display
2. MODE button
3. Extend shift range △
4. Limit shift range ▽
5. Driving position D
6. Neutral position N
7. Reverse gear R

Fault messages for automatic transmission

If the shift range or the currently engaged gear is not shown on the ① display, the display remains dark or implausible information is output, this means there is an operating fault in the automatic transmission.

If the Transmission faulty display message appears on the instrument cluster, read and obey the information and instructions.

Changing drive programs

The automatic transmission is equipped with the **Economy** and **Power** drive programs. The drive programs support the desired driving style.

The **Economy** drive program offers a comfort-oriented, fuel-saving driving style and makes it easier to drive on slippery road surfaces.

After the vehicle is started, the standard **Economy** drive program will always be active.

The **Power** drive program is designed for driving with high performance requirements or driving dynamics.

For fire engines, the standard drive program is the **Power** drive program and this is always active after the vehicle is started.

- **Changing the drive program:** Press and hold the ② MODE button.
  - ◁ The display ① shows the selected drive program. If nothing is displayed, this means the standard drive program is active.

Driving tips

Driving on uphill or downhill gradients

Note

Risk of engine damage due to the limiting speed being exceeded

If the shift range is limited, the engine speed may exceed the limiting speed. Exceeding the limiting speed for an extended period of time may lead to engine damage.

- If the shift range is limited, do not allow the engine speed to rise into the red danger zone of the rev counter.

- When driving on extreme uphill gradients or long downhill gradients, limit the shift range in good time for high engine output or engine braking power.

Manoeuvring and rocking free

When manoeuvring in confined spaces:

- use measured braking to regulate the vehicle speed.
- Accelerate slowly and evenly.

Note

At low speed, you can change between the drive position D and the reverse gear R without braking. This helps, for example, when manoeuvring quickly or rocking free in snow or slush.

Operation

Notes on axle and wheel loads

Note

Damage to vehicle parts if the permissible gross mass is exceeded

If the permissible gross vehicle weight, the permissible axle load or the permissible wheel load are exceeded, the tyres, chassis frame and axle may be damaged.

Even if the permissible wheel load difference of 4% is exceeded, the tyres, chassis frame and axle may be damaged.

- Observe the permissible values for gross mass, axle and wheel loads.
- Observe the permissible difference between wheel loads of 4%.

Note

Damage to vehicle parts if changeable platforms/containers tip and roll off or are set down

The maximum permitted axle load may be exceeded if changeable platforms/containers tip and roll off or are set down. The tyres, chassis frame and axle may be damaged.

- Observe the permissible axle load.
- Do not exceed the value specified in the installation guidelines.

- Observe the information on attachments, bodies, installations and conversions (→ Page 3).
- While driving, regularly monitor the warning- and indicator lamps and the displays in the instrument cluster.

Displaying axle loads and setting axle load indicator

Displaying axle loads

Vehicles with air suspension: The vehicle may be equipped with an axle load display. The axle load display is not calibrated, nor is it a system capable of being calibrated. The measured data provides only an approximate guide. The values cannot be used for official purposes. In order to avoid inaccuracies in the measurement, make sure that the vehicle is evenly laden. When the chassis is at driving level, the axle load measuring system determines the axle load from the pressure in the air suspension bellows.

- Park the vehicle on a level surface.
- Apply the parking brake.
- Set driving level (→ Page 334).
- Switch off the starting-off aid (→ Page 341).
- In the multimedia system, select the Axles menu item in the Suspension menu.
  - ◁ The axle load of the individual axles and the gross vehicle weight are displayed.

You can adjust the axle load display if there is a notable difference between the axle load display and the weighbridge results.

Setting the axle load display

- ► Drive the vehicle onto a single-axle load-measuring device.
- ► Display the axle loads.
- ► Press the axle load calibration button [ ].
  - ◁ The input window Achslastkalibrierung is displayed.
- ► Select the desired axle.
- ► Correct the axle load according to the value shown by the single-axle load-measuring device.

Using the turbo retarder clutch

The turbo retarder clutch enables sensitive and wear-free moving off and manoeuvring at the lowest speeds and high torque. Power transmission between the engine and transmission takes place via a fluid circuit and a dry clutch.

If power is transmitted while driving with the dry clutch open, the oil temperature in the turbo retarder clutch's circuit increases depending on the load. If the oil temperature is too high, the instrument cluster shows a display message and a warning tone sounds.

If the oil temperature of the turbo retarder clutch is too high:

- ► Shift to a lower gear.
  - ◁ The engine speed will increase and the dry clutch will be closed.

If the display message and warning tone do not switch off:

- ► brake and stop the vehicle, taking into account the road and traffic conditions.
- ► Apply the parking brake.
- ► Shift the transmission to neutral.
- ► Let the engine run for around one minute at approximately 1200 rpm.

If the display message and warning tone still do not switch off:

- ► Have the turbo retarder clutch checked at a qualified specialist workshop.

Pulling away

Note

In the automatic drive program, the transmission control determines the optimum start-off gear and shift point. The dry clutch opens or closes depending on the driving resistance. As a result, the vehicle can be started off with maximum torque at a low engine speed (approx. 1200 rpm). Only when manoeuvring mode is switched on does the vehicle creep forwards automatically and coast after the service brake has been released (→ Page 265).

Note

If the dry clutch is open when pulling away, the transmission does not change gear.

- ► Please read the notes on the electronic parking brake (→ Page 237).

Level stretches

- ► Set the multifunction lever to [D].

- ► Depress the accelerator pedal.
  - ◁ The indicator lamp [ ] in the instrument cluster will come on.
  - ◁ The turbo retarder clutch is filled and the vehicle pulls away. After pulling away, the indicator lamp [ ] in the instrument cluster goes out and power is transmitted via the dry clutch.

Uphill slopes

The pulling-away characteristics depend on the following points:

- Gradient of the road surface
- Gross combination mass
- How quickly you depress the accelerator pedal

- ► Apply the parking brake or engage the hill holder.
- ► Switch on the automatic drive program .
  - ◁ The transmission control determines a suitable start-off gear.
- ► Set the multifunction lever to [D].
- ► Depress the accelerator pedal.
  - ◁ The indicator lamp [ ] in the instrument cluster will come on.
  - ◁ The turbo retarder clutch is filled and the vehicle pulls away. After pulling away, the indicator lamp [ ] in the instrument cluster goes out and power is transmitted via the dry clutch.

Using hydromove

A low pre-filling of the turbo retarder clutch makes the response time of the accelerator pedal more direct and reduces the rolling of the vehicle against the direction of travel when moving off. The vehicle can be moved forwards or backwards slowly and in a controlled manner simply by changing the accelerator pedal position, e.g. on a downhill gradient. This is particularly advantageous when driving with a very high gross train weight, as the gear does not need to be changed and the service brake does not have to be pressed.

Driving down a steep gradient always takes place in a moving-off gear against the desired direction of travel.

The drive function is always switched on after a vehicle start. The drive function is only automatically deactivated in the **offroad** shift program.

The hydromove drive function can be activated or deactivated in the multimedia system using the Functions menu, Assistance systems menu item.

Driving down a slope forwards

- ► Stop the vehicle using the service brake.
- ► Depress the brake pedal.
- ► If necessary, switch on the Hydromove drive function.
- ► Set [R] the multifunction lever to (→ Page 250).
- ► **Driving downhill quickly:** Release the service brake. Do not depress the accelerator pedal.
  - ◁ The vehicle rolls with minimal deceleration.

- **Driving downhill slowly:** Do not depress the accelerator pedal.
  - ◁ The further the accelerator pedal is depressed, the greater the drive force against the direction of travel. The vehicle rolls at a slower speed.

Depending on the gross train weight, the downhill gradient and the road surface you are driving on, you can stop the vehicle by depressing the accelerator pedal alone and drive back up the gradient again.

Note

If you want to drive down a slope in reverse, set the multifunction lever to D.

Adjusting power steering

You can adjust the power steering of your vehicle to the current operating conditions in the multimedia system.

- In the multimedia system, select Electric power steering in the Functions ▶▶ Assistance systems menu.
  - ◁ The following settings are available:
    - Standard
      Normal power steering
    - High
      Increased power steering for steering wheel angle
    - Manoeuvring
      Increased power steering for steering wheel angle and steering wheel return

Note

The selected setting remains stored even after the vehicle is switched off.

Using manoeuvring mode

For vehicles with a turbo retarder clutch, manoeuvring mode allows you to manoeuvre more precisely. You can also start driving using manoeuvring mode. The starting power is higher in the **power**, **heavy** and **offroad** shift programs. In manoeuvring mode, the vehicle pulls away as soon as you release the service brake — automatic forward crawling.

If manoeuvring mode is active, the transmission does not change gear automatically. Deactivate manoeuvring mode to continue driving.

To prevent the turbo retarder clutch from overloading, manoeuvring mode is automatically deactivated depending on the load or after approximately nine minutes.

- **Activation:** Stop the vehicle and leave it switched on.

- ► Depress the brake pedal.
- ► Press the lower section of the button [ ].
  - ◁ The indicator lamp on the [ ] button will light up.
  - ◁ In manoeuvring mode, engine speed is limited to 1400 rpm and the transmission changes to the manual drive program [M].
- ► Depending on the gross combination weight, select a suitable start-off gear for pulling away.
- ► Release the service brake.

Note

When manoeuvring mode is active, it is only possible to change gears when the vehicle is stationary and the brake pedal is depressed.

- ► **Deactivation:** Press the lower section of the button [ ] again.

or

- ► Depress the accelerator pedal past the pressure point to the stop (kick-down).
  - ◁ The indicator lamp in the button [ ] goes out.

Function of ASR (anti-slip control)

If ASR intervenes, this has the following effects:

- The indicator lamp [ ] or [ ] flashes in the instrument cluster.
- Cruise control cannot be activated.

If cruise control has already been activated, it will remain active. It is not possible, however, to accelerate or decelerate using cruise control.

When you switch on the vehicle, the indicator lamp [ ] or [ ] lights up in the instrument cluster and goes out again after approximately two seconds. ASR is activated.

If the indicator lamp [ ] or [ ] does not go out, then ASR has a malfunction.

- ► Have the malfunction rectified at a qualified specialist workshop.

Deactivating and activating ASR

Danger

Risk of skidding if ASR is deactivated

If you deactivate ASR, ASR cannot carry out vehicle stabilisation when pulling away and accelerating.

- ► ASR must only be deactivated in the following situations.

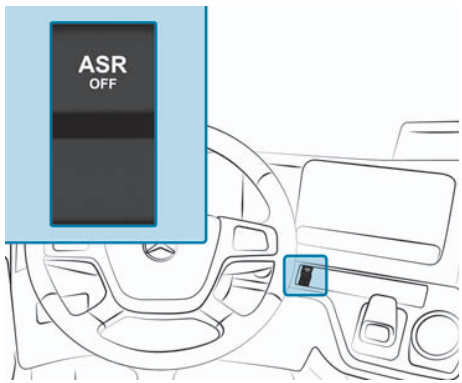

Note

Vehicles with Stability Control Assist lack the [ASR OFF] button. Traction control (ASR function) is part of Stability Control Assist (→ Page 268). When Stability Control Assist is deactivated, traction control is also deactivated.

It may be best to deactivate ASR in the following situations:

- when using snow chains
- when driving on roads with loose surfaces, e.g. gravel

- ► If the carriageway is slippery, engage the differential lock in an anticipatory fashion (→ Page 268).
- ► **To switch on and off:** Press the button [ASR OFF].
  - ◁ When the indicator lamp [TC] or [ ] on the instrument cluster comes on, ASR is deactivated.

Function of Stability Control Assist

Stability Control Assist is operational at speeds above approximately 20 km/h, regardless of the operating status of the service brake or continuous brake. If Stability Control Assist intervenes, the indicator lamp [ ] in the instrument cluster flashes.

If the indicator lamp [ ] in the instrument cluster lights up continuously when the vehicle is started, Stability Control Assist has a fault. Have Stability Control Assist checked at a qualified specialist workshop.

Regardless of the vehicle load or road surface conditions, Stability Control Assist can reduce the risk of the following situations:

- The tractor/semitrailer combination or drawbar combination skidding.
- The tractor/semitrailer combination or drawbar combination jack-knifing.
- The tractor/semitrailer combination or drawbar combination is at risk of tipping.

Stability Control Assist stabilises a tractor/semitrailer combination or drawbar combination with a maximum of two trailers or semitrailers using the following automatic control interventions:

- Engine output reduction
- Targeted braking of individual wheels on the towing vehicle
- Targeted braking of the trailer or semitrailer
- Braking the entire tractor/semitrailer combination or drawbar combination

When driving with more than two trailers or semitrailers, Stability Control Assist must be deactivated.

Deactivating and activating Stability Control Assist

Danger

Risk of skidding and accident due to deactivating Stability Control Assist

If you deactivate Stability Control Assist, it cannot stabilise the vehicle.

- Only deactivate Stability Control Assist in the following situations.

Note

When you start the vehicle, Stability Control Assist is automatically activated.

It may be better to deactivate Stability Control Assist in the following situations:

- when driving on a loose surface
- when driving with snow chains
- when operating a snow plough

ASR is also deactivated.

- Switch on Stability Control Assist as soon as the situations previously described are no longer present.

Note

If you drive with more than two trailers or semitrailers, you must deactivate Stability Control Assist. Otherwise, malfunctions or faults might occur.

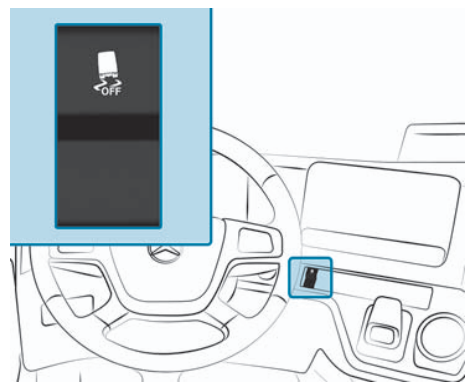

Example: Stability Control Assist OFF button

- Press the [OFF] button.
  - ◁ If the indicator lamp [OFF] in the instrument cluster comes on, Stability Control Assist is deactivated.

Using differential locks

Danger

Risk of accident when the differential lock is engaged

When driving off-road or driving with an engaged differential lock in the automatic drive program, the electronic management system may perform unwanted gear changes.

The vehicle may, for example, roll backwards on slopes.

- Always drive carefully and be ready to brake.
- Switch to the manual drive program.

Danger

Risk of accident when the differential lock is engaged on a firm surface

If you engage differential locks on a firm and non-slip surface, you may lose control of the vehicle.

- Always disengage the differential locks as soon as possible on a firm, high-traction surface.

Note

Damage to the differential as a result of improper use of the differential locks

The following points should be observed when using differential locks to avoid damaging the differential:

- Avoid spinning drive wheels on one side, engage the differential locks in advance.
- Do not engage the differential locks when pressing the accelerator or brake pedal.
- Only engage the differential lock when the vehicle is stationary or at walking pace.
- Pull away slowly after engaging the differential lock.
- Do not drive on high-grip carriage-way with engaged differential locks.
- Do not drive faster than 50 km/h with the differential locks engaged.

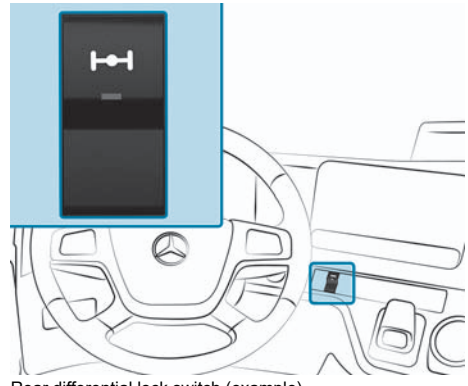

Rear differential lock switch (example)

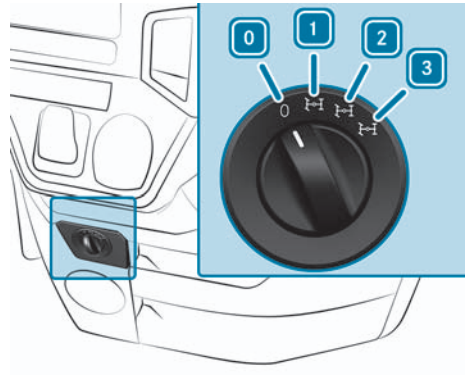

Differential lock control knob (example)

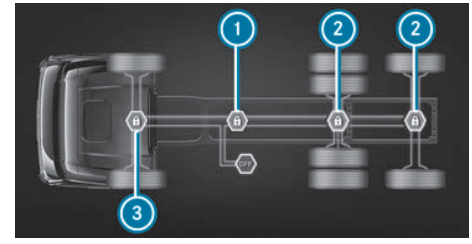

Differential locks display (example)

Differential locks

0	Differential lock off
1 / 1	Shift position and display of inter-axle lock, axle through drive
2 / 2	Shift position and display of transverse axle locks, rear axles
3 / 3	Shift position and display of transverse axle locks, front axles also engaged

Note

Vehicles with one differential lock have a switch; vehicles with several differential locks have a control knob.

If the inter-axle lock is engaged when driving off-road, an ABS control intervention

can lead to an interruption in the tractive power in switch positions 1 or 2.

The status of the differential locks is shown in the menu Suspension, menu item Axles of the multimedia system.

When the differential lock is engaged, the display will show the associated status display ○ in yellow. When the differential lock is disengaged, the display will show the associated status display ○ in grey. If the status display flashes, the differential lock is not yet engaged or disengaged. The conditions for engaging or disengaging have not been fulfilled, e.g. due to differing wheel speeds. The differential lock will be engaged automatically as soon as all engagement conditions are met.

- Engage the differential locks, e.g. on slippery carriageway or off road, to prevent drive wheels from spinning on one side.

When a differential lock is engaged, the shift range for upshifts is automatically limited for vehicles with an automated manual transmission. During ABS braking regulation, the inter-axle locks and the engaging all-wheel drive are deactivated and the circle on the display flashes. When ABS braking regulation ceases, the inter-axle locks and the all-wheel drive will be engaged again.

- Vehicles with automated manual transmission: In particularly challenging driving conditions, select the manual drive program to avoid unwanted gear shifting operations and interruptions to tractive power (→ Page 251).

To switch on: Vehicles with one differential lock

- Stop the vehicle.
- Press the button above.
  - ◁ The indicator lamp on the button will light up.
  - ◁ The indicator lamp in the instrument cluster will come on.
  - ◁ The instrument cluster will show a display message with the current status of the differential locks.

Deactivation: Vehicles with one differential lock

- Press the lower section of the button .
  - ◁ The indicator lamps in the button and instrument cluster go out.
  - ◁ The instrument cluster will show a display message with the current status of the differential locks.

Activation: Vehicles with several differential locks

Note

The individual differential locks can be selected only one after the other.

- Stop the vehicle.
- Turn the control knob of the differential locks to position 1.
  - ◁ The inter-axle locks in the inter-axle or transfer case are engaged.

- ◁ The indicator lamp [⊢⊣] in the instrument cluster will come on.
- ◁ Vehicles with engageable all-wheel drive: The indicator lamp [(TC)] comes on.

► Turn the control knob of the differential locks to position [2].

- ◁ The transverse axle locks on the rear axles are engaged.

► Turn the control knob of the differential locks to position [3].

- ◁ The transverse axle locks on the front axles are engaged.
- ◁ The indicator lamp [(AWD)] comes on.

Deactivation: Vehicles with several differential locks

Note

Vehicles with engageable all-wheel drive (code G4E): If possible, disengage the inter-axle locks while still on a loose surface and not on a high-grip carriageway. Otherwise, disengaging the inter-axle lock can lead to a pressure surge and a noticeable jerk in the cab. Different tyre diameters between the front and rear axles can also lead to a noticeable pressure surge when the inter-axle lock is disengaged. Avoid a difference of more than 3 % between the tyre diameters on the front and rear axles.

► Turn the switch of the differential locks to position [0].

- ◁ When switching from position [3] to position [2]: The indicator lamp [(AWD)] goes out.
- ◁ The differential locks are disengaged. The differential lock indicators on the display go out.
- ◁ The indicator lamp [⊢⊣] in the instrument cluster goes out.
- ◁ Vehicles with engageable all-wheel drive: The indicator lamp [(TC)] goes out.

► If the status display ◯ flashes, briefly change your speed, e.g. pull away, brake or change the direction of travel. Do not continue driving; otherwise, the differential may be damaged.

► If the ◯ status display does not go out when the inter-axle locks are disengaged, stop the vehicle and reverse for a short distance.

If the differential lock is engaged and you are driving faster than 50 km/h, the current setting of the differential lock is again shown in the display.

► Disengage the differential locks or drive slower than 50 km/h.

Engaging/disengaging front axle transfer case

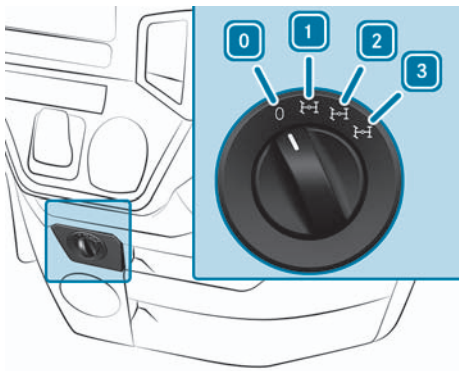

Differential lock control knob (example)

Control knob

- 0 Differential lock off
- 1 Switch position for inter-axle lock, axle through drive
- 2 Switch position for cross-angle locks, rear axles additionally engaged
- 3 Switch position for cross-angle locks, front axles additionally engaged

The status of the engageable front axle is shown in menu Suspension, menu item Axles of the multimedia system.

When the front axle is not engaged, the display shows the associated status display ○ in grey.

When the front axle is engaged, the associated status display ○ lights up yellow.

If the status display ○ is flashing, the front axle is not yet engaged/disengaged.

The engagement or disengagement conditions have not been met, e.g. different wheel speeds.

The transfer case inter-axle lock is engaged or disengaged and the front axle is engaged or disengaged as soon as all engagement conditions have been met.

When the front axle is engaged, the shift range for upshifts is automatically limited for vehicles with an automated manual transmission.

During ABS braking regulation, the inter-axle lock is disengaged, the front axle is disengaged and the status display ○ flashes. Once ABS has finished intervening, the inter-axle lock and the front axle are engaged again.

Engaging the front axle transfer case

- ▶ Stop the vehicle.
- ▶ Turn the switch of the differential locks to position 1.
  - ◁ The front axle and the rear axles are driven and the inter-axle lock is engaged. There is no rotational speed compensation between the front axle and the rear axles.

Disengaging the front axle transfer case

- ▶ Stop the vehicle.
- ▶ Turn the switch of the differential locks to position 0.
  - ◁ Only the rear axles are driven. The inter-axle lock is deactivated.

Note

The 2 and 3 positions are the functions of the differential lock (→ Page 268).

Switching the off-road gear transfer case on and off

Note

Damage to the retarder due to fast driving in off-road gear

The retarder may be damaged if the vehicle speed is too high when the off-road gear is selected.

- Do not exceed a road speed of 50 km/h.

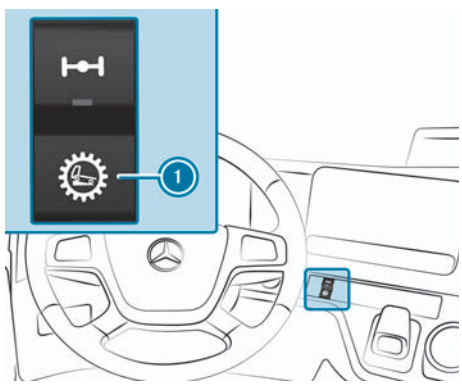

(1) Off-road gear button (example)

If the off-road gear is selected on vehicles with an automated manual transmission, the shifting range is automatically limited to upshifting. If the inter-axle lock is engaged when driving off-road, an ABS control intervention can lead to an interruption in the tractive power in switch positions [1] or [2].

- Vehicles with automated manual transmission: In particularly challenging driving conditions, select the manual drive program to avoid unwanted gear shifting operations and interruptions to tractive power (→ Page 251).

Engaging the off-road gear

- Stop the vehicle.
- Shift the transmission to neutral.
- Vehicles with automatic transmission: Shift the transmission into neutral [N].
- Press the button [⚙].
  - ◁ When all engagement conditions are met, the off-road gear is engaged and the [⚙] symbol is shown in the instrument cluster.

Disengaging off-road gear

- Stop the vehicle.
- Shift the transmission to neutral.
- Vehicles with automatic transmission: Shift the transmission into neutral [N].
- Press the button [⚙].
  - ◁ The off-road gear is disengaged when all engagement conditions are met. When the on-road gear is selected again, the [⚙] indicator in the instrument cluster goes out.

Notes on hydraulic auxiliary drive

Danger

Risk of injury due to acceleration forces when driving off-road

You could be thrown out of your seat, for example.

- Always fasten your seat belt, including when driving off-road.

► Only switch on the hydraulic auxiliary drive when driving off road.

The Stability Control Assist and ASR (anti-slip control) are deactivated during activation of the hydraulic auxiliary drive.

The following indicator lamps light up when the hydraulic auxiliary drive is active:

- Stability Control Assist
- ASR (acceleration skid control system) or

When you switch on the hydraulic auxiliary drive, this has the following effects:

- Crawler mode is automatically deactivated (→ Page 253).
- The rocking free drive function cannot be switched on (→ Page 256).

Switching the hydraulic auxiliary drive on/off

Requirements

- The vehicle has been started.
- The vehicle speed is less than 60 km/h.
- the hydraulic fluid has reached operating temperature.
- a gear is engaged.
- the rocking free drive function is switched off.
- there is no fault that impairs safety or function.

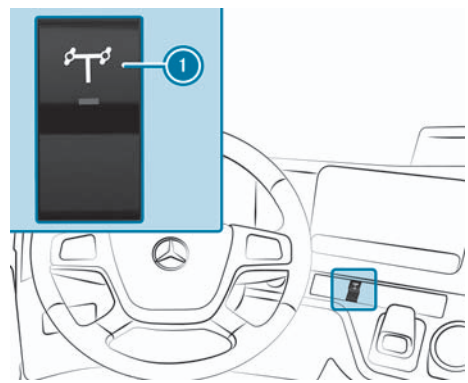

1 Hydraulic auxiliary drive button

The hydraulic auxiliary drive is only engaged actively and as required when the following driving systems are switched off:

- Cruise control (→ Page 278)
- Proximity Control Assist (→ Page 281)

When the cruise control or Proximity Control Assist is switched on, the hydraulic auxiliary drive switches to standby mode.

► Vehicles with a gross combination weight greater than 40 t: In particularly challenging driving conditions, select the manual drive program to avoid unwanted gear shifting operations and interruptions to tractive power (→ Page 251).

Deactivating

► Press the button .

◁ If the indicator lamp in the button flashes, the activation conditions (e.g. the hydraulic oil temperature) have not been met.

The hydraulic auxiliary drive is automatically activated as soon as the following activation conditions are met:

- the service brake is released.
- The vehicle speed is less than 15 km/h.

- the accelerator pedal is depressed.

If the activation conditions are met, the indicator lamp in the button [ ] lights up and the indicator lamp [ ] in the instrument cluster lights up white. The hydraulic auxiliary drive is in standby mode.

When the front axle is driven, the indicator lamp [ ] in the instrument cluster lights up blue.

Deactivation

► Press the button [ ].
  ◁ The hydraulic auxiliary drive is switched off. The indicator lamp in the button [ ] and the indicator lamp [ ] in the instrument cluster go out.

The hydraulic auxiliary drive is automatically switched off in any one of the following cases:

- the vehicle speed of 60 km/h is exceeded.
- the hydraulic oil temperature deviates from the permissible operating temperature.
- The vehicle is switched off.
- there is a fault that impairs safety or function.

Checking the oil level of the hydraulic auxiliary drive

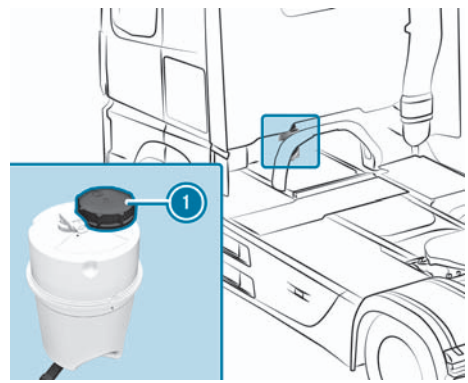

Before starting the journey, the hydraulic system's oil level should be checked when cold at an oil temperature of approximately 20°C.

► Park the vehicle on a level surface and apply the parking brake.
► Switch off the vehicle.
► Turn the cap (1) anti-clockwise and remove it.
► Pull out the oil dipstick, wipe it with a clean, lint-free cloth and reinsert it.
► Pull out the oil dipstick again, check the oil level and correct if necessary.
► Slide in the oil dipstick, put on the cap and tighten it as far as it will go.

Cleaning the radiator/fan of the hydraulic auxiliary drive

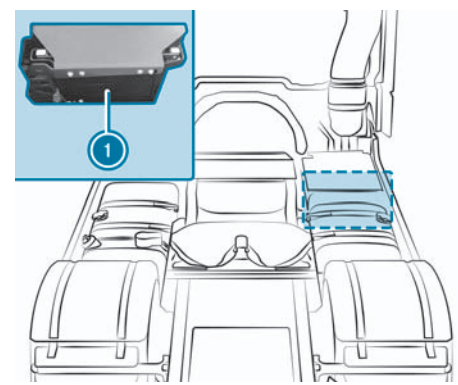

Clean the radiator (1) and its fan regularly to avoid malfunctions.

Note

Observe the instructions for external cleaning (→ Page 415).

- Clean the radiator ⓘ and the blades with a jet of compressed air, steam or water. Guide the cleaning jet parallel to the radiator fins and against the airflow direction.
- After cleaning, dry the air side of the radiator with compressed air.

Driving systems

Reversing camera

Reversing camera function

The reversing camera is only an aid. It is not a substitute for your attention to your surroundings. The responsibility for safe manoeuvring and parking remains with you. When manoeuvring and parking, make sure that there are no persons, animals, or objects in the manoeuvring area. You could otherwise endanger yourself and others.

The reversing camera cannot replace a safety officer or signaller. When manoeuvring or parking, always seek assistance from a safety officer or signaller.

When reverse gear is engaged, the image from the reversing camera is automatically shown on the multimedia system display. It is then not possible to change the display manually.

Note

Ifa coupled semitrailer/trailer has been detected, you can change the display manually.

If the display shows only a black, grey, or blue image instead of the image from the reversing camera, the reversing camera has a malfunction. In this case, have the reversing camera checked at a qualified specialist workshop.

You can also open the image of the reversing camera manually in the multimedia system under the Camera menu.

You can set the screen brightness in the multimedia system (→ Page 182).

System limits

In the following situations, the reversing camera only has limited function, or does not function at all:

- The weather conditions are poor, e.g. heavy rain, snow, fog, storm, or spray.
- The light conditions are poor, e.g. at night, or there is glare.
- The surroundings are illuminated with fluorescent light, e.g. fluorescent lamps or LED lighting. The display may flicker.
- The camera lens is covered, dirty or fogged up. Observe the notes on cleaning the reversing camera (→ Page 421).
- The camera or the rear of the vehicle is damaged. In this case, have the camera, its position, and setting checked at a qualified specialist workshop.

Do not use the reversing camera in these situations. You may injure others or collide with objects when parking.

Note

The contrast of the display may be impaired by incident sunlight or other light sources, e.g. when you are driving out of a garage. In these cases, be particularly attentive.

Note

If the display's usability is significantly restricted, e.g. in the event of pixel errors, have it repaired or replaced.

Limiter

Overview of the limiter

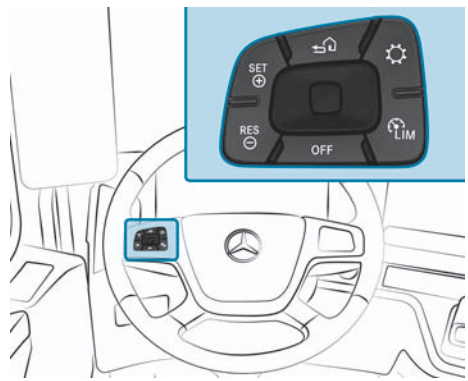

Limiter

LIM	Short button press: Select cruise control (→ Page 278) or Proximity Control Assist (→ Page 281)
	Long button press: Selecting the limiter
SET	Activates and sets the current speed limitation, increases the set speed limitation
RES	Activates and shows the stored speed limitation, decreases the set speed limitation
OFF	Deactivating the limiter

The LIM symbol in the instrument cluster shows the status of the limiter in colour:

- Grey symbol: The limiter is selected, but not engaged.
- White symbol: The limiter is engaged and restricts the vehicle speed to the limit speed you set.

Activating and deactivating the limiter

Select the limiter

The limiter restricts the vehicle speed to the set limit speed. You can accelerate the vehicle up to the limit speed using the accelerator pedal. In order to keep the set limit speed on downhill slopes, the limiter automatically brakes the vehicle with the continuous brake. If the set speed is exceeded, the LIM symbol will flash in the instrument cluster. If you cannot switch on the limiter, the instrument cluster shows the display message – – – km/h in grey.

► Press and hold the button for LIM.

◁ The instrument cluster shows the LIM symbol in grey.

Activation while driving

► Select the limiter.
► Drive at the desired speed and briefly press the SET button.
◁ The limiter is activated and the current vehicle speed is stored as the limit speed.

or

► Briefly press the RES button.
◁ The limiter is activated and adopts the stored limit speed. The instrument cluster displays the symbol LIM and the set speed limit in white.

Increasing or decreasing the limit speed

You can change the settings of the limit speed while driving.

► Activate the limiter.
► **In 1 km/h increments:** Press the RES or SET button briefly until the desired speed is displayed in the instrument cluster.

or

► Press and hold the RES or SET button until the desired speed is displayed in the instrument cluster.

Driving

You can exceed the set limit speed, e.g. when overtaking.

► Briefly depress the accelerator pedal beyond the pressure point (kick-down).
◁ The set limit speed is still shown and the LIM symbol flashes in the instrument cluster.
► When overtaking is complete, briefly release the accelerator pedal and depress it again.
◁ The limiter again restricts the vehicle speed to the set limit speed.

Deactivation

The limit speed remains stored if you deactivate the limiter.

► Press the button OFF.
◁ The instrument cluster shows the LIM symbol in grey.

or

► Using the LIM button, select cruise control or the Proximity Control Assist.
◁ The instrument cluster shows the symbol or symbol and the set speed in grey.

Cruise control

Overview of cruise control

Danger

Risk of accident due to unknown stored speed

If you call up the stored speed and it differs from the current speed, the vehicle will accelerate or brake.

If you do not know the stored speed, the vehicle may accelerate or brake unexpectedly.

- ► Take the traffic situation into account before calling up the stored speed.
- ► If the stored speed is not known, store the desired speed again.

Note

Engine damage due to excessively high engine speed

If you drive in the overspeed range, you will damage the engine.

- ► Do not drive in the overspeed range.

Do not use cruise control in the following situations:

- if the traffic conditions do not allow you to drive at a constant speed (e.g. in heavy traffic or on winding roads)
- if the drive wheels could lose traction on slippery roads, e.g., when braking or accelerating
- if there is poor visibility, e.g. due to fog, heavy rain or snow

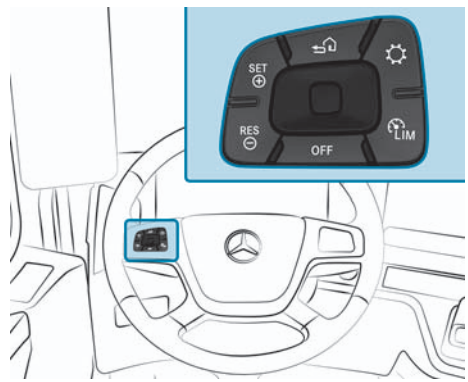

Cruise control

LIM	Short button press: Selects cruise control/Proximity Control Assist Long button press: Selecting the limiter
SET	Activates and sets the current speed limitation, increases the set speed limitation
RES	Activates and shows the stored speed limitation, decreases the set speed limitation
OFF	Deactivates cruise control

The symbol in the instrument cluster shows the status of cruise control by colour:

- Grey symbol: Cruise control has been selected, but not activated.
- White symbol: Cruise control has been activated and maintains the set speed.

Activating and deactivating cruise control

Selecting cruise control

Cruise control maintains the set vehicle speed on your behalf. If the set speed is exceeded on downhill gradients by more than the set speed tolerance, the continuous brake is applied automatically.

If you are driving slower than 15 km/h, cruise control cannot be activated.

If you cannot switch on the cruise control, the instrument cluster shows the display message – – – km/h in grey.

Cruise control is automatically deactivated in the following situations, if:

- you are driving at less than 10 km/h.

- you shift the transmission into neutral for more than five seconds.

If cruise control is deactivated automatically, an acoustic signal sounds.

► Press the button [LIM] repeatedly until the instrument cluster displays the symbol [ ] in grey.

Activation while driving

► Select cruise control.

► Drive at the required speed and briefly press the [SET] button.

◁ Cruise control is activated, and the current speed is set.

or

► Briefly press the [RES] button.

◁ Cruise control is activated and adopts the stored speed.

◁ The instrument cluster displays the [ ] symbol and the set speed in white.

► Release the accelerator pedal.

◁ In order to maintain the set speed, cruise control automatically brakes or accelerates the vehicle.

Increasing and reducing the speed

When cruise control is active, you can change the speed setting while driving.

► **To adjust in 0.5 km/h increments:** Press [RES] or [SET] button repeatedly until the desired speed is shown in the instrument cluster.

or

► **To adjust in 5 km/h increments:** Press and hold the [RES] or [SET] button until the desired speed is displayed in the instrument cluster.

Driving tips

In the A economy and A fleet drive programs, cruise control maintains the set speed less forcefully. This explains why the vehicle speed and the set speed may differ slightly under certain circumstances. In the A economy and A fleet drive programs, you can set the speed to a maximum of 85 km/h. In the A economy + drive program, the speed can be set to a maximum of 82 km/h. In the A economy and A economy + drive programs, you can exceed the set speed by depressing the accelerator pedal, e.g. when overtaking.

You can use the continuous brake to decelerate. Cruise control remains activated.

If you reset the continuous brake lever, but do not deactivate it, the vehicle will only accelerate on downhill slopes up to the set speed.

If the continuous brake is deactivated, the vehicle will accelerate to the last stored speed.

If cruise control is decelerating the vehicle using the continuous brake and you simultaneously depress the brake pedal, cruise control remains activated.

If the braking power from the continuous brake is insufficient:

► Shift down a gear and reduce your speed.

◁ If you shift down on a downhill slope without adjusting the

speed, cruise control sets an engine speed lower than the engine overspeed. The set speed remains set and is automatically re-established as soon as this is possible in a higher gear.

The vehicle is braked by the continuous brake automatically in the following situations:

- Cruise control is activated.
- The vehicle speed exceeds the set speed by more than the upper speed tolerance.

When the continuous brake is activated and you activate cruise control, the continuous brake regulates the set speed on downhill slopes.

Overtaking

It is possible to exceed the set speed, e.g. when overtaking.

► Depress the accelerator pedal.

► Once the overtaking manoeuvre is finished, release the accelerator pedal again.

◁ Cruise control adjusts the vehicle's speed to the set speed.

Deactivation

The speed remains stored if you deactivate cruise control.

► Press the button OFF.

or

► When cruise control accelerates the vehicle, depress the brake pedal.

◁ The instrument cluster shows the symbol and the set speed in grey.

or

► Press and hold the LIM button to select the limiter.

◁ The instrument cluster shows the LIM symbol in grey.

or

► Select Proximity Control Assist with the LIM button.

◁ The instrument cluster displays the symbol and the set speed in white. Proximity Control Assist is activated.

Proximity Control Assist

Overview of Proximity Control Assist

Danger

Risk of accident due to the Proximity Control Assist's detection limitations

Proximity Control Assist does not react:

- to pedestrians or animals
- to oncoming vehicles or cross traffic

Proximity Control Assist is therefore unable to issue a warning or intervene in these situations.

► Always carefully observe the traffic conditions and be ready to brake at all times.

Note

Proximity Control Assist reacts to obstacles on the carriageway, e.g. stationary or parked vehicles that have been detected by the camera and the radar sensor only up to a speed of 50 km/h.

Danger

Risk of accident due to Proximity Control Assist's detection limitations

Proximity Control Assist cannot always clearly identify other road users and complex traffic situations.

In these cases, Proximity Control Assist may unexpectedly accelerate or brake the vehicle and intervene unexpectedly.

► Drive on carefully and be ready to brake, particularly if Proximity Control Assist issues a warning.

Danger

Risk of accident if Proximity Control Assist does not decelerate sufficiently

Proximity Control Assist only brakes your vehicle with part of the maximum possible braking power. If this deceleration is not sufficient, Proximity Control Assist will give you a visual warning.

► Apply the brakes yourself in these situations, and try to take evasive action.

► Observe the notes on particular driving situations under "Active Brake Assist" (→ Page 300).

Proximity Control Assist has been developed for journeys on motorways and high-speed major roads. The system is not intended for use in urban traffic, for example.

Do not use Proximity Control Assist when towing or using the vehicle as a work machine.

The system may be impaired or may not function in the following situations:

- If visibility is poor, e.g. due to insufficient road illumination or due to snow, rain, fog or heavy spray
- If there is glare, e.g. from oncoming traffic, direct sunlight or reflections (e.g. if the road surface is wet)
- if the windscreen in the area of the camera is dirty, misted up or damaged
- If the windscreen around the camera is obscured, e.g. due to a defective windscreen wiper or a sticker
- if the carriageway is very narrow and winding
- If the radar sensor is impaired due to interference from other radar sources, such as strong radar reflections in car washes

Proximity Control Assist may not detect narrow vehicles driving in front, e.g. motorcycles or vehicles not travelling in line with your vehicle.

The following driving situations in particular should be noted:

- Cornering, entering and exiting bends
- Your own vehicle driving on a different line or vehicles in front of you driving on a different line
- The loads of vehicles in front that protrude into the lane
- Other vehicles changing lane
- Vehicles turning off
- Overtaking
- Winding stretches of road
- Obstacles and stationary vehicles

► Regularly clean the distance sensor cover and the window in the camera's field of view (→ Page 421).

If the distance sensor cover or the windscreen in the camera's field of vision is dirty or icy, its functionality may be impaired.

► Deactivate Proximity Control Assist before leaving the driver's seat and secure the vehicle using the parking brake.

Proximity Control Assist must not be used in the following cases:

- On slippery roads. The drive wheels may lose their grip when braking or accelerating and the vehicle may skid.
- when there is poor visibility, e.g. due to fog, heavy rain, or snow.
- In cities and on country roads.

If Proximity Control Assist no longer detects a vehicle driving in front because it has turned off the road, for example, Proximity Control Assist may accelerate to the set (stored) speed. On a filter lane or a slip road, this speed may be too high.

If the vehicle is equipped with PPC (Predictive Powertrain Control) (→ Page 288), the distance to the vehicle in front can be increased when PPC is intervening, e.g. before lowering. This is intended to help achieve an efficient driving style.

The icon in the instrument cluster shows the Proximity Control Assist status by colour:

- Grey symbol: Proximity Control Assist is selected, but not activated.
- White symbol: Proximity Control Assist is activated, but a vehicle in front has not been detected.
- White icon and vehicle within the blue icon: Proximity Control Assist is activated and a vehicle in front has been detected.

If a vehicle ahead has been detected, the instrument cluster additionally displays its driving speed and the distance to the detected vehicle.

Note

The Assistance menu in the instrument cluster also shows the vehicle speed of the detected vehicle and the distance to the detected vehicle.

Activate and deactivate Proximity Control Assist

Functions and activation conditions

Proximity Control Assist controls the speed and assists you in automatically maintaining the distance from a vehicle detected in front. If there is no vehicle in front of you, Proximity Control Assist works like cruise control from a speed of 15 km/h.

If a vehicle is detected in front, it will function from a speed of 0 km/h.

Note

The maximum adjustable speed depends on the selected drive program, as with cruise control (→ Page 251).

If Proximity Control Assist detects a vehicle in front driving at a slower speed, your vehicle is slowed and the specified distance selected by you is maintained.

Proximity Control Assist brakes the vehicle with the continuous brake in the following situations:

- The vehicle exceeds the set speed, including the set speed tolerance, e.g. on downhill slopes.
- A slower vehicle in front has been detected.

When the continuous brake slows the vehicle, the indicator lamp in the instrument cluster lights up.

Proximity Control Assist may also brake the vehicle using the service brake in order to maintain the specified distance.

If the vehicle in front is no longer detected, e.g. if it changes lane, your vehicle will accelerate up to the set speed.

Proximity Control Assist cannot be activated or is deactivated automatically in the following situations:

- if you are driving at under 15 km/h on roads with downhill or uphill gradients of over 10%.
- if you are driving at under 5 km/h and no vehicles are detected in front of you.
- if you shift the transmission into neutral for more than approximately five seconds.
- if you depress the brake pedal while Proximity Control Assist accelerates the vehicle.
- if you select the reverse gear.
- if the vehicle is stationary and you leave the driver's seat.
- if the vehicle is stationary and you open the driver's door.
- if an implement is detected that impairs the function of the distance sensor or the multifunction camera's view.
- if there is a fault in the brake system/electronic management system.
- if the distance sensor initialisation is not yet complete.

If Proximity Control Assist is deactivated automatically, an acoustic signal sounds.

If you cannot switch on Proximity Control Assist, the instrument cluster shows the display message – – ,– km/h in grey.

Proximity Control Assist remains activated in the following situations:

- if you brake using the continuous brake.
- if Proximity Control Assist decelerates the vehicle using the continuous brake or service brake and you simultaneously depress the brake pedal.

Select Proximity Control Assist

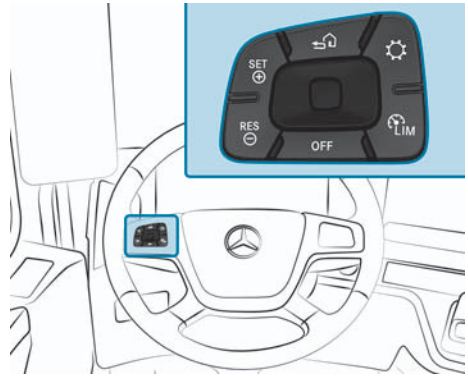

Proximity Control Assist

LIM	Short button press: Select Proximity Control Assist/cruise control Long button press: Selecting the limiter
SET	Activates and sets the current speed limitation, increases the set speed limitation
RES	Activates and shows the stored speed limitation, decreases the set speed limitation
OFF	Deactivate Proximity Control Assist

► Press the LIM button repeatedly until the instrument cluster displays the symbol in grey.

If you switch from cruise control to Proximity Control Assist and it was previously on, the instrument cluster displays the symbol in white. Proximity Control Assist is activated. The vehicle adapts its speed to that of the vehicle in front, but only up to the desired and set speed.

Activation while driving

At speeds below 15 km/h, you can only activate Proximity Control Assist if a vehicle in front has been detected.

► Drive at a speed greater than 15 km/h.

► Select Proximity Control Assist.

► Briefly press the SET button.

◁ Proximity Control Assist is activated and the current speed is set.

or

► Briefly press the RES button.

◁ Proximity Control Assist is activated and the last stored speed is

set. The instrument cluster displays the [symbol] symbol and the set speed in white.

- ► Release the accelerator pedal.
  - ◁ The vehicle adapts its speed to that of the vehicle in front, but only up to the desired and set speed.

Activating when the vehicle is stationary

When the vehicle is stationary, you can only activate Proximity Control Assist if a vehicle in front has been detected.

- ► Apply the electronic parking brake or apply the service brake.
- ► Select Proximity Control Assist.
- ► Briefly press the [RES] button.
  - ◁ Proximity Control Assist is activated and the last stored speed is set. The instrument cluster displays the [symbol] symbol and the set speed in white.
- ► Release the electronic parking brake or the service brake.
  - ◁ Proximity Control Assist prevents the vehicle from rolling away.

If you switch off the vehicle when it is stationary, the electronic parking brake is automatically set.

Pulling away and stopping the vehicle

Moving off

The moving-off function of Proximity Control Assist provides assistance when driving in traffic jams. Your vehicle pulls away automatically after a standstill within two seconds if the vehicle in front drives on.

In order for the vehicle to pull away automatically, the following conditions must be fulfilled:

- The vehicle in front of you must drive on or already be more than 10 m away.
- The forward gear must be engaged.
- The continuous brake must be deactivated.
- The electronic parking brake and the service brake must be released.

- ► To move on, briefly depress the accelerator pedal.

or

- ► Press the button [RES].
  - ◁ The vehicle pulls away and adapts its speed to that of the vehicle in front, but only up to the desired and set speed.

To move on in vehicles with a turbo retarder clutch, you must depress the accelerator pedal permanently in order to complete the moving-on procedure.

Stopping

Danger

Risk of accident if the driver's seat is vacated with Proximity Control Assist active

If the vehicle is only braked by Proximity Control Assist when you leave the driver's seat, it may roll away in the following situations:

- If there is a malfunction in the system or in the power supply

- If Proximity Control Assist is switched off, e.g. by a vehicle occupant or from outside the vehicle
- If the accelerator pedal is pressed, e.g. by a vehicle occupant
- If the button [RES] is pressed, e.g. by a vehicle occupant.

► Before the driver leaves the driver's seat, always switch off Proximity Control Assist and secure the vehicle to prevent if from rolling away.

If Proximity Control Assist detects that the vehicle in front has stopped, it will brake your vehicle to a standstill. Depending on the specified distance set, your vehicle will come to a standstill at a sufficient distance behind the vehicle in front.

Increasing or reducing the speed

You can only change the speed setting while driving.

► **To adjust in 0.5 km/h increments:** Press [RES] or [SET] button repeatedly until the desired speed is shown in the instrument cluster.

or

► **To adjust in 5 km/h increments:** Press and hold button [RES] or [SET] until the desired speed is displayed on the instrument cluster.

Note

By setting the speed tolerance, you define by how much the set speed may be exceeded (→ Page 290).

Setting a specified distance to the vehicle in front

The specified distance for Proximity Control Assist can be set to five levels. After a vehicle start, the average target distance is automatically set.

► Make sure that you maintain the minimum distance to the vehicle in front as required by law. Adjust the specified distance to the vehicle in front if necessary.

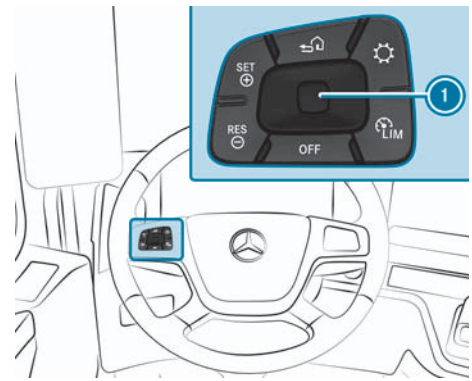

► Press the [⚙] button to open the specified distance display in the instrument cluster.

► Swipe the (1) button to change the specified distance: Swipe bottom to top to increase the specified distance. Swipe top to bottom to reduce the specified distance.

◁ The bar display shows the specified distance you have selected.

Overtaking

It is possible to exceed the set speed, e.g. when overtaking:

- ► Maintain a sufficient distance to the vehicle in front.
- ► Depress the accelerator pedal.
- ► Once the overtaking manoeuvre is finished, release the accelerator pedal again.
  - ◁ Proximity Control Assist adjusts the speed to the set speed.

Deactivating

The speed remains stored if you deactivate Proximity Control Assist.

- ► Press the button OFF.

or

- ► When Proximity Control Assist accelerates the vehicle, depress the brake pedal.
  - ◁ The instrument cluster shows the symbol and the set speed in grey.

or

- ► Select the limiter with the LIM button.
  - ◁ The instrument cluster shows the LIM symbol in grey.

or

- ► Using the LIM button, select the cruise control (→ Page 279).
  - ◁ The instrument cluster displays the symbol and the set speed in white. Cruise control is activated.

Observe the conditions that lead to automatic deactivation of Proximity Control Assist.

PPC (Predictive Powertrain Control)

Notes on PPC (Predictive Powertrain Control)

Danger

Risk of accident despite route-based speed adaptation

Route-based speed adaptation may be faulty or temporarily unavailable in the following situations:

- if the driver does not follow the predetermined route
- if the map data is not up to date or unavailable
- in roadworks
- in poor weather and road conditions
- if the accelerator pedal is depressed
- if there are electronically displayed speed limits

- ► Adapt your speed to the traffic situation.

The driver is always responsible for choosing the right speed and observing other road users. This applies in particular to junctions, roundabouts, and traffic lights, as route-based speed adaptation does not brake the vehicle to a standstill.

PPC is intended for use on motorways and trunk roads. Do not use PPC within towns and in heavy traffic.

PPC

PPC uses topographical map data to optimise fuel consumption and adjust performance according to driving conditions.

PPC influences the gear selection and adjusts the speed in the cruise control (→ Page 278) or Proximity Control Assist (→ Page 281).

The following route events are taken into account by PPC:

- Speed adaptation facilitates better utilisation of momentum on downhill gradients.
- On uphill gradients, the power output is optimised and may be reduced before reaching the top of the hill.

You can switch PPC on and off in the multimedia system in the Functions menu, Assistance systems menu item.

PPC Interurban

PPC Interurban uses map data to react to route events. By reducing power output in good time prior to route events, coasting can be used to save fuel.

The following route events are taken into account by PPC Interurban:

- PPC sets the cruise control speed in advance to suit the speed limit ahead. The driver can subsequently adjust the cruise control speed.
- PPC Interurban uses data on bends, roundabouts, traffic signs and junction situations to calculate a suitable speed.

You can switch consideration of these route events on and off in the multimedia system independently of each other in the Functions menu, Assistance systems menu item.

PPC is active when the following conditions are met:

- PPC has been activated in the Settings menu.
- Cruise control or Proximity Control Assist is active.
- GPS signal is available.
- Map data is available.

PPC is restricted in the following situations:

- The transmission is in the manual drive program.
- You step on the accelerator or brake pedal.
- The continuous brake is active.
- Proximity Control Assist brakes the vehicle.
- The power take-off is engaged.
- Automatic speed adaptation is active.

The status of PPC is displayed in the instrument cluster as follows:

- Grey symbol : Cruise control is deactivated.
- White symbol without PPC display: Cruise control is active but PPC is unavailable or deactivated.
- White symbol with PPC display: PPC is activated and cruise control is active.
- Green symbol with PPC display: PPC actively controls the speed and gear selection in cruise control or Proximity Control Assist.

System limits

Route-based speed adjustment does not take right-of-way regulations into account in every situation. The driver is responsible for complying with road traffic regulations and driving at a suitable speed.

In difficult conditions (e.g. unclear road conditions, narrow lanes, wet conditions, snow or ice) or when driving with a trailer, the speed selected by the system may not always be suitable to the situation. In these situations the driver must intervene accordingly.

If the gross vehicle weight is more than 80 t and power take-offs are operated during the trip, this can result in a malfunction of PPC in certain situations. In this case, PPC must be deactivated.

Setting PPC (Predictive Powertrain Control)

Activating/deactivating

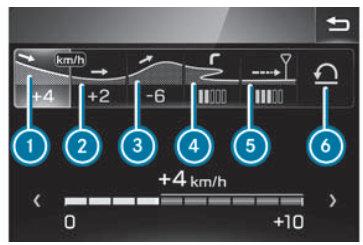

- In the multimedia system in the Functions ▶▶ Assistance systems menu switch PPC on/off.

Setting speed tolerances and factors

- Press the button ⚙ on the multifunction steering wheel repeatedly until the input window Cruise control is displayed in the instrument cluster.
- Change back and forth between the setting options by swiping left or right using the middle steering wheel button on the left-hand control panel.
- Swipe down to select a setting option.
- Set the speed tolerances and factors by swiping left or right.

Setting the upper speed tolerance

- Select menu item ① to set the upper speed tolerance.
  - ◁ The speed tolerance changes in 1 km/h increments from 2 km/h to 10 km/h.

The suggested value for the upper speed tolerance is at least 4 km/h. If the suggested value is not confirmed by the driver, the upper speed tolerance is set to the factory setting (2 km/h).

The higher you set the upper speed tolerance, the greater the savings in fuel.

If cruise control is activated and the set speed is 50 km/h or less, the upper speed tolerance is set to 2 km/h.

Setting momentum peaks

- To set momentum peaks, select menu item ②.

◁ The speed tolerance changes in 1 km/h increments from 1 km/h to 4 km/h.

The suggested value for the momentum peak is at least 2 km/h. If the suggested value is not confirmed by the driver, the momentum peak is set to the factory setting (1 km/h).

The higher you set the momentum peak, the greater the savings in fuel.

If cruise control is activated and the set speed is 50 km/h or less, the momentum peak is set to 0 km/h.

Setting the lower speed tolerance

► Select menu item ③ to set the lower speed tolerance.
◁ The speed tolerance changes in 1 km/h increments from -1 km/h up to -10 km/h. Factory setting is -6 km/h.

The higher you set the lower speed tolerance, the greater the savings in fuel.

Setting the cornering speed factor

► Select the ④ menu item to set the cornering speed factor.
◁ The speed factor changes in five levels. The factory setting is level three.

The higher the level set, the higher the vehicle speed when cornering.

Setting deceleration before a route event

► Select the ⑤ menu item to set the start of deceleration.
◁ The start of deceleration changes in five levels. The factory setting is level three.

The higher the level is set, the earlier the vehicle starts deceleration before a route event.

Resetting the settings

► Select menu item ⑥ to reset all the settings to the factory settings.

Frontguard Assist

Notes on Frontguard Assist

Frontguard Assist can inform the driver about pedestrians or cyclists who are standing or moving in front of the vehicle and warn the driver.

① Monitoring range (example)

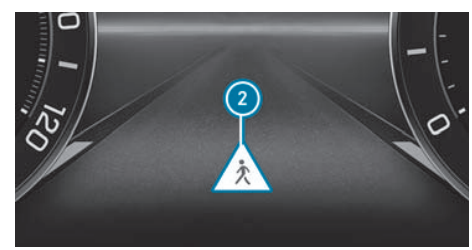

② Display in instrument cluster (example)

Persons in the monitoring range – Info

When detecting a pedestrian or cyclist within the sensors' monitoring range, the system informs the driver by a display on the indicator lamp in the instrument cluster.

When the vehicle is switched on, the display is active from standstill up to a speed of 15 km/h (forward travel).

Persons in the monitoring range – warning

If the system detects a pedestrian or cyclist within the sensors' monitoring range and classifies the situation as critical, it warns the driver by displaying the red indicator lamp in the instrument cluster. An acoustic warning also sounds.

While the system issues an audible warning, the audio equipment installed ex works and the hands-free system are muted.

The warning is active when driving forwards from vehicle start-up to a vehicle speed of 15 km/h.

If the driver depresses the accelerator pedal beyond the pressure point (kick-down), the colour of the indicator lamp in the instrument cluster changes from red to yellow and the audible warning goes out.

The indicator lamp in the instrument cluster goes out in the following scenarios:

- The detected pedestrian or cyclist is no longer within the monitoring range of the sensors.
- The pedestrian or cyclist is no longer detected by the sensors.
- The distance to the detected pedestrian or cyclist is no longer evaluated as critical by the system in conjunction with the vehicle speed.

System limits

Warning

Risk of accident due to limited detection capability of Frontguard Assist

Frontguard Assist cannot always clearly identify objects and complex traffic situations.

In these cases, Frontguard Assist may provide information without reason and/or not issue any warnings.

▶ Always carefully observe the traffic conditions and be ready to brake at all times.

The system may be impaired or may not function in the following situations in particular:

- if the sensors are dirty, covered with ice, or obscured, for example, due to snow or heavy spray
- if the radar sensors are impaired due to interference, for example, from strong or disruptive radar reflections

caused by crash barriers or other infrastructure
- if the windscreen in the area of the camera is dirty, misted up or damaged
- if the windscreen in the area of the camera is obscured, for example, due to a faulty windscreen wiper or a sticker

Frontguard Assist may not react correctly in the following situations in particular:
- If pedestrians or cyclists move quickly into the sensors' monitoring range
- On bends with tight radii
- To pedestrians or cyclists who are obscured by other objects
- if the contour of a pedestrian does not stand out from the background
- if pedestrians or cyclists are no longer detected as such, e.g. due to special clothing or other objects
- where pedestrians or cyclists are in a tunnel

at very low vehicle speeds (e.g. when the vehicle crawls), the system must not issue a warning despite a critical situation.

Automatic deactivation of Frontguard Assist

If Frontguard Assist is malfunctioning or has been automatically deactivated due to a device being used, the yellow indicator lamp in the instrument cluster comes on. No information is then provided about objects in the monitoring range and no warning is issued by Frontguard Assist. In the event of a malfunction, have the system checked at a qualified specialist workshop.

Activating/deactivating Frontguard Assist warning

When you start the vehicle, Frontguard Assist's visual and acoustic warning is automatically activated.

Note

The info display in the instrument cluster (indicator lamp) cannot be switched off.

- **Switching off:** In the multimedia system in the Functions ▶▶ Assistance systems menu, switch off Frontguard Assist.
  - ◁ Frontguard Assist's visual and audible warning is switched off.
- **To switch on:** In the multimedia system in the Functions ▶▶ Assistance systems menu switch on Frontguard Assist.
  - ◁ Frontguard Assist's visual and audible warning is switched on.

Active Brake Assist 6

Notes on Active Brake Assist 6

General notes

Active Brake Assist can have the following effects:

- Ideally avoid a collision with the vehicle in front.
- Reduce the danger of a collision with the vehicle in front or a stationary obstacle in the path of your vehicle.
- Reduce the consequences of a collision with the vehicle in front.
- Drivers are able to react to pedestrians and cyclists with partial braking and full-stop braking.

If Active Brake Assist detects the risk of a rear-end collision, a warning tone sounds and the instrument cluster shows the indicator lamp for vehicles or for pedestrians or cyclists.

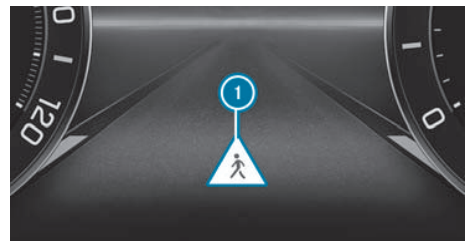

1 Display in the instrument cluster (example: pedestrian)

f you do not react to the visual and audible warnings when a vehicle is detected and the danger persists, partial braking intervention will be initiated.

If a pedestrian/cyclist is detected, partial braking is initiated at the same time as the visual and acoustic warning.

If you do not react to the partial brake application and the danger persists, Active Brake Assist automatically initiates emergency braking.

System limits

Full system performance is not yet available for a few seconds after switching on the vehicle or after driving off.

Active Brake Assist may be impaired or may not function in the following situations in particular:

- in snow, rain, fog or heavy spray
- if the carriageway is very narrow and winding
- if the radar sensors are impaired due to interference from other radar sources, such as strong radar reflections in car washes
- if there is glare, e.g. from oncoming traffic, direct sunlight, greatly varying light conditions, or reflections (e.g. if the road surface is wet)
- if the windscreen in the area of the camera is dirty, obscured, or damaged, for example, due to a faulty windscreen wiper or a sticker
- at very low speeds (e.g., when the vehicle is creeping)

Note

Following delivery of the vehicle, over the course of a certain distance, the Active Brake Assist sensors adjust automatically. During this teach-in process, Active Brake Assist is not available or available only to a limited extent.

In some circumstances, particularly those listed below, Active Brake Assist does not react correctly:

- to pedestrians or vehicles if they move quickly into the sensor detection range
- on bends with tight radii
- if the load of the vehicle in front protrudes into the lane in which you are driving.
- to pedestrians who are obscured by other objects
- to contours of a pedestrian, who does not stand out from the background
- if a pedestrian is no longer detected as such, for example, due to special clothing or other objects
- to pedestrians in a tunnel

The Active Brake Assist can only react to pedestrians up to a speed of 60 km/h.

Danger

Risk of accident due to Active Brake Assist's limited detection capabilities

Active Brake Assist cannot always clearly identify objects and complex traffic situations.

In such cases, Active Brake Assist may:

- issue an unnecessary warning and brake the vehicle
- possibly not issue a warning or intervene

Active Brake Assist is not a substitute for you paying attention to your surroundings and does not relieve you of your responsibility pertaining to road traffic law, in particular in relation to maintaining a safe distance, your speed, and braking in good time.

- ► Always pay careful attention to the traffic situation.
- ► Be prepared to brake or swerve if necessary.

Danger

Risk of accident due to Active Brake Assist's detection limitations

Active Brake Assist does not react:

- to oncoming vehicles
- to animals

Active Brake Assist is therefore unable to issue a warning or intervene in these situations.

- ► Always carefully observe the traffic conditions and be ready to brake at all times.

Note

Active Brake Assist can also react to pedestrians or cyclists who are coming towards you or are moving at the edge of the road.

Active Brake Assist cannot override physical limits.

- ► Always adapt your driving style to the current road and weather conditions.

The following vehicles in particular may not be detected by Active Brake Assist:

- narrow vehicles
- motorcycles
- vehicles not travelling in line with your vehicle

► Please read the information on special driving situations that may lead to system limitations (→ Page 300).

Active Brake Assist may unexpectedly issue warnings or brake your vehicle in the following situations in particular:

- in car washes
- if there are stationary obstacles inside a tunnel
- on ferries
- in loading areas
- at toll gates
- in workshops

Critical driving situations are described as:

- situations with an imminent collision with the vehicle in front
- situations with imminent collision with a pedestrian or cyclist

The following may lead to Active Brake Assist having no reaction in critical driving situations:

- Active Brake Assist has not recognised the danger of the situation.
- Active Brake Assist is deactivated.
- Active Brake Assist has failed.
- Active Brake Assist is suppressed.

Cancelling an Active Brake Assist brake application

Due to technical and physical system limits, Active Brake Assist may warn the driver visually and acoustically, or may initiate a partial or emergency braking intervention although no critical driving situation is present.

You can suppress a warning tone and/or an emergency braking application initiated by Active Brake Assist as follows:

- By quickly depressing the accelerator pedal significantly beyond the current position, or beyond the point of resistance (kick-down).
- By disengaging Active Brake Assist (depending on equipment) (→ Page 297).

You can only suppress an emergency braking application initiated by Active Brake Assist as follows:

- By depressing the accelerator pedal beyond the point of resistance to the kick-down position (depressing the accelerator pedal beyond the point of resistance without reaching the kick-down position is not sufficient, as opposed to the suppression of the warning tone or partial braking application described above).
- By disengaging Active Brake Assist (depending on equipment) (→ Page 297).

Please note that all suppression measures described above suppress warning tones and partial braking applications initiated by the system, also in critical driving situations. Depressing the accelerator pedal beyond the point of resistance (kick-down) or deactivating Active Brake Assist (if installed) also suppresses an

emergency braking application initiated by the system in critical driving situations. Only the visual warning remains in such cases.

If both the driving situation assessed as critical and the suppressive measure continue, a visual warning is issued and a warning tone sounds. The visual warning and brief warning tone are issued until the moment when the system would normally initiate the emergency braking application, which has, however, been suppressed due to the suppression measures. In this instance, Active Brake Assist does not initiate a partial or emergency braking application.

Notes on care

- Clean the distance sensor covers and the windscreen in the camera's field of view regularly (→ Page 421).

If the distance sensor cover or the windscreen in the camera's field of vision is dirty or icy, its functionality may be impaired.

Deactivating and activating Active Brake Assist 6

Depending on the vehicle equipment, it is possible to deactivate Active Brake Assist manually.

When you start the vehicle, Active Brake Assist is automatically activated.

If there is a malfunction in a system associated with Active Brake Assist, Active Brake Assist is automatically deactivated and the OFF indicator lamp in the instrument cluster lights up.

When the cause of the malfunction has been rectified, Active Brake Assist switches back on automatically, and the indicator lamp OFF in the instrument cluster goes out.

- **Switching off:** In the multimedia system in the Functions ▶▶ Assistance systems menu, switch off Active Brake Assist 6.
  - ◁ If Active Brake Assist was deactivated, the OFF indicator lamp will light up in the instrument cluster.

Note

If the Active Brake Assist menu item is greyed out, Active Brake Assist cannot be deactivated in your vehicle.

Note

15 minutes after manual deactivation, Active Brake Assist is automatically reactivated and the indicator lamp OFF in the instrument cluster goes out.

If an implement is detected that impairs the function of the distance sensor or the view of the multifunction camera, the system is not automatically switched on again.

- **To switch on:** In the multimedia system in the Functions ▶▶ Assistance systems menu switch on Active Brake Assist 6.
  - ◁ Once Active Brake Assist has been activated, the OFF indicator lamp in the instrument cluster will go out.

Collision warning and emergency braking

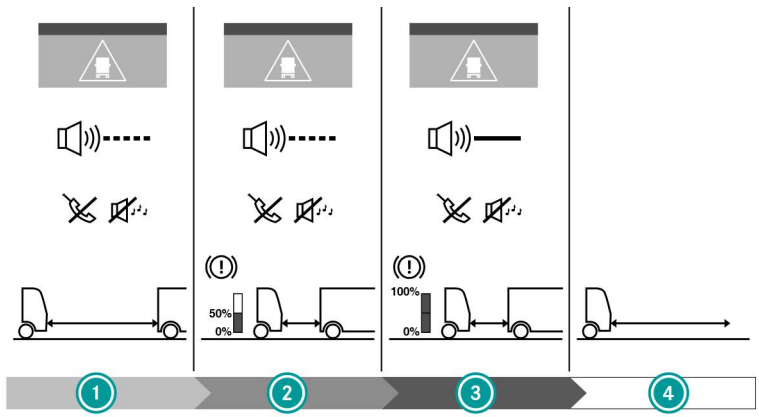

Reaction to a vehicle (example)

Collision warning and emergency braking

1. Collision warning
2. Partial braking
3. Emergency braking (maximum full-stop braking)
4. Emergency braking completed

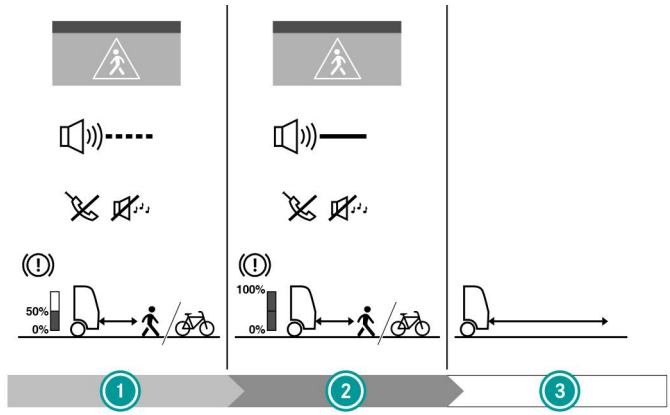

Reaction to a pedestrian /cyclist (example)

Collision warning and emergency braking

1. Collision warning with simultaneous partial braking
2. Emergency braking (maximum full-stop braking)
3. Emergency braking completed

If there is a risk of a collision with the vehicle in front and Active Brake Assist issues a warning, the audio device and hands-free system installed at the factory are automatically muted.

Collision warning

The indicator lamp lights up in the instrument cluster when a vehicle, pedestrian , or cyclist is detected. An intermittent warning tone sounds.

Partial braking

The collision warning remains active. In addition, Active Brake Assist slows the vehicle with automatic partial braking.

Emergency braking

If you do not react to the collision warnings and partial brake application, Active Brake Assist automatically initiates emergency braking (maximum full-stop braking) within the system limitations.

In addition, the ⚠ or ⚠ indicator lamp lights up in the instrument cluster and a continuous warning tone sounds.

At speeds greater than 50 km/h, rapid flashing of the hazard warning lights (emergency braking flashing) is activated during braking to warn following traffic.

After emergency braking, the instrument cluster shows the grey display message Emergency braking finished and the hazard warning light system is switched on automatically at the normal flashing frequency.

After emergency braking to a standstill, the vehicle is secured by the HOLD function to prevent it from rolling away.

If an emergency braking manoeuvre has been performed:

- ▶ Remove the vehicle from the danger area as soon as possible while paying attention to the traffic situation.
- ▶ Switch off the vehicle and use the parking brake to secure it against rolling away.
- ▶ Make sure that the vehicle is in proper working order and that the load is secured properly.

Information on specific driving situations

Cornering, entering and exiting bends

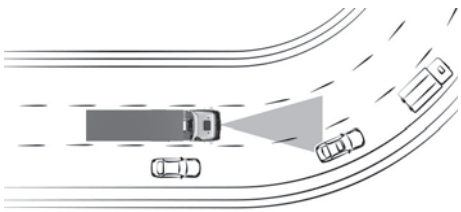

The ability of Active Brake Assist and the distance control assistant to detect vehicles on bends is limited:

- Active Brake Assist and the Proximity Control Assist may unexpectedly issue warnings or brake your vehicle.
- Active Brake Assist and the Proximity Control Assist cannot issue warnings/brake although there is a critical driving situation.
- The Proximity Control Assist may accelerate unexpectedly.

Vehicles not travelling in line with your vehicle and stationary vehicles

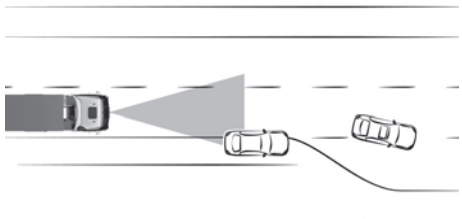

The ability of Active Brake Assist and the distance control assistant to detect vehicles not travelling in line with your vehicle or stationary vehicles is limited:

- Active Brake Assist and the Proximity Control Assist may unexpectedly issue warnings or brake your vehicle.
- Active Brake Assist and the Proximity Control Assist cannot issue warnings/brake although there is a critical driving situation.
- The Proximity Control Assist may accelerate unexpectedly.

Other vehicles changing lane

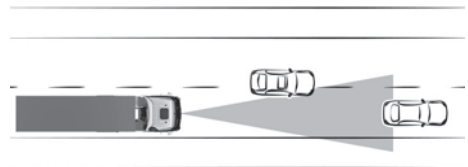

The ability of Active Brake Assist and Proximity Control Assist to detect vehicles pulling into your lane is limited:

- Active Brake Assist and the Proximity Control Assist may unexpectedly issue warnings or brake your vehicle.
- Active Brake Assist and the Proximity Control Assist cannot issue warnings/brake although there is a critical driving situation.
- The Proximity Control Assist may accelerate unexpectedly.

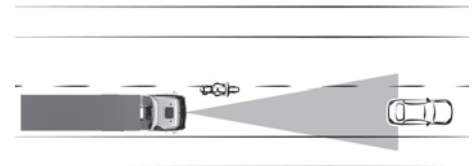

The ability of Active Brake Assist and the distance control assistant to detect vehicles pulling into your lane without maintaining a safe distance is limited. The system can only react to vehicles within the detection range of the sensors.

- Active Brake Assist and the Proximity Control Assist cannot issue warnings/brake although there is a critical driving situation.
- The Proximity Control Assist may accelerate unexpectedly.

► Brake the vehicle.

◁ The distance to the vehicle in front is increased.

Vehicles turning off

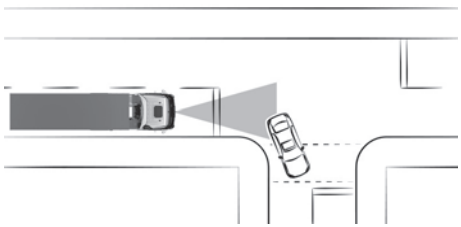

The ability of Active Brake Assist and the Proximity Control Assist to detect vehicles turning off is limited:

- Active Brake Assist and the Proximity Control Assist may unexpectedly issue warnings or brake your vehicle.
- Active Brake Assist and the Proximity Control Assist cannot issue warnings/brake although there is a critical driving situation.
- The Proximity Control Assist may accelerate unexpectedly.

Overtaking

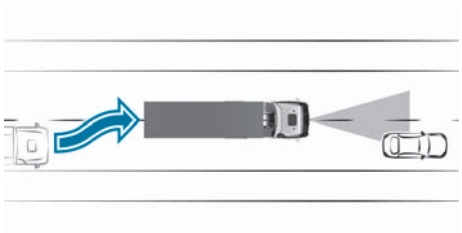

When you are overtaking, Active Brake Assist and the Proximity Control Assist may in the following cases unexpectedly issue warnings or brake your vehicle if you:

- drive too close to the vehicle in front
- you are still in the lane of the vehicle in front

Winding stretches of road

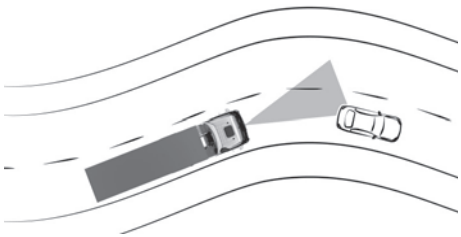

On winding stretches of road, Active Brake Assist and the Proximity Control Assist cannot always detect which lane the vehicle in front is driving in:

- Active Brake Assist and the Proximity Control Assist may unexpectedly issue warnings or brake your vehicle.
- Active Brake Assist and the Proximity Control Assist cannot issue warnings/brake although there is a critical driving situation.
- The Proximity Control Assist may accelerate unexpectedly.

Obstacles and stationary vehicles

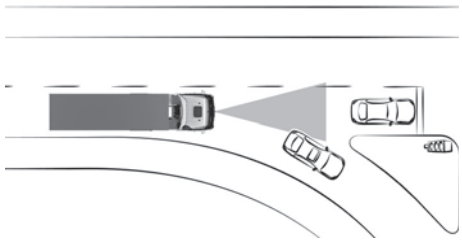

Active Brake Assist and the Proximity Control Assist may be too late detecting obstacles or stationary vehicles in front of the detected vehicle:

- Active Brake Assist and the Proximity Control Assist may unexpectedly issue warnings or brake your vehicle.
- Active Brake Assist and the Proximity Control Assist cannot issue warnings/brake although there is a critical driving situation.
- The Proximity Control Assist may accelerate unexpectedly.

Vehicles parked at the roadside

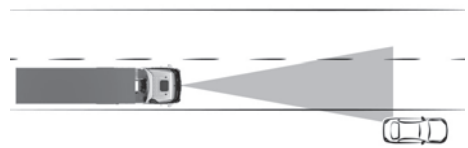

Active Brake Assist and the Proximity Control Assist may react to vehicles parked at the roadside:

- Active Brake Assist and the Proximity Control Assist may unexpectedly issue warnings or brake your vehicle.
- The Proximity Control Assist may accelerate unexpectedly.

Stationary objects

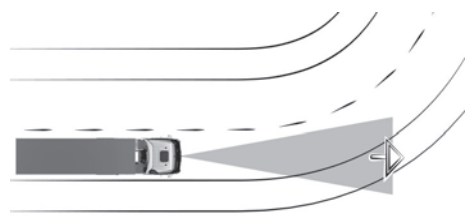

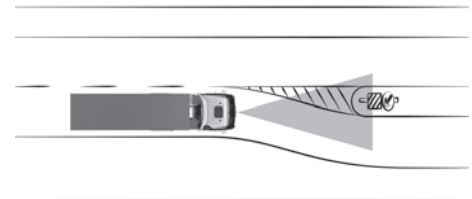

Active Brake Assist can also unexpectedly issue warnings and brake the vehicle if it detects stationary objects next to your lane. Examples of this are:

- Broken-down vehicles
- Road boundaries, e.g. roadside posts
- Signs
- Bridges
- Traffic islands
- Parked vehicles
- People

Pedestrians and cyclists

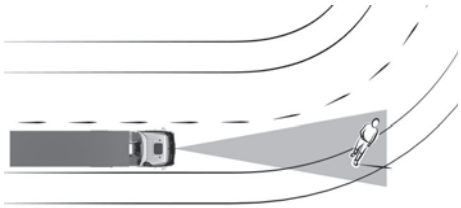

Active Brake Assist may also unexpectedly issue a warning or brake for people moving along the roadside on a bend.

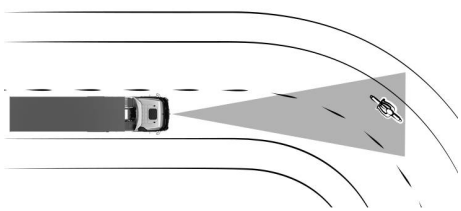

Active Brake Assist may also unexpectedly issue a warning or brake in the event of oncoming cyclists on a bend.

Traffic Sign Assist

Function of Traffic Sign Assist

Traffic Sign Assist is only an aid. Always adjust your speed to suit the traffic situation. The driver is responsible for complying with traffic regulations at all times.

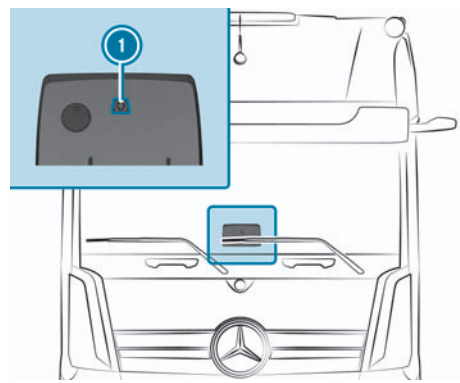

Traffic Sign Assist detects traffic signs with a multifunction camera (1). It assists you by displaying detected speed limits and overtaking restrictions and warning signs in the instrument cluster.

Traffic Sign Assist uses the map data stored and can, in the following situations, update the display without having detected a traffic sign:

- When changing lanes, for example, when entering or exiting a motorway
- When the map indicates an updated maximum permissible speed

Note

In countries without map data, the function is restricted.

Beside the information in the map, legally applicable limit speeds of the respective country are taken into account.

Traffic signs with a restriction indicated by an additional sign (e.g., in wet conditions) are also detected by the camera. These will be taken into account in the display for the speed limit or displayed separately if they cannot be allocated accordingly.

Display in instrument cluster

Display Traffic Sign Assistant (example)

Displays

1. Maximum permissible speed
2. Alternative maximum permissible speed, overtaking restrictions, and warnings
3. Additional sign with restriction

If more than two traffic signs are detected by the system, Traffic Sign Assist selects the two most relevant traffic signs for the display.

Speed limits on slip roads

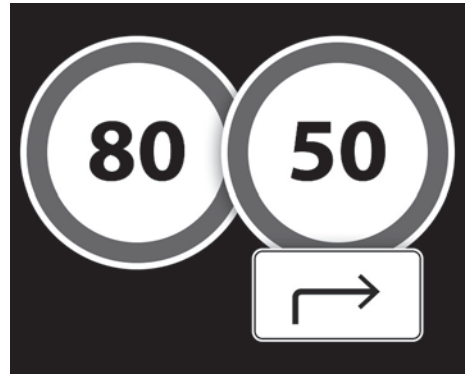

Speed limits detected in the area of an exit are displayed in the instrument cluster with an arrow as an additional symbol. The additional symbol is displayed even if the actual traffic sign does not have an additional symbol.

At the same time, the permissible speed of the road being travelled is displayed in the instrument cluster to the left.

Warning when the maximum permissible speed is exceeded

The system can warn you if you unintentionally exceed the maximum permissible speed. To do this, the system issues a warning tone and the corresponding traffic sign in the instrument cluster flashes red.

In certain situations, a warning tone or a warning in the instrument cluster does not sound.

No warning tone is issued in the following cases:

- If the vehicle is slowed down by the driver
- When the vehicle speed is less than 20 km/h

In the following cases, no warning is issued in the instrument cluster:

- In the area of the tachograph control if there is no explicit speed limit
- PPC Interurban is active (→ Page 290)
- If the warning function has been switched off (→ Page 307)

Warning when an overtaking manoeuvre is detected in a no-overtaking zone

The system can give you a visual warning if you start an overtaking manoeuvre in a no-overtaking zone. The corresponding traffic sign flashes red in the instrument cluster.

Acoustic information when the maximum permissible speed is changed

The system can inform you by means of an audible notification when a new maximum permissible speed is detected.

The function can be deactivated in the multimedia system (→ Page 307).

Display of system statuses

In addition to the display of traffic signs in the instrument cluster, the system also informs you of restrictions on individual functions.

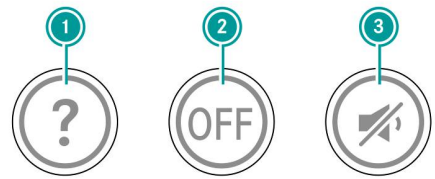

System states

1. No applicable speed limit could be detected.
2. The system has been switched off or is unavailable due to a malfunction.
3. The warning tone for when the maximum speed is exceeded is switched off.

Note

The display 3 is shown for ten seconds after the warning tone is switched off.

System limits

The system may be impaired or may not function in the following situations:

- If the traffic signs are hard to see, for example, due to dirt, obstruction, snow, or inadequate lighting.
- If the information in the digital road map is incorrect or not up to date
- When using a non-ISO compliant trailer
- If the signs are ambiguous, such as traffic signs in construction zones, adjacent lanes, and entrances and exits.
- If there are dynamic signs, e.g. LED displays.
- If there are signs which do not meet the official requirements.
- In poor visibility conditions, such as inadequate road illumination, rapidly changing shadow conditions, rain, snow, fog, or heavy spray.
- In case of glare, for example, from oncoming traffic, direct sunlight, or reflections.
- If the windscreen in the area of the camera is dirty, misted up or damaged.
- if the windscreen in the area of the camera is obscured, for example, due to a faulty windscreen wiper or a sticker.

- If there are no lane markings, or several unclear lane markings are present for one lane, for example, around roadworks.
- After a major change in load with the vehicle switched on. Restart the vehicle after a major change in load.

Instruction labels for vehicles transporting hazardous goods are not taken into account by the system.

Make sure that the windscreen is always kept clean and unobstructed in the area of the camera (→ Page 421). Therefore, switch on the windscreen wiper to clean the windscreen, for example, or remove snow and ice from the windscreen.

Activating/deactivating Traffic Sign Assist

► In the multimedia system, in the Functions ▶▶ Assistance systems menu select the Traffic Sign Assist menu item.

◁ The following functions are available:
- Activating/deactivating Traffic Sign Assist.
- Activating/deactivating Traffic Sign Assist warnings
- Switch the audible information on or off when the maximum permissible speed changes.
- Current map version display.

Note

If the system is unavailable due to a malfunction, the menu item is greyed out.

Note

When the vehicle is started, Traffic Sign Assist's warning and display functions are automatically activated. The audible information when the maximum permissible speed is changed remains in the last selected setting.

Note

Daimler Truck AG offers an annual map update to ensure that the system operates as efficiently as possible. The driver is responsible for keeping the map up to date.

Lane Keeping Assist

Notes on Lane Keeping Assist

Danger

Risk of accident due to limited detection capability of Lane Keeping Assist

Lane Keeping Assist cannot always clearly identify lane markings.

In these cases, Lane Keeping Assist may therefore issue a warning unjustifiably or may not issue a warning at all.

► Always pay particular attention to the traffic situation and keep within the lane, especially if Active Lane Keeping Assist alerts you.

The system may be impaired or may not function in the following situations:

- If visibility is poor, e.g. due to insufficient road illumination or due to snow, rain, fog or heavy spray
- If there is glare, e.g. from oncoming traffic, direct sunlight or reflections (e.g. if the road surface is wet)
- if the windscreen in the area of the camera is dirty, misted up or damaged
- If the windscreen around the camera is obscured, e.g. due to a defective windscreen wiper or a sticker
- If there are no lane markings, or there are several unclear lane markings for one lane, for example, in roadworks
- if the lane markings are worn away, dark, or covered up, for example, by dirt or snow
- If the distance to the vehicle in front is too small and the lane markings thus cannot, therefore, be detected
- if the lane markings change quickly, e.g. lanes branch off, cross one another, or merge
- if the carriageway is very narrow and winding
- if there are highly variable shade conditions on the carriageway
- when attachments, such as a snowplough, obstruct the view of the lane markings through the camera
- after a major change in load with the vehicle switched on. Therefore, start the vehicle again after a significant change in load for Lane Keeping Assist to be available without any restrictions

► Keep the windscreen around the camera free of dirt, snow, or ice. Use the windscreen wipers, or clean the windscreen manually wherever necessary. Please read the information in "Notes on cleaning the vehicle exterior" (→ Page 415) and "Cleaning sensors" (→ Page 421).

Overview

The lane markings are shown in the Assistance menu in the instrument cluster.

The lane markings in the instrument cluster show the status of Lane Keeping Assist in colour:

- Grey lane marking: Lane Keeping Assist is either disengaged or engaged, but is not ready to issue warnings on the side of the vehicle in question.
- White lane marking: Lane Keeping Assist is engaged and ready to issue warnings on the side of the vehicle in question.
- Red lane marking: Lane Keeping Assist is engaged and is issuing a warning on the side of the vehicle in question.
- Blue lane marking (only vehicles with Active Drive Assist): Lane Keeping Assist is engaged and ready to issue warnings on the side of the vehicle in question. The Lane Keeping function is active (→ Page 323).

Functions and activation conditions

Lane Keeping Assist monitors the area in front of your vehicle with a camera that is on the base of the windscreen. When Lane Keeping Assist is activated and it

detects lane markings on the carriageway, it warns you that you may be leaving your lane unintentionally. Lane Keeping Assist does not automatically keep the vehicle in its lane.

The following conditions must be fulfilled so that Lane Keeping Assist is ready to issue warnings:

- You are driving above approximately 60 km/h.
- The lane markings must be shown in white in the instrument cluster.

When you drive over the lane marking unintentionally, the following warnings are issued:

- The relevant lane marking is shown in red in the instrument cluster.
- The volume of the audio equipment or hands-free system is reduced and a warning tone sounds from the speaker on the corresponding side of the vehicle.

If the vehicle is not fully within the lane markings after a warning has been issued, no further warnings are possible.

Lane Keeping Assist does not issue a warning in the following situations:

- You have switched on the turn signal indicator.
- You clearly and actively steer, brake or accelerate.
- When a driving safety system intervenes, e.g. Active Brake Assist or Stability Control Assist.

The warnings are then suppressed for a certain time period.

Lane Keeping Assist will warn you when changing lane if a turn signal indicator has been switched on for more than one minute.

Deactivating/activating Lane Keeping Assist

Depending on how the vehicle is equipped, it is possible to deactivate Lane Keeping Assist manually.

When you start the vehicle, Lane Keeping Assist is automatically activated.

► **Deactivation/activation:** In the multimedia system, in the Functions menu, Switch menu item, press the [OFF] button.

◁ If the indicator lamp [OFF] in the instrument cluster and the indicator lamp of the button [OFF] light up, this means Lane Keeping Assist is deactivated.

Note

If, in the multimedia system in the Switch menu item, there is no [OFF] button, Lane Keeping Assist cannot be deactivated in your vehicle.

Attention Assist

Notes on Attention Assist

Attention Assist may be impaired or inoperative in the following situations:

- when driving with Active Drive Assist activated (→ Page 321)
- If visibility is poor, e.g. due to insufficient road illumination or due to snow, rain, fog or heavy spray

- if the windscreen in the area of the camera is dirty, misted up or damaged
- If the windscreen around the camera is obscured, e.g. due to a defective windscreen wiper or a sticker
- if there are often no lane markings, or multiple ambiguous lane markings for a single lane, such as in construction zones
- if the lane markings are worn away, dark, or covered up, for example, by dirt or snow
- when experiencing frequent glare, such as from oncoming traffic, direct sunlight, or reflections (e.g., on wet roads)
- on winding roads
- if the distance to the vehicle in front is too short so that the lane markings often cannot be detected
- if attachments obstruct the camera's view of the lane markings
- After a major change in load with the vehicle switched on: Restart the vehicle after a major change in the load.

► Make sure that the windscreen is always kept clean and unobstructed around the camera (→ Page 421). Therefore, for example, turn on the windshield wipers or remove snow and ice from the windshield.

Overview

Attention Assist helps you during long, monotonous journeys, e.g. on motorways and trunk roads. Attention Assist is active at speeds above approximately 60 km/h.

If Attention Assist has detected typical indications of fatigue or increasing lapses in concentration on the part of the driver, it suggests taking a break. A warning is shown by Attention Assist irrespective of legally prescribed driving and rest periods or digital tachograph functions.

Functions and activation conditions

Attention Assist assesses your level of fatigue or lapses in concentration by taking the following criteria into account:

- Personal driving style, for example, lane keeping, steering behaviour
- Driving conditions, for example, duration of the journey

Attention Assist is restricted and a warning does not occur or is delayed in the following situations:

- If you are predominantly driving at under 60 km/h
- If lane markings are not available or difficult to distinguish
- On winding roads

The following interventions occur if Attention Assist detects typical indicators of fatigue or increasing lapses in concentration on the part of the driver:

- A warning tone is issued.
- The instrument cluster shows the display message [icon] and Attention Assist: take a break?.

- Lane Keeping Assist is reactivated automatically.
- ► Take breaks regularly and in good time during longer journeys.

If you fail to take a break, Attention Assist can only warn you again after at least 15 minutes. When you switch off the vehicle or the vehicle is stationary for some time, Attention Assist resets the detection sequence.

Deactivating/activating Attention Assist

After starting the vehicle, Attention Assist is always activated.

- ► In the multimedia system in the Functions ▶▶ Assistance systems menu, switch Attention Assist on and off.

Sideguard Assist 2/Active Sideguard Assist 2

Function of Sideguard Assist 2/Active Sideguard Assist 2

General notes

Sideguard Assist can warn of the risk of a side-on collision, especially when turning or changing lanes. It contains the functions of the legally prescribed turning assistant (UN ECE R151, Blind Spot Information System).

Active Sideguard Assist can also trigger automatic braking and bring the vehicle to a standstill if it detects a risk of collision when the vehicle is turning within the system limits. The following notes on Sideguard Assist also apply to Active Sideguard Assist. The additional functions of Active Sideguard Assist are described separately in the following sections.

If you are not familiar with the equipment level of your vehicle, you can check before driving which system has been installed in your vehicle using the multimedia system.

You can identify this by the designation Sideguard Assist or Active Sideguard Assist in the multimedia system in the Functions ▶▶ Assistance systems menu.

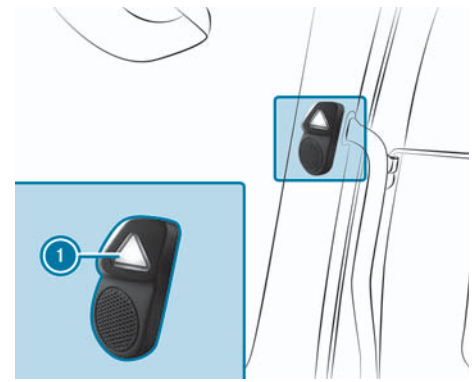

Warning display on the A-pillar in vehicles without MirrorCam system (example)

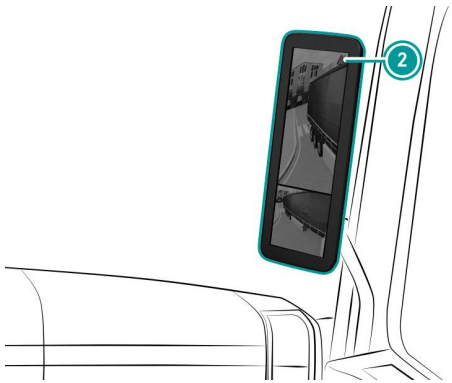

Warning display in vehicles with MirrorCam system (example)

The system monitors the area next to the towing vehicle and the trailer or semitrailer on both sides with two radar sensors each. The radar sensors are integrated into the wings and the corners of the front bumper. Information from the front radar and the multifunction camera is also processed.

The system supports you when turning off and changing lanes with the warning display ▲ in the A-pillar ① or in the MirrorCam display ②.

Sideguard Assist Info: The system detects a relevant object in the monitoring range. The warning display ▲ on the corresponding side lights up.

Sideguard Assist Warning: The system detects an increased risk of collision with a relevant object in the monitoring range. The warning display ▲ on the corresponding side lights up. A warning tone will also sound.

Note

Both “Sideguard Assist Information” and “Sideguard Assist Warning” display stages are referred to as warnings in the following, as they can transition directly into each other unless otherwise described.

When the vehicle is turning, Active Sideguard Assist can also react when turning within the reaction zone by automatically braking the vehicle to make it come to a standstill.

The system is not active when reversing.

Note

Trailers with an interface according to ISO 11992-2: Incorrectly set trailer information, such as length or number of axles, can lead to malfunctions relating to the trailer or semitrailer. In such cases, trailer monitoring may issue unnecessary warnings or no warnings at all.

If you detect a trailer or semitrailer malfunction, contact the trailer manufacturer.

Note

Trailers without an interface according to ISO 11992-2: After coupling a trailer or semitrailer, it is necessary to perform a number of cornering manoeuvres until the system has adjusted to the new trailer or semitrailer.

Note

You can find information on whether your trailer or semitrailer includes an interface ISO 11992-2 in the operating instructions provided by the trailer or semitrailer manufacturer.

Note

Trailer/semitrailer without electronic brake system (EBS): Afterhitching up/coupling up thetrailer/semitrailer, switch off the vehicle and restart it. Otherwise, trailer monitoring may be impaired or may not function.

You can find information on whether your trailer or semitrailer includes EBS in the operating instructions provided by the trailer or semitrailer manufacturer.

Setting of the traffic direction

The sensitivity with regard to a Sideguard Assist warning output and the reaction zone relevant to a braking manoeuvre of Active Sideguard Assist depends on the traffic direction set in the vehicle.

In countries in which traffic moves on the opposite side of the road to the country in which the vehicle is registered, it is necessary to change the setting in the multimedia system in the Functions ▶▶ Assistance systems ▶▶ Traffic direction menu.

Incorrect setting of the traffic direction can lead to unauthorised system reactions.

Note

Vehicles with Sideguard Assist: The traffic direction setting option is not available for specific countries.

Sideguard Assist warning range

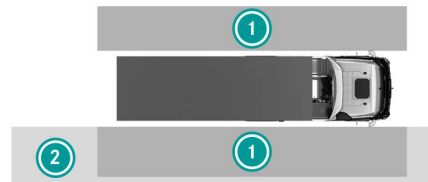

Overview (example using a left-hand drive vehicle)

The length of the warning area ① depends on the vehicle speed, but it always covers at least the vehicle length detected by the system, including any trailer /semitrailer, if applicable.

The width of the warning range ① is equivalent to approx. one lane.

The extended information area ② results from the legal requirement in accordance with UN ECE R 151 and is always located on the front passenger side. The length of this information-only area ② depends on the vehicle speed and is a maximum of 37 m.

Note

Due to the size of the legal information area ②, a warning display ▲ may also appear for traffic following behind.

Proximity monitoring zone (example)

From a vehicle speed of approx.40 km/h, warnings of vehicles rapidly approaching from behind are also given on the basis of an approach monitoring zone ③.

Relevant monitoring range for the brake application of Active Sideguard Assist (reaction zone)

The length of the reaction zone which is relevant for braking is based on the length of the towing vehicle detected by the system.

The width of the reaction zone that is relevant to braking is determined dynamically according to the respective situation and is at most 2 m.

Note

The reaction zone Traffic directionLeft is on the left side of the vehicle when the setting is selected and on the right side of the vehicle when the setting Right is selected.

Reaction zone (example for TRAFFIC DIRECTION right setting)

System limits

Full system performance is not yet available for a few seconds after having switched on the vehicle or after having moved off.

As a result of the system characteristics, warnings may be issued in error when driving close to crash barriers or similar solid boundaries. In these situations, Active Sideguard Assist may initiate additional brake applications in error.

Due to the nature of the system, the warning may be interrupted when driving alongside long vehicles, e.g. HGVs.

Due to system limitations, during longer journeys near uniform road structures, such as tunnel walls, sensor interference may occur. A corresponding display message will be shown in the instrument cluster. (→ Page 572) If the fault no longer applies, the display message disappears and the system will be available again.

Depending on the situation and the trailer or semitrailer, the system may warn you too early or not at all.

- Ensure that the covers of the radar sensors are free from dirt, ice, or slush (→ Page 421).

If Sideguard Assist or Active Sideguard Assist is malfunctioning or has been automatically deactivated due to an implement being used, the or indicator lamp in the instrument cluster lights up. In this case, sufficient warnings are not issued regarding objects in the monitoring range, or no warning is issued at all, and Active Sideguard Assist does not initiate brake applications. In the event of a malfunction, have the system checked at a qualified specialist workshop.

The system may be impaired or may not function in the following situations in particular:

- in the case of dirty, icy, or covered sensors, for example, by snow or heavy spray
- in very wide lanes
- if the carriageway is very narrow and winding
- if the radar sensors are impaired due to interference, for example, from strong or unfavourable radar reflections caused by crash barriers or other infrastructure
- if the windscreen in the area of the camera is dirty, misted up or damaged
- if the windscreen in the area of the camera is obscured, for example, due to a faulty windscreen wiper or a sticker
- When manoeuvring: Sideguard Assist is not a manoeuvring aid.
- If the traffic direction is set incorrectly

The system may not fully identify the trailer in the following situations:

- Shortly after reversing
- Shortly after coupling or hitching up

In this case, the system may mistakenly issue a warning, or it may not issue a warning at all.

In the following cases in particular, have the function of the radar sensors checked at a qualified specialist workshop:

- After a severe impact
- After damage to the sensors or their surroundings

Otherwise, it can no longer be guaranteed that Sideguard Assist will operate correctly.

In some circumstances and in the following situations in particular, Sideguard Assist does not react correctly:

- To pedestrians or cyclists who are obscured by other objects
- To pedestrians or cyclists who suddenly change direction or speed
- To persons or vehicles moving very quickly within the detection range of the sensors
- To stationary objects or objects moving at the same speed as your own vehicle
- When turning into multiple lanes in the same general direction as vehicles in the adjacent lane
- during manoeuvres that involve pulling out

Danger

Risk of accident due to limited detection capability of Sideguard Assist or Active Sideguard Assist

The system cannot always clearly identify objects and complex traffic situations.

In these cases, the system may:

- issue an unnecessary warning
- not issue a warning

Active Sideguard Assist may also:

- break without due cause
- may not break at all

► Drive on carefully and be ready to brake, particularly if the system issues a warning.

► Always pay careful attention to the traffic situation, and maintain a safe distance at the side of the vehicle.

You can manually cancel an unjustified brake application by Active Sideguard Assist (→ Page 320).

Danger

Risk of collision despite Active Sideguard Assist

Active Sideguard Assist can brake your vehicle automatically, bringing it to a standstill, if it detects a risk of collision. This automatic brake application cannot always prevent a collision. If you do not also brake the vehicle yourself, a collision can occur.

► If there is a risk of collision, brake the vehicle yourself, and take evasive action if possible.

► Adapt your driving style to the weather conditions when turning.

► Do not perform function tests involving people, animals, or objects.

Active Sideguard Assist can only initiate a brake application if all the following conditions are met:

- You are driving in a speed range typical for the turning manoeuvre up to approx. 20 km/h.
- You are performing a significant steering movement in the direction of the set traffic side.
- The vehicle has travelled a distance of at least 5 m after reversing or since the last system intervention.
- The ▲ warning display on the A-pillar or MirrorCam display lights up.
- A moving object or an object classified as movable is detected in the reaction zone relevant for the brake intervention.
- The direction of movement of your own vehicle and the object indicates an imminent collision.

Note

An object is classified as movable in the following cases:

If it has been seen moving by a sensor at an earlier time and then stops

If the multifunction camera detects a stationary pedestrian or cyclist

Note

The system will only react to oncoming traffic if the system detects a pedestrian or cyclist.

The Active Sideguard Assist can also react to objects moving along the roadside, such as when people are waiting at a traffic light.

A warning may not be issued despite the risk of collision for the following reasons in particular:

- The system has failed or there is a malfunction.
- The system has failed to detect the danger of the situation.
- If the traffic direction is set incorrectly.
- The system's acoustic warning system is switched off. The visual warning and information display remains active in this case.

Active Sideguard Assist does not brake without prior warning.

A brake application may not be initiated by Active Sideguard Assist despite previous warning and the applicable collision risk on the front passenger's side for the following reasons in particular:

- Active Sideguard Assist's active braking function and the acoustic warning are deactivated.
- There is a very low intrinsic speed, for example, when the vehicle is rolling.
- There is a malfunction in the brake system.

Sideguard Assist displays in the instrument cluster

In addition to the display on the A-pillar or MirrorCam display, the ▲ warning display is also shown in the instrument cluster Assistance menu.

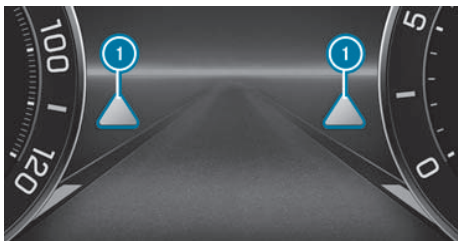

① Warning display in the Assistance menu (example)

The indicator lamps in the status area of the instrument cluster inform you of the current status of the system.

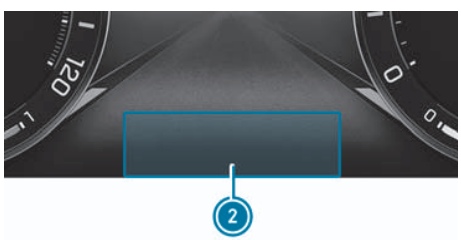

Example illustration

The following indicator lamps can be ② displayed in the status area:

	Active Sideguard Assist's acoustic warning and additional automatic

	brake application have been deactivated (→ Page 320). The steering intervention has been deactivated (only on vehicles with Active Drive Assist 3) (→ Page 321).
	The system is only available to a limited extent (e.g. the system is only available on one side due to the failure of a sensor or automatic deactivation due to the use of an implement).
	The system is unavailable due to a malfunction or automatic deactivation due to the use of an implement.

Warning when turning

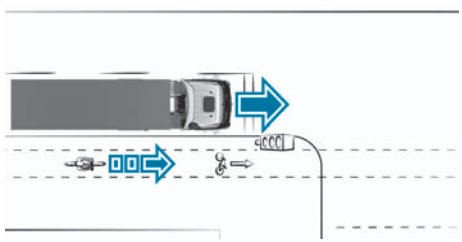

Example of turning right

The system warns of a moving object or an object classified as moving in the side monitoring zone up to a vehicle speed of approx. 40 km/h.

A moving object or an object classified as moving is located in the monitoring range. The ▲ warning display on the A-pillar or MirrorCam display lights up.

In addition, the corresponding warning indicator ▲ in the menu Assistance of the instrument cluster lights up.

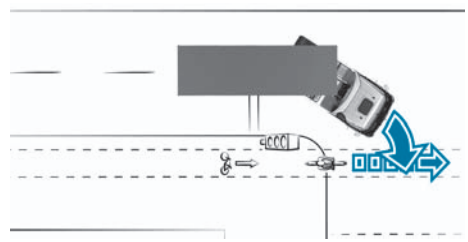

Example of turning right

A moving object or an object classified as moving is located in the monitoring range. If you steer or indicate in the direction of turning, and the system detects an increased risk of collision, the warning display ▲ in the A-pillar or in the MirrorCam Display flashes for approximately two seconds. A simultaneous warning tone sounds. The red warning light then lights up continuously while there is a risk of collision.

In addition, the ▲ warning display in the instrument cluster Assistance menu lights up.

Additionally, Active Sideguard Assist can trigger a braking procedure following the red warning light and warning tone.

After Active Sideguard Assist has performed a full brake intervention bringing the vehicle to a standstill, the instrument cluster shows the display message Braking completed and the HOLD function (→ Page 244) is activated.

Warning for vehicles approaching from behind

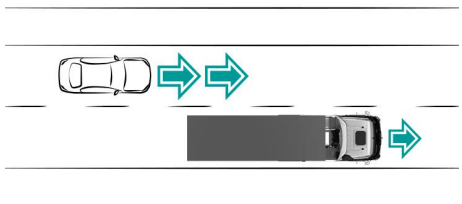

Example

As of a vehicle speed of approx. 40 km/h, the system warns of vehicles approaching quickly from behind in the neighbouring lane.

An object approaching quickly from behind is located in the approach monitoring zone. The ▲ warning display on the A-pillar or MirrorCam display lights up.

In addition, the corresponding warning indicator ▲ in the menu Assistance of the instrument cluster lights up.

Warning during lane change

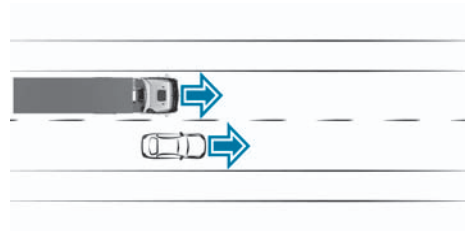

Example of overtaking manoeuvre

The system warns of moving objects or objects classified as moving in the neighbouring lane, regardless of the vehicle's own speed.

A moving object or an object classified as moving is located in the monitoring range. The ▲ warning display on the A-pillar or MirrorCam display lights up.

In addition, the corresponding warning indicator ▲ in the menu Assistance of the instrument cluster lights up.

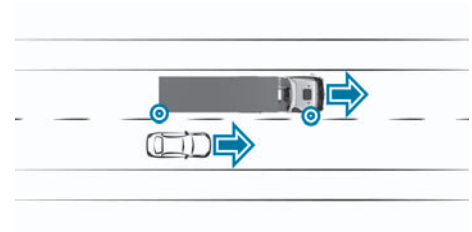

Example of overtaking manoeuvre

There is a vehicle in the danger zone when changing lanes. If you indicate or steer in the direction of the object and the system identifies an increased risk of collision (e.g. in the event of a critical approach), the ▲ warning display in the A-pillar or MirrorCam display flashes for approximately two seconds. A simultaneous warning tone sounds. The warning light then lights up continuously while there is a risk of collision.

In addition, the ▲ warning display in the instrument cluster Assistance menu lights up.

Note

If a warning of the same object is issued several times while the light is flashing, only the visual system reaction is repeated. The acoustic warning tone is then suppressed.

Vehicles with Active Drive Assist 3 In addition to the system reaction described here, an emergency steering intervention can also take place (→ Page 329).

Interrupting the brake application of Active Sideguard Assist 2

If Active Sideguard Assist initiates a brake application in a non-critical situation, you can interrupt it as follows:

- By quickly depressing the accelerator pedal significantly beyond the current position, or beyond the point of resistance (kick-down).

Switching Sideguard Assist 2's warning tone and Active Sideguard Assist 2's additional brake application on and off

When you start the vehicle, the system is automatically activated.

If Sideguard Assist or Active Sideguard Assist is malfunctioning or has been automatically deactivated due to an implement being used, the or indicator lamp in the instrument cluster lights up. In this case, sufficient warnings are not issued regarding objects in the monitoring range, or no warning is issued at all, and Active Sideguard Assist does not initiate brake applications. In the event of a malfunction, have the system checked at a qualified specialist workshop.

Sideguard Assist

- **Switching off:** In the multimedia system in the Functions ▶▶ Assistance systems menu, switch off Sideguard Assist.
  - ◁ Sideguard Assist's warning tone is switched off.
    The indicator lamp in the instrument cluster lights up.
- **To switch on:** In the multimedia system in the Functions ▶▶ Assistance systems menu switch on Sideguard Assist.
  - ◁ Sideguard Assist's warning tone is switched on.
    The indicator lamp in the instrument cluster goes out.

Active Sideguard Assist

- **Switching off:** In the multimedia system in the Functions ▶▶ Assistance systems menu, select the Active Sideguard Assist menu item and switch off the Turns function.
  - ◁ Active Sideguard Assist's warning tone and brake intervention are switched off.
    The indicator lamp in the instrument cluster lights up.
    On vehicles with Active Drive Assist 3, the warning tone is only switched off below a vehicle speed of 60 km/h.

- **Switching on:** In the multimedia system in the Functions ▶▶ Assistance systems menu, select the Active Sideguard Assist menu item and switch on the Turns function.
  - ◁ Active Sideguard Assist's warning tone and brake intervention are switched on.
    The indicator lamp [ ] in the instrument cluster goes out.
    On vehicles with Active Drive Assist 3, the warning tone is only switched on below a vehicle speed of 60 km/h.

Vehicles with Active Drive Assist 3 Switching the warning tone and steering intervention on/off above 60 km/h

Note

The function is only available on vehicles with Active Drive Assist 3 (→ Page 329).

When you start the vehicle, the system is automatically activated.

- **Switching off:** In the multimedia system in the Functions ▶▶ Assistance systems menu, select the Active Sideguard Assist menu item and switch off the Lane change function.
  - ◁ This switches off the warning tone above a vehicle speed of 60 km/h and the additional steering intervention.
    The indicator lamp [ ] in the instrument cluster lights up.
- **To switch on:** In the multimedia system in the Functions ▶▶ Assistance systems menu, select the Active Sideguard Assist menu item and switch on the Lane change function.
  - ◁ The warning tone above a vehicle speed of 60 km/h and the additional steering intervention are switched on.
    The indicator lamp [ ] in the instrument cluster goes out.

Active Drive Assist 3

Notes on Active Drive Assist 3

Active Drive Assist is only an aid. You are responsible for driving the vehicle safely, in particular, for the distance to the vehicle in front, the vehicle speed, steering and for braking in good time.

You must always adapt your driving style to suit prevailing road and weather conditions and drive carefully.

Active Drive Assist (ADA) is designed to support the driver with longitudinal and lateral guidance.

Active Drive Assist has the following subfunctions:

- Proximity Control Assist (PCA) (→ Page 281)
- Lane Keeping (LK) (→ Page 323)
- Emergency Stop Assist (ESA) (→ Page 326)
- Lane Departure Protection (LDP) (→ Page 327)
- Emergency Steering (only for vehicles with Active Sideguard Assist) (→ Page 329)

Note

It is only possible to use Active Drive Assist when Proximity Control Assist is activated.

Longitudinal distance control function

The longitudinal distance control function of Active Drive Assist is managed by Proximity Control Assist.

Please read the notes on Proximity Control Assist (→ Page 281).

Lateral distance control function

For the Active Drive Assist lateral distance control function, standard Lane Keeping Assist (→ Page 307) has been supplemented with Lane Keeping and Lane Departure Protection functions. Vehicles with Active Sideguard Assist also have the Emergency Steering function.

Lane Keeping supports the driver in keeping the vehicle within the lane markings.

Lane Departure Protection can warn the driver audibly if the vehicle leaves the lane unintentionally and, within system limits, can guide the vehicle back into the lane with a steering intervention.

Emergency Steering can guide the vehicle back into its own lane by means of a steering intervention if there is a risk of collision during an intentional lane change.

System limits

Active Drive Assist has been developed for journeys on motorways and high-speed major roads. In particular, when you are driving through roadworks, on country roads or in urban traffic, the function must generally be deactivated as the efficacy of Active Drive Assist may be limited.

Danger

Risk of accident due to Active Drive Assist's limited detection capabilities

Active Drive Assist cannot always clearly detect lane markings.

In such cases, Active Drive Assist may:

- issue an unnecessary warning
- Steer unnecessarily
- Not issue a warning
- Fail to steer

▶ Always pay particular attention to the traffic situation and keep within the lane, especially if Active Drive Assist alerts you.

In the following situations in particular, the system may be impaired or may not be operational:

- If visibility is poor, e.g. due to insufficient road illumination or due to snow, rain, fog or heavy spray
- If there is glare, e.g. from oncoming traffic, direct sunlight, varying light

conditions (e.g. in tunnels) or reflections (e.g. if the road surface is wet)
- If the windscreen in the area of the camera is dirty, misted up or damaged
- If the windscreen around the camera is obscured, e.g. due to a defective windscreen wiper or a sticker
- If there are no lane markings or there are several unclear lane markings for one lane, e.g. in roadworks
- If the lane markings are worn away, dark or covered e.g. by dirt or snow
- If the distance to the vehicle in front is too small and the lane markings therefore cannot be detected, e.g. by a vehicle pulling into your lane
- If lane markings change quickly (e.g. lanes branch off, intersect or merge, e.g. on slip roads/exits)
- If there are irregularities in the road surface, e.g. tar joints
- When using tyres with a very soft rubber compound (e.g. Nordic tyres)
- The road is narrow and winding
- if there are highly variable shade conditions on the carriageway
- when attachments, such as a snowplough, obstruct the view of the lane markings through the camera
- If the radar sensors are dirty or covered
- after a major change in load with the vehicle switched on. Restart the vehicle after a major change in load so that Active Drive Assist is available without limitations.

Keep the windscreen around the camera free of dirt, snow or ice. Use the windscreen wipers or clean the windscreen by hand if required. Please refer to the "Notes on cleaning the vehicle exterior" (→ Page 415) and "Cleaning sensors" (→ Page 421) sections.

Lane Keeping function (LK)

Continuous lane guidance is carried out by the Lane Keeping function.

The driver is then supported in keeping the vehicle between the lane markings by additional steering interventions.

Camera and radar signals are primarily used to control this.

The Lane Keeping function is activated automatically upon activation of Proximity Control Assist (→ Page 284).

If the conditions for active steering are not met at the time of switching on, the system is initially in passive mode. This is shown to the driver by the status display in the instrument cluster.

Once the conditions for active steering are met, the system changes to active mode. This is shown to the driver by the status display in the instrument cluster.

The Lane Keeping function now assists the driver (within system limits) in keeping the vehicle in the centre of the detected lane by noticeable steering interventions.

The driver is able to override the Lane Keeping steering interventions at any time by actively steering. The function remains active when minor steering corrections are made by the driver. The system detects abrupt corrective steering, e.g. evasive swerving. The system then switches

to passive mode. This is signalled to the driver by a warning tone and a red display message Take control of steering immediately on the instrument cluster. These warnings are not issued if the system has been active for less than five seconds.

Danger

Risk of accident due to unexpected steering interventions by Active Drive Assist

Lane marking and object detection may be impaired. This can lead to unexpected steering interventions.

- ► Steer the vehicle according to the traffic situation.
- ► If necessary, override Active Drive Assist steering interventions manually.

Danger

Risk of accident due to unexpected cancelling of Active Drive Assist

If Active Drive Assist reaches system limitations, there is no guarantee that the system will remain active or maintain laneholding.

- ► Always keep your hands on the steering wheel and pay careful attention to road and traffic conditions.
- ► Always steer the vehicle as the traffic and situation demands.

If you are driving with the Lane Keeping function activated and the conditions for active steering by the function are no longer met, for example, if lane markings are not detected or if the lane width is too narrow/wide, the system automatically switches to passive mode. This is signalled to the driver by a warning tone and a red display message Take control of steering immediately on the instrument cluster. Once the conditions are met again, the system changes back to active mode automatically.

Select the status indicator

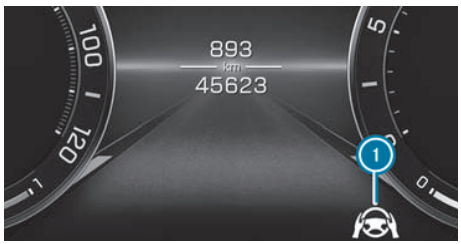

Example: Lane Keeping status display

The driver is shown the current status of the system by the status display ① on the instrument cluster.

Status display ① differentiates between the following system states:

- No display – the function is deactivated or Proximity Control Assist is not active.
- Flashing grey - the system is faulty. The function has been deactivated automatically.
  - ■ If the problem persists after the vehicle is started, have the system checked at a qualified specialist workshop.

- Lit up grey - the function is switched on but passive
  - No lane markings detected
  - Lane too narrow or too wide
  - Bend too tight
  - Change of lane detected
  - Turn signal indicator operated
  - Driver intervention detected
  - Function deactivated due to driver inactivity
- Lit up blue - the function is switched on and active

In the event of a fault, Active Drive Assist is deactivated automatically. If the system was in active mode, the instrument cluster shows the red display message Take control of steering immediately.

Hands-on

Active Drive Assist requires you as the driver to keep your hands on the steering wheel at all times so that you are able to intervene at any time.

If there is no steering wheel input for a period of 15 seconds, the instrument cluster shows a display message with the symbol .

If there is no steering wheel input for a period of 30 seconds, the instrument cluster shows a display message with the symbol and a warning tone sounds.

If the steering wheel is not operated for a period of 55 seconds, the intensity of the warning tone increases and the hazard warning lights are switched on automatically.

If there is no steering wheel input for a period of 60 seconds, the Lane Keeping function switches on in passive mode, a permanent warning tone sounds and Emergency Stop Assist is activated. The status display on the instrument cluster then changes to the Emergency Stop Assist display (→ Page 326).

If the Lane Keeping function is switched on to passive mode three times during an ignition sequence due to no driver activity, it is deactivated. The instrument cluster then shows the yellow display message Active Drive Assist unavailable. If you scroll down using the steering wheel buttons, the text Observe notes on taking control of steering Active Drive Assist deactivated for this ignition sequence is also displayed.

The function is available again after an ignition cycle.

If none of the described visual or audible warnings are issued despite the driver remaining inactive, the system must be checked at a qualified specialist workshop. In this case, deactivate the system and drive with particular care.

Driver intervention

System steering interventions can always be overridden by the driver.

In the event of abrupt steering interventions, such as evasive swerving or operating the turn signal indicator, the function switches to passive mode for a brief period.

Setting the target lane position

The driver has the ability to shift the target position in the lane, according to which the system is making adjustments,

either to the left or right of the centre of the lane.

To change this setting, press button in the left-hand button group on the multi-function steering wheel until the Distance / lane position menu is displayed on the instrument cluster.

Shift the target lane position to the left or right using the steering wheel buttons. The target lane position set is shown on the instrument cluster.

Example: Distance/lane position menu

Note

The next time the vehicle is started up, a target position shifted to the left or right is automatically reset to the centre of the lane (basic setting).

Deactivating and activating Lane Keeping

Note

The function can only be activated when Proximity Control Assist is activated (→ Page 281).

Note

The Lane Keeping function is activated automatically after the vehicle is started.

- **To switch on and off:** In the multimedia system, under the menu Functions, menu item Switch, press button .
  - ◁ The function is switched on when the indicator lamp in the button is lit up.

Function of Emergency Stop Assist (ESA)

If Active Drive Assist (ADA) is activated, if there is no steering wheel input despite visual and audible warnings, the Emergency Stop Assist function is activated. This initiates a deceleration to a standstill while maintaining the lane guidance within the described system limits of Active Drive Assist.

If Active Drive Assist (ADA) is activated and there is no steering wheel input despite visual and acoustic warnings, the vehicle responds as follows after 60 seconds:

- Vehicle deceleration is initiated.
- The display message Emergency stop will be executed Kickdown to cancel appears on the instrument cluster.
- The status display appears during the active lane guidance by the ESA function.
- The dipped beam will be switched on.

The driver can stop the ESA activity at any time by depressing the accelerator pedal past the pressure point (kickdown).

When the vehicle has been brought to an emergency stop, the following actions are carried out:

- The display message Emergency stop ended Re-engage gear to pull away appears on the instrument cluster.
- The vehicle is secured with the electric parking brake.
- The automatic transmission is shifted into the neutral position N.
- The doors are unlocked.
- Depressing the accelerator pedal has no effect.
- The hazard warning light system and dipped beam remain on.

To reactivate the accelerator pedal, a gear must be engaged again or the vehicle must be switched off and on.

If the Emergency Stop Assist intervention is interrupted due to a malfunction, the instrument cluster shows the display message Emergency Stop Assist not available.

In the event of a fault in the lateral control function during the intervention, the vehicle is decelerated to a standstill as described, but without lane guidance.

Lane Departure Protection function (LDP)

The Lane Departure Protection function is based on Lane Keeping Assist (→ Page 307).

Lane Keeping Assist can warn the driver with a warning tone if the lane is left unintentionally (driving across lane markings).

After Lane Keeping Assist has issued the warning tone, and if the lane markings can be adequately detected within system limits, an LDP steering intervention is then initiated. This steers the vehicle back into the lane. The steering interventions issued by the system can be overridden by the driver by countersteering.

Danger

Risk of accident despite Lane Departure Protection

A lane-correcting steering intervention cannot always bring the vehicle back into the original lane.

► Always steer independently, especially if Lane Keeping Assist issues a warning or Lane Departure Protection steers the vehicle to correct the lane.

The basic requirements for an active steering intervention are the warning tone and the detection of lane markings. If the

detection is inadequate, for example, if only one lane marking is detected, only a warning tone is issued. A steering intervention is not initiated in this case.

After each LDP steering intervention, the Lane Keeping function remains deactivated for ten seconds. The driver must actively take over the lane guidance of the vehicle.

If several steering interventions are carried out by LDP and no driver activity is immediately detected within a short period of time, an additional warning tone sounds. This warning tone is prolonged with each further LDP intervention when no immediate driver activity is detected.

The function can be used from a speed of approximately 60 km/h.

Select the status indicator

In the instrument cluster, select the menu [ ] Assistance.

If both lane markings are displayed in white, the system is ready to issue warnings.

Activating and deactivating Lane Departure Protection

When the vehicle is switched on, Lane Departure Protection is automatically switched on.

- In the Functions menu of the multimedia system, select menu item Switch.
  - ◁ Depending on the equipment, your vehicle will be equipped with the [ ] or [ ] button.
- **Deactivation:** Press the button [ ] or [ ].
  - ◁ The indicator lamp on the button will light up.
    - Vehicles with button [ ]: The Lane Departure Protection function is deactivated. The indicator lamp [ ] in the instrument cluster lights up.
      Lane Keeping Assist (→ Page 307) cannot be deactivated on your vehicle and therefore remains activated.
    - Vehicles with button [ ]: The Lane Departure Protection function and Lane Keeping Assist (→ Page 307) are switched off. The indicator lamp [ ] in the instrument cluster lights up.
- **Activation:** Press the button [ ] or [ ].
  - ◁ The indicator lamp in the button goes out.
    - Vehicles with button [ ]: The Lane Departure Protection function is activated. The indicator lamp [ ] in the instrument cluster goes out.
    - Vehicles with button [ ]: The Lane Departure Protection function and Lane Keeping Assist are switched on. The [ ] indicator lamp in the instrument cluster goes out.

Emergency steering function

If the system detects a risk of collision during a lane change and the driver ignores the warnings issued by Active Sideguard Assist (→ Page 311), a steering intervention can be triggered within the system limits. This steers the vehicle back into the centre of the lane.

Prerequisites for steering intervention:

- The lane markings are detected correctly.
- The system detects a vehicle in the adjacent lane.
- You are indicating in the direction of the adjacent lane.
- The vehicle speed is at least 60 km/h.
- The Lane changeActive Sideguard Assist function is activated (→ Page 321).
- Active Sideguard Assist issues a warning.

Also observe the notes and system limits for Active Sideguard Assist (→ Page 311).

Note

The function does not depend on the activation status of Lane Keeping or Lane Departure Protection.

A steering intervention triggered by the system can be overridden by the driver at any time by countersteering.

Danger

Risk of accident when changing lane despite Emergency Steering intervention

The lane-correcting steering intervention made by the Emergency Steering function cannot always guide the vehicle back into the original lane or prevent a collision with a side object.

- ► Always keep control of the vehicle steering, particularly when Active Sideguard Assist issues a warning or Active Drive Assist makes a lane-correcting steering intervention.

The Active Sideguard Assist warning tone and the detection of lane markings and objects are basic requirements for an emergency steering intervention. In the event of insufficient detection (e.g. of the vehicle in the adjacent lane or a lane marking), the system may not react.

If a warning of the same object is issued several times while the light is flashing, only the visual system reaction of Active Sideguard Assist is repeated; there is no multiple steering intervention.

Switching the emergency steering intervention on and off

Steering intervention can be switched off and on in the multimedia system using the menu item Active Sideguard Assist function Lane change (→ Page 321).

Trailer Stability Assist

Trailer Stability Assist (TSA) function

The Trailer Stability Assist function prevents driving situations in which the tractor/trailer combination risks jackknifing due to an approaching trailer or semitrailer.

Driving situations of this kind may occur in the following cases, for example:

- when cornering in overrun mode
- when cornering on a slippery carriageway
- when the continuous brake is active

To prevent critical situations, Trailer Stability Assist stabilises the tractor/trailer combination by means of brief brake applications on the trailer or semitrailer.

A brake application by Trailer Stability Assist is indicated to the driver by the flashing symbol [TSA] in the instrument cluster.

If the temperature of the trailer brake is too high, Trailer Stability Assist is automatically deactivated.

If the system has been deactivated automatically, the indicator lamp of the [TSA] button flashes and the instrument cluster shows a corresponding display message.

Activate/deactivate Trailer Stability Assist (TSA)

TSA button on the lever of the electronic parking brake (example)

► Press the button [TSA].

◁ The function is switched on when the indicator lamp in the button is lit up. [TSA]

Level control system

Notes on level control

Danger

Risk of accident due to lowered or raised chassis

The braking and handling characteristics may be greatly impaired if the chassis frame is modified. You might also exceed the permitted vehicle height.

► Set the driving level before you set off.

Note

Damage to the vehicle due to driving in a lowered drive position

Driving outside of driving levels 1 and 2 can cause damage to the vehicle's suspension.

► Only use driving levels 1 and 2 in manoeuvring mode.

► In driving mode, raise the chassis to driving level.

Observe the applicable legal requirements for each individual country for the permissible vehicle height.

It is necessary to raise or lower the chassis to pick up or set down swap bodies or semitrailers. If you continue a journey after having changed the chassis height, it is necessary to lower or raise the chassis to driving level.

If the indicator lamp in the instrument cluster lights up, the chassis is not at driving level or the level control is malfunctioning. Observe the additional information in the display message.

When loading or unloading the vehicle when it is switched off, refer to the information in the "Loading and unloading the vehicle when the vehicle is switched off" section (→ Page 335).

Vehicles with axle configurations 8x4/4 and 8x2/4 with air-sprung rear axle: When operating the vehicle without a vehicle body, make sure that the chassis is always fully raised. Otherwise, you could damage the air suspension bellows on the rear axle. Further information on the characteristics of possible add-on equipment can be found in the body/equipment mounting directives.

Vehicles equipped with "driving level lowered" and/or with low profile tyres: Avoid operating the vehicle with a lowered chassis. Driving with a lowered chassis increases wear and tear on the vehicle and reduces driving comfort.

Level control can be used when the vehicle is stationary or while driving at up to approx. 30 m/h.

Depending on the vehicle equipment, there are the following options for operation of the level control system:

- the operating unit on the driver's seat
- the external operating unit on the vehicle body
- the buttons on the instrument panel
- the multimedia system (→ Page 333)

Activating and deactivating the level control operating unit

The operating unit is attached at the side between the driver's seat and the door.

Example shown on a fully air-sprung vehicle

Level control system operating unit

1	Pre-selection for raising or lowering the front axle
2	Pre-selection for raising or lowering the entire vehicle
3	Pre-selection for setting the driving level
4	Pre-selection for raising or lowering the rear axle
5	Buttons

▶	To activate the operating unit, make a pre-selection for the front axle, rear axle, entire vehicle, or driving level
◀	To activate the operating unit, make a pre-selection for the front axle, rear axle, entire vehicle, or driving level
▼	To activate the operating unit, lower the chassis, set the driving level
▲	To activate the operating unit, raise the chassis, set the driving level
STOP	To activate the operating unit, end raising or lowering operation
M1 M2	Short button press: Call up memory preset M1 or M2 for chassis height Long button press: Save memory preset M1 or M2 for chassis height

- ▶ Apply the parking brake.
- ▶ Switch on the vehicle.
  - ◁ The level control automatically adjusts the chassis frame to the previously stored height.
- ▶ If the reservoir pressure in the compressed-air system is too low, leave the vehicle switched on.
  - ◁ The compressed-air system is charged.
- ▶ Take the operating unit out of the holder.

Activating the operating unit

- ▶ The exterior operating unit on the driver's seat: Press the ▶, ◀, ▼, ▲, or STOP button briefly.

or

- ▶ The external operating unit on the vehicle body: Press and hold the STOP button for approximately two seconds.

Note

The external operating unit on the vehicle body can be activated and deactivated even if the key has been removed.

Deactivating the operating unit

- ▶ The external operating unit on the vehicle body: Press and hold the STOP button for approximately two seconds.

or

- ▶ The external control panel on the vehicle body and on the driver's seat: Wait for approximately 60 seconds; do not press any buttons.

or

- ▶ Drive at a speed above approximately 30 km/h.
  - ◁ The operating unit is automatically deactivated.

Raising or lowering the chassis with the operating unit

Danger

Risk of entrapment from vehicle lowering

When lowering the vehicle, other people may become trapped if their limbs are between the vehicle body and the tyres or underneath the vehicle.

- ▶ Make sure no one is underneath the vehicle or in the immediate vicinity of the wheel arches when you lower the vehicle.

- Press the [▸] or [◂] button to select front axle, entire vehicle, or rear axle.
  - ◁ The LEDs for the selected pre-selection light up.
- Press the [▾] button to lower the chassis frame or the [▲] button to raise it.
  - ◁ If the chassis frame is not at driving level, the indicator lamp [ ] in the instrument cluster will come on. In addition, the instrument cluster shows a display message with [ ] or [ ] and Set driving level..
- Press the (STOP) button to interrupt/end the raising or lowering operation.

Raising or lowering the chassis using the multimedia system

Danger

Risk of entrapment from vehicle lowering

When lowering the vehicle, other people may become trapped if their limbs are between the vehicle body and the tyres or underneath the vehicle.

- Make sure no one is underneath the vehicle or in the immediate vicinity of the wheel arches when you lower the vehicle.

When raising or lowering, depending on requirements, the front axle [ ], overall vehicle [ ] or rear axle [ ] can be selected.

- In the multimedia system, in the Suspension menu, select the Level control menu item.
- **Raising:** Press the [∧] button.
  - ◁ The chassis is raised as long as the button is pressed.
- **Lowering:** Press the [∨] button.
  - ◁ The chassis lowers as long as the button is pressed.

If the chassis frame is not at driving level, the indicator lamp [ ] in the instrument cluster will come on.

The instrument cluster also shows the display message [ ] or [ ] and Set driving level..

Storing/opening the chassis height

- In the multimedia system, in the Suspension menu, select the Level control menu item.

Storing

- Raise/lower the chassis to the desired height.
- In the multimedia system, press the [M1 M2] button for memory preset M1 or M2 for approximately two seconds.
  - ◁ The current chassis height is stored under the corresponding [M1 M2] button.

Calling up

- Briefly press the M1 M2 button for memory preset M1 or M2.
  - ◁ The chassis will be raised/lowered automatically to the stored height. The instrument cluster shows a display message with or and Set driving level..
- Press the STOP button to interrupt or end the raising or lowering operation.

Setting the driving level

Using the operating unit

- Press the button ▸ or ◂ to select driving level pre-selection ③.
  - ◁ The LEDs for driving level pre-selection ③ go on.
- Briefly press the ▾ or ▴ button.
  - ◁ The chassis will automatically be raised or lowered to the driving level. When the chassis frame is at driving level, the indicator lamp in the instrument cluster will go out.
- Press the STOP button to interrupt/end the raising or lowering operation.

Using the button on the instrument panel

Example: STOP and driving level button

- Press the button.
  - ◁ The chassis will automatically be raised or lowered to the driving level. When the chassis frame is at driving level, the indicator lamp in the instrument cluster will go out.
- Press the STOP button to interrupt/end the raising or lowering operation.

Using the multimedia system

- In the multimedia system, in the Suspension menu, select the Level control menu item.
- Press the button .
  - ◁ The chassis will automatically be raised or lowered to the driving level. When the chassis frame is at driving level, the indicator lamp in the instrument cluster will go out.
- Press the STOP button to interrupt/end the raising or lowering operation.

Loading and unloading the vehicle when the vehicle is switched off

Note

Damage to shock absorbers due to rebounding of the chassis

If swap bodies are removed, this may result in damage to shock absorbers due to the sudden rebounding of the chassis.

- ► Fully lower the chassis before removing swap bodies.

Store a constant chassis height for loading and unloading the vehicle.

- ► Vehicles with trailing axle: Lower the trailing axle (→ Page 341).
- ► If required, raise/lower the chassis to the desired height.
- ► Leave the vehicle switched on until the pressure regulator cuts out.
- ► Press and hold the STOP button on the operating unit.

or

- ► Press and hold the STOP button on the instrument panel.
- ► Switch off the vehicle.
- ► Vehicles with mechanical ignition lock: Remove the key from the ignition lock.
- ► Release the STOP button on the operating unit.

or

- ► Release the STOP button on the instrument panel.
  - ◁ If there is sufficient reservoir pressure in the compressed-air system, the height of the chassis is kept constant for approximately four to five hours.

Multimedia system

- ► In the multimedia system, in the Suspension menu, select the Level control menu item.

Store a constant chassis height for loading and unloading the vehicle.

- ► Vehicles with trailing axle: Lower the trailing axle (→ Page 341).
- ► If required, raise/lower the chassis to the desired height.
- ► Leave the vehicle switched on until the pressure regulator cuts out.
- ► Press and hold the STOP button on the operating unit.

or

- ► Press and hold the STOP button in the multimedia system.
- ► Switch off the vehicle.
- ► Release the STOP button on the operating unit.

or

- ► Release the STOP button in the multimedia system.
  - ◁ If there is sufficient supply pressure in the compressed-air system, the height of the chassis is kept constant for approximately four to five hours.

Special functions of the level control system

Notes

Note

Damage due to incorrect chassis height

If you start working mode before the chassis frame has been lowered completely, or if you raise the chassis frame to driving level before working mode has ended, the vehicle may be damaged.

- Select the driving level as required and wait until the chassis has reached the level that you have selected.

Forced lowering

When you engage a power take-off, the vehicle is completely lowered on all air-sprung axles. This increases the tipping stability of the vehicle.

Residual air bellow pressure readjustment

Depending on the equipment, it is possible to readjust the residual air bellows pressure.

Vehicles with residual air bellows pressure readjustment: if residual air bellows pressure control is active, the air suspension pressure on each axle is constantly monitored and, if necessary, increased/decreased until it matches a parameterisable value.

Vehicles without residual air bellows pressure readjustment: The air suspension pressure on the front axle is reduced until it matches a parameterised value. The air suspension valves are closed when the set value is reached. On the rear axle, the vehicle is lowered completely on all air-sprung axles. The air suspension valves on the rear axle subsequently remain open.

Automatic deactivation of the special functions using the button in the instrument panel

Special functions are deactivated in the following cases:

- The vehicle is switched off.
- The STOP button on the operating unit is pressed.
- The STOP button on the instrument panel is pressed.
- The button on the instrument panel is pressed.

Note

If the vehicle is switched on after an automatic deactivation, the special functions remain deactivated. A special function must, if necessary, be reactivated manually. Observe the bodybuilder's operating instructions when doing this.

Automatic deactivation of the special functions (multimedia system)

Special functions are automatically deactivated in the following cases:

- The vehicle is switched off.
- The STOP button on the operating unit is pressed.
- The STOP button in menu Suspension, menu item Level control is pressed.
- The button is pressed.

Using road paver mode

Activating using the button on the instrument panel

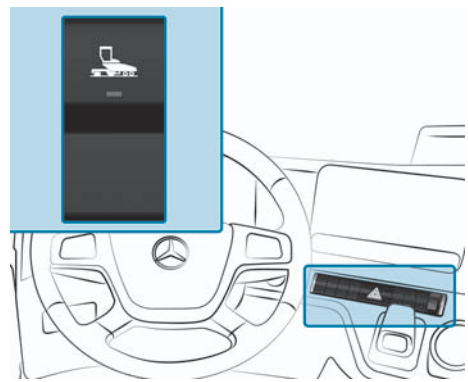

Note

Observe the notes on road paver mode (→ Page 345).

► Press the button above.

◁ The indicator lamp in the button flashes and the function is preselected.

► Engage the power take-off (→ Page 404).

◁ The instrument cluster displays and a display message. The function is activated when the indicator lamp in the button is lit.

Deactivating using the button on the instrument panel

► Press the STOP button on the operating unit.

or

► Press the STOP button on the instrument panel.

or

► Increase vehicle speed to over 10 km/h.

or

► Switch off the vehicle.

◁ The display in the instrument cluster and the indicator lamp in the button go out.

Activating with the multimedia system

Note

Observe the notes on road paver mode (→ Page 345).

- In menu Functions, menu item Switch of the multimedia system, press button .
  - ◁ The indicator lamp in the button flashes and the function is preselected.
- Engage the power take-off (→ Page 404).
  - ◁ The instrument cluster displays and a display message. The indicator lamp in the button is lit and the function is activated.

Deactivating with the multimedia system

- Press the STOP button on the operating unit.

or

- Press the button STOP in the multimedia system.

or

- Increase vehicle speed to over 10 km/h.

or

- Switch off the vehicle.
  - ◁ The display in the instrument cluster and the indicator lamp in the button go out.

Using raised driving level (vehicles for transportation of bulk cargo)

Using the button on the instrument panel

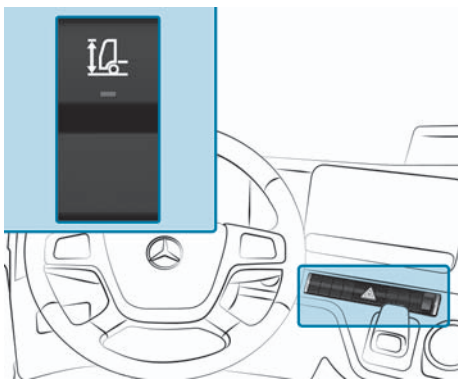

Raise the chassis while driving for improved ride comfort.

- **Raising the chassis frame to raised driving level:** Press the button above.
  - ◁ The indicator lamp in the button and the indicator lamp in the instrument cluster light up.

- **To lower the chassis frame to normal driving level:** Press the top button again.
  - ◁ The indicator lamp in the button goes out.
  - ◁ When the chassis is lowered to the normal driving level, the indicator lamp in the instrument cluster goes out.

Using the multimedia system

Raise the chassis while driving for improved ride comfort.

- In the multimedia system, in the Suspension menu, select the Level control menu item.
- **Raising the chassis frame to raised driving level:** Press the button in the multimedia system.
  - ◁ The indicator lamp in the instrument cluster lights up.
- **To lower the chassis frame to normal driving level:** Press the button again.
  - ◁ When the chassis is lowered to the normal driving level, the indicator lamp in the instrument cluster goes out.

Using manoeuvring level

Using the button on the instrument panel

Raised driving level and manoeuvring level button (example)

- Stop the vehicle.

or

- Drive at walking pace.
- **Switching on manoeuvring level:** Press the lower section of the raised driving level and manoeuvring level button (example).
  - ◁ The indicator lamp of the button and the indicator lamp in the instrument cluster light up.
  - ◁ The instrument cluster also displays the Shunting level active display message. The chassis lowers or rises to the manoeuvring level.
- **Deactivating manoeuvring level:** Press the lower section of the button again.
  - ◁ The indicator lamp of the button and the display message go out. The chassis lowers or rises to driving level.
  - ◁ When the chassis is raised or lowered to the normal driving level, the indicator lamp in the instrument cluster goes out.

The instrument cluster shows a display message if the speed at manoeuvring level is too high.

Manoeuvring level is deactivated automatically in the following cases:

- The chassis is lowered or raised manually.
- Raised or normal driving level is set.
- The button STOP on the control panel or the button STOP on the instrument panel is pressed.

Using the multimedia system

► Stop the vehicle.

or

► Drive at walking pace.

► **Switching on manoeuvring level:** In the multimedia system, in the Suspension menu, select the Level control menu item.

► Press the button in the multimedia system.

◁ The indicator lamp on the instrument cluster will come on.

◁ The instrument cluster also displays the display message Shunting level active. The chassis lowers or rises to the manoeuvring level.

► **Deactivating manoeuvring level:** Press the button again.

◁ The display message in the instrument cluster goes out. The chassis lowers or rises to driving level.

◁ When the chassis is raised or lowered to the normal driving level, the indicator lamp in the instrument cluster goes out.

The instrument cluster shows a display message if the speed at manoeuvring level is too high.

Manoeuvring level is deactivated automatically in the following cases:

- The chassis is lowered or raised manually.
- Raised or normal driving level is set.
- The button STOP on the control panel or the button STOP in the multimedia system is pressed.

Additional axles

Notes on starting-off aid

Note

Damage to tyres and axles due to prolonged use of the starting-off aid

The starting-off aid is only intended for short-term use if the vehicle's wheels are spinning on a slippery carriageway. The axle load on the rear axle is increased when the starting-off aid is switched on. Using the starting-off aid over an extended period of time may damage the rear axle and the wheels.

► Make sure that the starting-off aid is only switched on for a short time.

The starting-off aid can also be fitted with a limit speed or a time limit (reactivation lockout).

► If the starting-off aid has no time limit, make sure that the starting-off aid is only switched on for a short time.

The starting-off aid with limit speed switches itself off automatically at a speed above 30 km/h. The starting-off aid can only be switched on again at a speed below 30 km/h.

The starting-off aid with reactivation lockout switches itself off automatically after 90 seconds. After 50 seconds, the starting-off aid with reactivation lockout can be switched on again.

The starting-off aid without reactivation lockout switches itself off automatically after 120 seconds and can be switched on again immediately.

Switching starting-off aid on/off

- **Switching starting-off aid on:** In the multimedia system, in the Functions menu, select the Switch menu item.
- Press the button in the multimedia system.
  - ◁ As long as the starting-off aid is switched on, the indicator lamp in the status area of the instrument cluster lights up.

Note

If the starting-off aid has no time limit, stop the starting-off aid manually after a short time.

- **Ending the starting-off aid manually:** Press the button again.

or

- Press the STOP button on the operating unit of the level control (→ Page 331).
  - ◁ The indicator lamp in the status area of the instrument cluster goes out.

Raising/lowering the leading/trailing axle

Note

Reducing rolling resistance by raising the leading and trailing axle

Raising the leading and trailing axles reduces rolling resistance. This reduces tyre wear and fuel consumption.

- Raise the leading/trailing axle if it is not required.

Note

The leading/trailing axle is lowered shortly before the permissible axle load is reached. Observe the instructions in the "Axle and wheel loads" section (→ Page 262) and on the vehicle identification plate (→ Page 518).

In vehicles for large capacity transport, the trailing axle can only have its load reduce, it cannot be raised.

Vehicles with steered trailing axle: When the additional axle is raised, the wheels steer in a straight-ahead position. When the additional axle is lowered again, the wheels steer again.

- Start the vehicle.
- Wait until there is sufficient supply pressure in the compressed-air system.
- If the vehicle is empty or only partially laden, raise the leading/trailing axle before pulling away.

- Vehicles with a rear loading crane body: Before raising the leading/trailing axle, refer to the body manufacturer's operating instructions.
- When loading or unloading the vehicle, lower the leading/trailing axle.
- **Raising/lowering:** In the multimedia system, under the menu Functions, menu item Switch, press button .
  - ◁ When the leading/trailing axle is being raised, the indicator lamp (trailing axle) or (leading axle) lights up in the status area of the instrument cluster.

Vehicles with four air-sprung axles: The trailing axle is lowered automatically when the parking brake is applied. This increases the braking effect. The indicator lamp on the instrument cluster flashes for the short duration of the lowering process.

If the trailing axle does not lower, the indicator lamp flashes continuously when the vehicle has been switched on. After the key has been removed from the ignition lock, the indicator lamp flashes for another ten minutes and then goes out.

- If the trailing axle does not lower, use chocks to prevent the vehicle from rolling away and have it checked immediately by a qualified specialist workshop.

Using steerable additional axle

Notes

Note

At outside temperatures below -30 °C, a low-temperature resistant steering oil must be used for the steerable additional axle. Otherwise, fault-free operation cannot be ensured.

Observe the notes on operating fluids (→ Page 527).

To centre manually

Note

Damage to the tyres of vehicles with steerable additional axle

There is a risk of damaging the tyres if vehicles with steerable additional axles are manoeuvred on kerbs or pass through narrow passages.

- In such cases, centre the steering of the additional axle.

- Start the vehicle.
- In menu Functions, menu item Switch of the multimedia system, press button .
  - ◁ The steering of the additional axle is centred. The wheels of the additional axle steer in a straight-ahead position. When the indicator lamp on the instrument cluster lights up, the additional axle is centred.

To release the steering function

- Press the button again.

◁ When the [ ] indicator lamp on the instrument cluster goes out, the steering function of the additional axle is activated. The additional axle co-steers again.

If the steered additional axle is faulty or no longer steers, the instrument cluster displays a corresponding display message and the [ ] indicator lamp on the instrument cluster lights up.

If the [ ] indicator lamp lights up grey on the instrument cluster, the steering angle difference between the wheels of the front axle on full lock and the steered additional axle is excessive. For example, the vehicle has been parked with its steering on full lock. The steerable additional axle does not co-steer.

► Turn the multifunction steering wheel to the left and right as far as it will go.

◁ The steered additional axle is picked up when the steering wheel is turned. The additional axle co-steers again. The [ ] indicator lamp in the instrument cluster goes out.

or

► Pull away slowly.

◁ The additional axle co-steers again. The [ ] indicator lamp in the instrument cluster goes out.

Driving tips

General driving tips

Danger

Risk of accident when the vehicle is switched off while driving

If during an emergency you switch off the vehicle while you are driving, safety-relevant functions will be restricted or no longer available.

This may affect the power steering system and the brake force boosting, for example.

You will then need to exert considerably more power when steering and braking, for example.

► For this reason alone, you should never switch off the vehicle while you are driving.

Danger

Risk of accident on uphill or downhill slopes

The parking brake may not be sufficient to secure the vehicle on uphill and downhill slopes.

A loaded vehicle or a vehicle with a trailer/semitrailer may roll away.

► In the check position, check whether the braking force of the parking brake alone is sufficient to hold the complete vehicle.

► Generally, secure the towing vehicle and trailer/semitrailer with the parking brake and, additionally, with chocks.

Using an underride guard

Danger

Risk of fatal injuries due to underride guard being folded up while the vehicle is in motion

A vehicle could become trapped underneath the chassis in the event of a rear-end collision.

There is a risk of death for the occupants of the vehicle colliding from behind.

- Fold the underride guard down and lock it in place when driving on public roads.

If a higher angle of approach/departure is required during off-road driving:

- Fold up the underride guard.

Folding underride guard – tipper vehicle with steel suspension

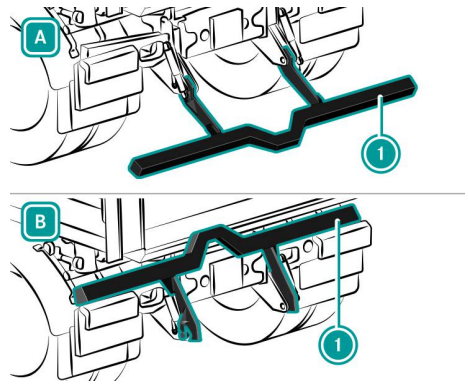

Underride guard

A Road position

B Off-road position/ road paver mode position

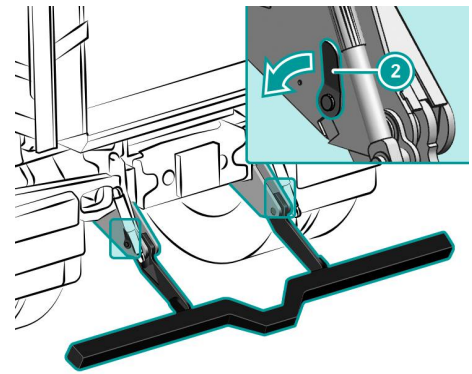

- **To fold up:** Push the left and right levers (2) in the direction of the arrow and swing the underride guard (1) upwards.
  - ◁ The underride guard (1) swings up to the end stop with the support of the pneumatic springs and is held there magnetically.
- **To fold down:** Push the underride guard (1) down with force to release it from the retaining magnets.
  - ◁ The underride guard swings down and the levers (2) engage automatically.

Folding underride guard – tipper vehicle with air suspension

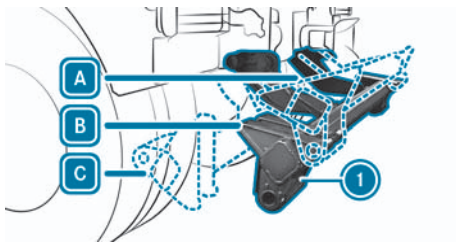

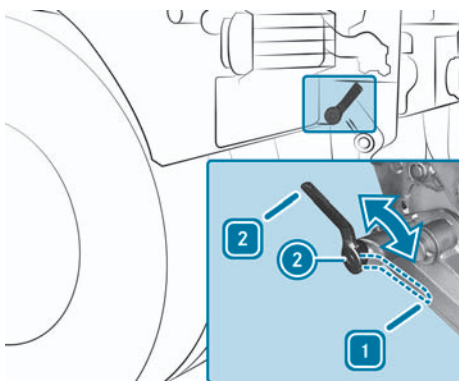

Example: lever, left-hand side of the vehicle

Underride guard

A Off-road position

B Road position

C Road paver operation position

- ► Hold the underride guard (1) in place.
- ► Swing both levers (2) into position 2.
  - ◁ The underride guard (1) will be released.
- ► Swing the underride guard (1) into the desired position and hold it in place.
- ► Swing both levers (2) into position 1 and release the underride guard (1).
  - ◁ The underride guard (1) is locked.

Note

If you swing the underride guard (1) into the road paver mode position C, leave both levers (2) in position 2.

Road paver mode

Preparing road paver mode

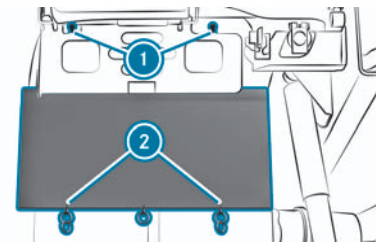

Example: mud flap, left-hand side of vehicle

- ► Set the underride guard to the road paver mode position.
- ► Swing both mud flaps up over the licence plate holder.
- ► Attach the rings (2) on the mud flaps to the hooks (1) on the licence plate holder.

Notes on road paver mode

Tipper with steel suspension

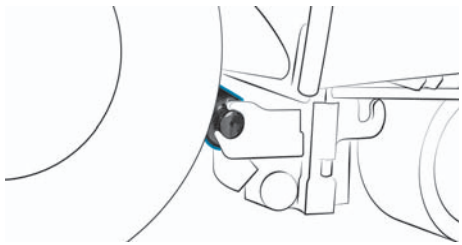

Tipper with steel suspension in road paver mode (overrun mode)

- Do not use the parking brake when in overrun mode and only perform slight braking adjustments using the service brake.

Tipper with air suspension

Danger

Risk of entrapment between tyre and underride guard

If the underride guard is pushed against the tyre, persons in the space between the tyre and underride guard could become trapped.

- Make sure that nobody is in the space between the tyre and underride guard.

Note

Damage due to locked underride guard in road paver mode

In road paver mode, the underride guard must be able to swing freely to avoid damage to the vehicle frame and underride guard.

- Unlock the underride guard.

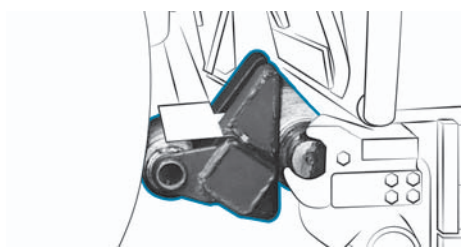

Tipper with air suspension in road paver mode (overrun mode)

In road paver mode, the road paver presses rollers on the underride guard against the tyres. This causes the vehicle to be pushed forwards at the speed of the road finishing machine.

- Switch the level control system to road paver mode (→ Page 337).

For most road pavers, the optimal road paver roller position is preset. The road paver rollers should touch the approach plate roughly in the centre.

- Do not use the parking brake when in overrun mode and only perform slight braking adjustments using the service brake.

The vehicle's level will be adjusted automatically. If the road paver rollers do not touch the centre of the approach plate, a different driving level can be set before power take-off is activated (→ Page 330).

Off-road driving

Notes on driving off-road

Danger

Risk of injury due to acceleration forces when driving off-road

You could be thrown out of your seat, for example.

- Always fasten your seat belt, including when driving off-road.

Danger

Risk of fire due to flammable material coming into contact with hot parts of the exhaust system

Flammable material such as leaves, grass or twigs may ignite if they come into contact with hot parts of the exhaust system.

- When driving off-road or on unpaved surfaces, check the underside of the vehicle at regular intervals.
- In particular, remove any trapped parts of plants or other flammable material.
- If damage should occur, immediately inform a qualified workshop.

Note

Damage to the differential gear caused by drive wheels spinning on one side

The differential may be damaged by the different wheel speeds of the drive wheels.

- Plan ahead when engaging the differential locks.

When driving off-road, substances such as dirt, sand, mud and water, at times mixed with oil, may get into the brakes. This can lead to a reduced braking effect or to a total failure of the brakes, also due to increased wear. The braking characteristics change depending on the material that has penetrated. Clean the brakes after driving off-road. If you then notice reduced braking effect or hear grinding noises, have the brake system checked at a qualified workshop. Adjust your driving style to the changed braking characteristics.

Driving off-road demands special driving skills and concentration. Furthermore, the driver has a particular duty of care when driving off-road and before rejoining public roads again. Please make sure you read this section thoroughly before attempting to drive the vehicle off-road. Daimler Truck AG recommends that you practise driving off road over less demanding terrain. When driving on difficult terrain for the first time, ask an experienced off-road driver to accompany and advise you.

Driving systems for driving off-road

The following driving systems and equipment help you to drive the vehicle off-road safely:

- Differential locks (→ Page 268)
- Transfer case (→ Page 272)

Checklist before driving off-road

- Check the fuel and AdBlue® levels and top up if necessary (→ Page 365).

- **Engine:** Check the engine oil level and top up if necessary (→ Page 436). Before driving up or down extreme inclines or slopes, top up the engine oil to the maximum level.

Note

When driving up or down extreme inclines or slopes, the symbol may appear on the instrument cluster. The engine operating safety is not put at risk if you have filled the engine oil to the maximum level before the journey.

- **Automatic transmission:** Check the oil level and top up (→ Page 437).

Note

Before driving up or down extreme inclines or slopes, top up the engine oil to the maximum level.

- **Vehicle tool kit:** Check that the jack is working (→ Page 451).
- Make sure that a wheel spanner, wooden underlay for the jack, a robust tow rope and a folding spade are carried in the vehicle.
- **Wheels and tyres:** Check the tyre tread depth (→ Page 502) and tyre pressure (→ Page 504).
- **Driver's seat:** Block the horizontal suspension.
- **Mud flaps:** Fold the mud flaps up and attach.
- **Folding underride guard:** Fold the underride guard to the off-road position (→ Page 344).

Rules for driving off-road

Danger

Risk of injury to hands when driving over obstacles

If you drive over obstacles or drive into track grooves, the steering wheel may move abruptly of its own accord.

- Hold the steering wheel firmly with both hands at all times.
- Always hold the steering wheel such that your thumbs are on the outer side of the steering wheel rim.
- When driving over obstacles, be prepared to briefly use more force when steering, if necessary.

Danger

Risk of accident when the differential lock is engaged

When driving off-road or driving with an engaged differential lock in the automatic drive program, the electronic management system may perform unwanted gear changes.

The vehicle may, for example, roll backwards on slopes.

- Always drive carefully and be ready to brake.
- Switch to the manual drive program.

On uphill and downhill slopes, always follow the line of fall and avoid shifting gear. Drive up slopes without stopping until you are at the top of the hill. If your vehicle is unable to cope with the slope, stop the vehicle. Shift into reverse gear and allow the vehicle to slowly roll backwards.

Vehicles with automated manual transmission: When crawler mode is engaged, the vehicle automatically crawls forwards after the service brake has been released, and continues to roll at idle speed (→ Page 253).

Select the **offroad** shift program adapted for off-road driving. This enables you to initiate the gear selection process manually, according to the driving conditions, and to avoid interruptions in the tractive power.

Vehicles with level control: leave the chassis set to driving level (→ Page 334). Raise the chassis frame only when necessary and always for a short time only, e.g. to drive over a steep crest. When you raise the chassis, traction is impaired.

Also observe the following points:

- Securely stow away all loose objects.
- Securely fasten the load.
- Secure bulk material (e.g. sand or gravel) with wall extenders or covers to prevent it slipping.
- Secure bodies and implements, such as tipper bodies or loading cranes, against inadvertent activation and movement. Observe the operating instructions given by the body and equipment manufacturer.
- Close the side windows.
- Disengage Stability Control Assist (→ Page 268).
- Engage the differential lock if the traction is insufficient (→ Page 268).
- Vehicles with automated manual transmission: Activate the rocking-free function to rock the vehicle free from a deep rut.
- Always drive with a gear engaged and do not switch off the vehicle while the vehicle is moving.
- Drive slowly and smoothly. It may often be necessary to drive at walking pace.
- Make sure that the wheels remain in contact with the ground.
- Drive with extreme care across unknown terrain where you can only see for a short distance. As a precaution, first get out of the vehicle and take a look at the route to be taken.
- Watch out for obstacles such as rocks, holes, tree stumps and ruts.
- If possible, always drive over obstacles with the wheels of one side of the vehicle. This means damage to the vehicle is avoided.

Driving on downhill slopes

Danger

Risk of accident if the line of fall is not followed on slopes

If you drive at a slant angle or turn on a slope, the vehicle may slide sideways, tip over or overturn.

► Always follow the line of fall when you are driving up a slope (in a straight line upwards or downwards) and do not turn.

Note

Do not shift the transmission to neutral on downhill slopes.

- When driving the vehicle up or down a slope if it begins to tip over, steer the vehicle into the line of fall immediately. Only drive over embankments and on slopes along the line of fall.
- Only brake once the vehicle is on the line of fall.
- Depress the brake pedal if the engine's braking effect is insufficient when driving downhill.

Preparing for fording

A vehicle's fording capability depends upon various factors, such as:

- the type of vehicle
- the frame height of the chassis
- the tyres

The fording depths listed below are only examples and are meant to provide an overview. They apply to slow fording at a constant speed between 5 km/h and max. 10 km/h.

If in doubt, or in the case of special-purpose vehicles, consult an authorised Mercedes-Benz Trucks Service Centre before a possible fording.

Permissible fording depths for vehicles in road use without all-wheel drive:

- Road vehicles with a low vehicle frame and 315/60 R 22.5 tyres up to maximum 200 mm
- Construction vehicles with 315/80 R 22.5 tyres from 300 mm up to maximum 500 mm
- Other road vehicles with 315/80 R 22.5 tyres up to maximum 300 mm
- Other road vehicles with oversized tyres, e.g. 12 R 24 or 14 R 20 up to maximum 600 mm

Permissible fording depths for fording with all-wheel drive vehicles:

- Without fording equipment, with 13 R 22.5 tyres up to maximum 700 mm
- With fording equipment, up to maximum 1200 mm

On vehicles with fording equipment, a plate with the details of the vehicle-specific permissible fording depth can be found on the driver's door or on the cockpit.

Note

Fording as described here applies exclusively to off-road and all-wheel-drive vehicles.

Observe the following points while preparing:

- Determine and observe the maximum permissible fording depth of the vehicle.
- Determine the water depth and the characteristics of the surface condition under the water. As a precaution, have a closer look on foot.
- Switch off the auxiliary heating (→ Page 155).
- wait for the auxiliary heating run-on phase to end

- Activate the regeneration lockout (→ Page 356).

Driving through water

Fording

Note

Damage to vehicle parts due to bow wave created at the front of the vehicle

Driving too fast into water can cause vehicle parts to be damaged by the resulting bow wave created at the front of the vehicle.

► Drive slowly into bodies of water.

► Commence fording at walking pace in shallow water.

► Adapt your driving style to the environment.

► Drive through the water at a constant speed between 5 km/h and max. 10 km/h.

► Do not declutch, change gear or stop while driving.

Note

Pulling away in water is difficult due to the strong driving resistance and low traction.

► If necessary, plan ahead and engage the differential locks (→ Page 268).

► Ensure that no bow wave forms while driving.

► Do not switch off the vehicle when it is standing in water.

► If the vehicle cuts out while in the water, start it again immediately.

After fording

► If the terrain characteristics permit, dry the brakes with short braking manoeuvres.

► Drive on or leave the vehicle switched on for a few minutes.

◁ The engine compartment is dried.

► Once you have returned to a paved surface, observe the checklist for after off-road driving (→ Page 351).

Driving on sand

Loose sand is a particularly treacherous surface for off-road driving.

► Drive quickly to overcome rolling resistance.

► Drive in the tyre tracks of vehicles ahead.

► Pay attention to the vehicle's ground clearance in the case of deep grooves.

Checklist after driving off-road

Note

Damage caused by foreign objects, e.g. stones, plant matter or twigs

Fuel lines, brake hoses, axle joints, drive shafts or other components on the vehicle can be damaged by trapped foreign objects.

► Remove trapped foreign objects immediately after driving off-road.

► Engage the ASR (→ Page 266) or Stability Control Assist (→ Page 268).

- ▶ Disengage the differential lock (→ Page 268).
- ▶ Disengage the regeneration lockout (→ Page 356).
- ▶ Vehicles with automated manual transmission: Select a drive program for on-road driving (→ Page 251).
- ▶ Test the brakes.
- ▶ Check the headlamps and tail lamps for damage.
- ▶ Check for damage to the tyres.
- ▶ Replace dented or damaged wheels.
- ▶ Replace missing valve caps and valve extensions.
- ▶ Check and adjust the tyre pressure (→ Page 504).
- ▶ Check the entire vehicle underside, brakes, steering, suspension and exhaust system for damage.
- ▶ Check the engine oil level.
- ▶ Move the folding underride guard to the on-road position (→ Page 344).
- ▶ Fold down the mud flaps.
- ▶ Observe the notes on cleaning after driving off-road or in roadworks.

Information on cleaning after driving off-road or in roadworks

Observe the notes on cleaning the exterior (→ Page 415) and notes on using a high-pressure cleaner (→ Page 414).

Foreign bodies that have become trapped can be expelled while the vehicle is in motion, e.g. stones caught in the tyre treads or between the wheels (twin tyres). This could cause other road users to be injured or vehicles to be damaged.

Each time after driving off-road or in roadworks, check the tyres for trapped foreign bodies and remove before driving on public roads. Dirt and mud on the tyres and on the roadway reduce grip, particularly if the roadway is wet. This may cause your vehicle to start to skid. For this reason, always clean your vehicle carefully after every off-road journey or trip in roadworks and before journeys on public roads.

Clean the following vehicle parts:

- Lighting system
- side windows and windscreen
- Outside mirrors
- Steps
- Entrances
- Grab handles
- Wheels and tyres
- wheel well and wing
- Steering
- Axles
- Brakes
- Spring elements
- Chassis
- Licence plate
- Engine
- Radiator
- Transmission
- Oil cooler (transmission)

Observe the following points after operation in mud, sand, water or after exposure to similar dirty conditions:

- clean the brake discs, brake pads, wheels and axle joints and check them for damage.
- Lubricate the axle joints.
- Lubricate the drive shaft.
- Test the brakes while paying attention to the road and traffic conditions.

Economical and environmentally aware driving

Vehicle version

The following components affect fuel consumption:

- tyres, e.g. tyre pressure, tyre condition, tyre size
- body and cab version, e.g. open platform, box body, platform with cover
- drive train, major assemblies and the number of axles
- ratio of the assembly units, e.g. transmission and axle ratio
- ancillary units, e.g. air-conditioning system, auxiliary heating, power take-offs

Operating conditions

The following operating conditions affect fuel consumption:

- topography, e.g. driving on level routes or in mountainous terrain
- outside temperature and weather conditions
- operating conditions, e.g. operation on construction sites, long-distance or short-distance driving
- gross vehicle weight
- Regeneration of the diesel particulate filter

When the vehicle is in new condition, regeneration of the diesel particulate filter is carried out more frequently than at later stages in the vehicle's operating life, as a result of the running-in process.

Maintenance

Fuel consumption and major assembly wear depend on regular maintenance. Regular maintenance of the vehicle increases road safety and lowers fuel consumption. Observe the maintenance intervals. Always have maintenance work carried out at a qualified workshop.

Fuel type

Use of lower fuel grades and/or non-approved fuel additives will increase fuel consumption.

Ensure that you refuel with the appropriate fuel grade (→ Page 531).

Driving resistance

The main forms of driving resistance are ramp, roll and air resistance. Driving resistance changes depending on e.g. vehicle weight and vehicle speed. Remember that driving resistance increases with vehicle speed.

Note

Tyres:

To make optimum use of potential CO_2 and fuel savings , Daimler Truck AG recommends using energy-efficient tyres that comply with all applicable legal regulations of the countries in which the vehicle is operated. An unnecessarily deep tyre tread increases rolling resistance.

Note

Trailer/semitrailer:

To make optimum use of potential CO_2 and fuel savings, Daimler Truck AG recommends using a trailer/semitrailer with optimised consumption.

Rolling resistance

Rolling resistance and therefore fuel consumption are affected by the following factors:

- tyre size and tyre type
- tyre pressure, e.g. correctly set tyre pressure reduces fuel consumption
  Check the tyre pressure at regular intervals (→ Page 504).
- tyre type, e.g. summer or winter tyres, single or twin tyres
- tyre tread and tyre width, e.g. thick tyre treads, such as those on winter tyres, increase fuel consumption
- load distribution, e.g. an even load distribution not only increases driving safety, but also tyre life
  Observe the notes on the permissible wheel- and axle loads (→ Page 262) and the information on the vehicle identification plate (→ Page 518).
- road and weather conditions, e.g. wet or soft carriageway (snow or rain) increase fuel consumption

Aerodynamics

Air turbulence increases aerodynamic drag and therefore fuel consumption. Air turbulences particularly occur around additionally installed accessories, e.g. additional headlamps.

Note

To reduce fuel consumption and CO_2 emissions, the semitrailer should be adjusted so that the rear edge of the semitrailer is lower than its front edge. The semitrailer must, of course, always be adjusted in such a way that the tractor/trailer configuration complies with all applicable legal regulations of the countries in which the vehicle is operated. Furthermore, when adjusting the semitrailer, all specifications of the respective semitrailer manufacturer must be followed.

Set the wind deflector to the correct height of the body/semitrailer (→ Page 388).

With open loads, arrange the load so that there are no gaps.

Cover the load with a tarpaulin and securely lash down all tarpaulins on the tractor/trailer combination.

Fuel-efficient driving style

Note

Using the air-conditioning system increases the fuel consumption

Your fuel consumption will increase if the air-conditioning system or the automatic climate control is switched on.

- ► Only switch this function on if required.

The display in the instrument cluster menu ECO support helps you to

optimise your driving style and develop fuel-saving driving habits.

You can keep fuel consumption at low levels by adopting the following driving style:

- Leave PPC switched on (→ Page 290).
- Do not depress the accelerator when starting the vehicle.
- Avoid frequent cold starts.
- Do not warm up the vehicle while stationary.
- Switch off the vehicle in stationary traffic.
- Avoid frequent and heavy acceleration.
- Avoid heavy braking by adopting an anticipatory driving style.
- Drive in an even and smooth manner.
- Use the cruise control (→ Page 278) and Proximity Control Assist (→ Page 281) driving systems.
- Maintain an economical engine speed (green area of the rev counter) (→ Page 160).
- Avoid speed peaks.
- Avoid frequent speed changes, in particular at high speeds.
- Whenever possible, drive using the automatic drive program.
- Shift gears according to requirements.
- Avoid frequent gear changes.

Notes on the diesel particulate filter

BlueTec® 6 vehicles are equipped with a diesel particulate filter.

Danger

Risk of fire from hot exhaust system components

Flammable materials, such as leaves, grass or twigs, may ignite.

- ▶ Park the vehicle such that no flammable materials can come into contact with hot vehicle parts.
- ▶ In particular, do not park on dry grassland or harvested grain fields.

Note

Damage due to hot exhaust gases

Very hot exhaust gases emerge from the tailpipe during automatic and manual regeneration.

- ▶ Keep a minimum distance of one metre away from other objects, such as parked vehicles.

Activate regeneration lockout if regeneration lasts longer than three hours during a journey (→ Page 356).

If too many particles accumulate in the diesel particulate filter, the indicator lamp in the instrument cluster will come on. A display message prompts you to start manual regeneration (→ Page 357). Manual regeneration lasts about 30 minutes to 60 minutes.

Note

If you drive the vehicle predominantly over short distances or with low loads, the regeneration time may be considerably longer. This increases fuel consumption and can negatively affect the exhaust system functionality.

If you do not observe the display messages, the engine output may be reduced and it might be necessary to change the diesel particulate filter.

Filter change

Danger

Risk of poisoning from soot particles

Touching and breathing in soot particles is hazardous to health.

- ► Have the diesel particulate filter replaced at a qualified workshop.

Automatic regeneration

Automatic regeneration of the diesel particulate filter is performed when the green indicator lamp in the instrument cluster comes on.

Automatic regeneration is only performed while driving.

Automatic regeneration only starts when all operating conditions have been met, e.g. sufficiently high engine oil and coolant temperature. If an operating condition is no longer fulfilled while regeneration is in process, the indicator lamp will go out and the regeneration process will be aborted. Once all operating conditions are fulfilled again, the regeneration will start again automatically. Therefore, avoid making interruptions to your journey while the indicator lamp is on.

Note

The engine noise and the idle speed may change during regeneration.

Activating and deactivating regeneration lockout of the diesel particulate filter

Switch on the regeneration lockout to avoid increased exhaust gas temperatures when regenerating the diesel particulate filter.

This is necessary in the following cases, for example:

- When driving into a danger zone.
- When performing work with dry or flammable materials resulting in a heavy build-up of dirt on the vehicle.

Automatic and manual regeneration cannot start and a running regeneration is cancelled.

Activate regeneration lockout only for the duration of the hazard. When regeneration lockout is switched on, regeneration is disabled even if the vehicle is started again. In this case, the instrument cluster shows the display message Regeneration locked.

Note

Regeneration can be disabled via the multimedia system. Regeneration lockout is only switched on or off using button [OFF] on the instrument panel of vehicles for transporting hazardous materials or with the **fire-sv** shift program.

- In menu Functions, menu item Switch of the multimedia system, press button [OFF].
  - ◁ If the indicator lamp on the [OFF] button comes on, regeneration is disabled.

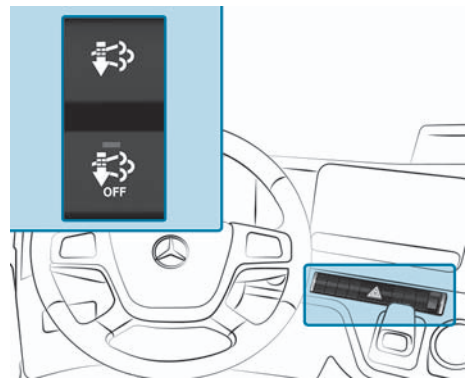

Vehicles with ADR classification or with the fire-sv shift program

- **Lock with button:** Press the [OFF] button on the instrument panel below.
  - ◁ If the indicator lamp on the [OFF] button comes on, regeneration is disabled.

Starting manual regeneration of the diesel particulate filter

Only vehicles with ADR classification or with the fire-sv shift program

Manual regeneration can only be started under the following conditions:

- If display messages have prompted to do so.
- When regeneration lockout is not switched on.
- If an automatic regeneration has already been triggered (the [icon] indicator lamp is on).

Note

Manual regeneration can be started via the multimedia system. Manual regeneration is started via the button only in vehicles for transporting hazardous materials or with the **fire-sv** shift program.

- Park the vehicle safely and leave it switched on. While doing so, maintain a distance of at least a metre from other vehicles, objects and all flammable materials.
- Apply the parking brake.
- Shift the transmission into neutral N.
- Take your foot off the accelerator pedal.
- In menu Functions, menu item Switch of the multimedia system, press button .

or

- Vehicles with ADR classification or fire–sv shift program: Press button for about three seconds.

◁ The indicator lamp on the instrument cluster will come on.

Manual regeneration will only start when the following conditions have been met:

- The engine oil and coolant temperature is sufficiently high.
- The AdBlue® is not frozen.
- The system is functioning error-free.

Note

The engine speed is increased and the engine noise may change during regeneration.

When regeneration is complete, the indicator lamp on the instrument cluster will go out and the engine speed will reduce to the idle speed.

Regeneration is cancelled automatically in the following cases:

- The multifunction lever is in position D or R.
- The parking brake is released.
- The regeneration lockout is switched on.
- Power take-off is switched on.

After regeneration is cancelled, the engine speed will reduce to the idle speed.

Note

If at low outside temperatures, the on-board computer prompts you to perform manual regeneration, start regeneration before parking the vehicle. If the vehicle is parked without performing regeneration, manual regeneration can only be started after the vehicle warm-up phase.

If AdBlue® is frozen and/or the vehicle has been parked without regeneration, manual regeneration can only start after a thawing time of up to 60 minutes.

Fuel consumption

Fuel consumption depends on the following factors:

- The vehicle version
- The operating conditions
- Maintenance
- The fuel type in use
- Driving resistance

- Your driving style

For these reasons, it is not possible to provide precise information on fuel consumption for each individual vehicle.

Information and notes on how to keep fuel consumption low can be found in the section on "Economic and environmentally aware driving" (→ Page 353).

Note

Details about average fuel consumption are displayed by the instrument cluster in the menu Range/consumption.

Oil consumption

For an engine that has been run in, oil consumption can amount to up to 0.2% of the actual fuel consumption.

The oil consumption may exceed this value if you operate your vehicle under arduous operating conditions or if the mileage is high.

Limiting speed

Danger

Risk of the tractor/trailer combination swaying due to increased speed

You could lose control of the trailer/tractor combination.

The tractor/trailer combination may even tip over.

- ▶ Do not attempt to stretch the tractor/trailer combination by increasing the speed.
- ▶ Reduce the speed and do not counter-steer.
- ▶ Brake if necessary.

On vehicles with a speed limit, the maximum speed of the vehicle is limited according to national legal requirements, e.g. to approximately 90 km/h. The engine speed is automatically limited when the top speed is reached. Take this into account when overtaking.

Reverse warning device

Notes on the reverse warning device

Danger

Risk of accident from persons or objects in the manoeuvring area

Other road users may not hear or may ignore the warning tone issued by the reverse warning device. There is a risk of accident!

- ▶ Make sure that no persons or objects are within the manoeuvring range when manoeuvring.
- ▶ If necessary, a second person must assist you when manoeuvring.

The reversing warning system is designed to help you ensure the safety of other road users.

When using the reverse warning system described here, observe the legal requirements for the country where you currently are.

When you switch on the vehicle and engage reverse gear, the reverse warning device is activated and always set to loud.

Switch the reversing warning system on and off

- **To switch the reversing warning system to loud, quiet, or off:** In the multimedia system, in the Functions menu, select the Switch menu item.
  - ◁ The icons on the button vary depending on the current system status.

Pressing this button changes the system status of the reverse warning device.

The different displays on the button have the following meaning:

- Reverse warning system switched off
- Reverse warning device muted
- Reverse warning device unmuted

If reverse gear has not been engaged, the muted setting of the reverse warning device remains active for around two minutes. After two minutes, the volume of the reverse warning device will be turned back up.

The reverse warning device can be deactivated regardless of whether reverse gear is engaged.

Vehicles with automatic activation of the hazard warning light system: The hazard warning lights are switched on when the reverse gear is engaged.

Using the reverse gear lock on waste collection vehicles

Waste collection vehicles only:

If the running boards in the rear area are subjected to a load, the vehicle speed is limited to a maximum of 30 km/h and the reverse gear lock is activated. The reverse gear lock prevents reverse gear being selected.

If the running boards in the rear area are loaded while reverse gear is engaged, a warning tone sounds and the vehicle switches off.

If the vehicle has been switched off by the reverse gear lock:

- Switch off the vehicle.
- Apply the parking brake.
- Shift the transmission to neutral.
- Restart the vehicle.

Notes on the warning tone

Note

Damage to the engine due to disregarding the warning tone

If a warning tone sounds and a red display message shows the symbol, the engine operating safety is jeopardised.

- Do not set the vehicle in motion, or park it up immediately, paying attention to the road and traffic conditions.

A warning tone will sound in the following cases:

- The driver's door is opened with the dipped beam switched on and the ignition lock in the radio position.
- The driver's door is opened with the side lights switched on and the vehicle switched off.
- The seat belt of the driver's seat is not fastened.
- The immobiliser is activated.
- The brake pedal is not depressed when the hill holder is activated and the vehicle is stationary.
- The vehicle is switched on and stationary for approximately nine minutes with a gear selected.
- Reverse gear is engaged.
- The key is removed from the ignition lock or the vehicle is switched off when the frequent-stop brake is activated and the parking brake is released.
- The maximum permissible engine speed is exceeded.
- The vehicle speed or engine speed is too high when making a gear change.
- The loading bay approach aid has detected that an obstacle is too close.
- The hazard warning light system is activated automatically, e.g. with maximum full-stop braking.
- When various driving systems issue warnings.

A warning tone sounds in addition to a display message in the instrument cluster in the following cases:

- The coolant level is too low or the maximum permissible coolant temperature of 112 °C is exceeded. This jeopardises the operating safety of the engine.
- There is a risk of overloading the clutch.
- Crawler mode has reached its operating limits and is automatically cancelled.
- The monitored fifth-wheel coupling is not engaged or the semitrailer is no longer detected.
- The tyre pressure monitoring system displays a tyre pressure loss warning.
- The vehicle is being driven faster than approximately 40 km/h with the manoeuvring level activated.
- The instrument cluster or the on-board computer is malfunctioning. Important operating information, maintenance information, or warning and indicator lamps can no longer be displayed.

Refuelling

Fuel and AdBlue® tank

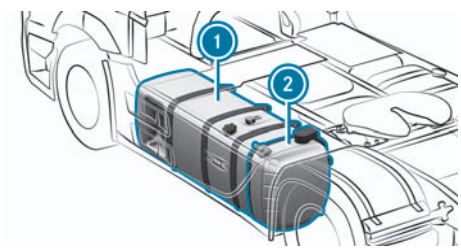

Exemplary representation

Fuel and AdBlue® tank

1 Fuel tank

② AdBlue® tank

Note

The positions of the fuel or AdBlue® tanks are dependent on the vehicle version.

Fuel

Notes on fuels

Danger

Risk of poisoning/chemical burns from fuels

Fuels are toxic and hazardous to health.

- Do not swallow fuel or let it come into contact with skin, eyes or clothing.
- Do not inhale fuel vapours.
- Keep children away from fuels.
- Keep doors and windows closed when refuelling.

Danger

Risk of poisoning/chemical burns from fuels

Fuels are toxic and hazardous to health.

If you or others come into contact with fuel, observe the following:

- Immediately rinse fuel off your skin with soap and water.
- If the fuel comes into contact with your eyes, immediately rinse them thoroughly with clean water. Seek medical attention immediately.
- Seek medical attention immediately if fuel has been ingested. Do not induce vomiting.
- Immediately change out of clothing which has come into contact with fuel.

Danger

Risk of fire or explosion from fuel

Fuels are highly flammable.

- Fire, naked flames, smoking and a formation of sparks must be avoided.
- Before refuelling, switch off the vehicle and, if present, the auxiliary heating.

Danger

Risk of fire or explosion from fuel

Fuels are highly flammable.

- Fire, naked flames, smoking and a formation of sparks must be avoided.
- Make sure that fuels do not come into contact with the hot exhaust system.
- Switch off the vehicle and the auxiliary heating before working on the fuel system.
- Always wear protective gloves.

Danger

Risk of fire and explosion due to electrostatic charge

Electrostatic charge may ignite fuel vapours.

- ► Before you open the fuel filler cap or take hold of the pump nozzle, touch the metallic vehicle body.
- ► To avoid a repeat build-up of electrostatic charge, do not get back into the vehicle during the refuelling process.

Danger

Risk of fire from fuel mixture

If you mix diesel fuel with petrol, the flash point of the fuel mixture is lower than that of pure diesel fuel.

- ► Do not refuel diesel engines with petrol.
- ► Do not mix petrol with diesel fuel.

BlueTec® 6 vehicles:

- ► Only refuel with commercially-available sulphur-free fuel that conforms to European standard EN 590 as of 2010 up to a max. sulphur content by weight of 0.001% (10 ppm).

The following fuel types are not permitted:

- Sulphurous fuel with a sulphur content over 0.001% by weight
- Marine diesel fuel
- Aviation turbine fuel
- Heating oils
- Biodiesel fuels in accordance with DIN EN 14214 (FAME (fatty acid methyl ester) and UCOME (used cooking oil methyl ester)

These fuel types cause irreversible damage to the engine and BlueTec® 6 exhaust gas after-treatment system and significantly reduce the expected service life.

BlueTec® 4 vehicles and BlueTec® 5 vehicles:

Diesel fuel must comply with European standard EN 590. This enables the engines to achieve both the specified performance and the emission levels legally prescribed by the Euro 4 or Euro 5 standards.

The use of fuels with a sulphur content over 0.005% by weight (50 ppm) reduces the life expectancy of the engine and exhaust system.

The following fuel types are not permitted:

- Sulphurous fuel with a sulphur content over 0.05% by weight
- Marine diesel fuel
- Aviation turbine fuel
- Heating oils
- Biodiesel fuel FAME (fatty acid methyl ester) > 7% vol. %
- Biodiesel fuel UCOME (Used Cooking Oil Methyl Ester)

Vehicles without BlueTec® exhaust gas aftertreatment

- ► Only refuel with commercially available sulphur-free diesel fuel that conforms to European standard EN 590 as of 2010 or a comparable national fuel standard.

This enables the engines to achieve both the specified performance and the emission levels legally prescribed by the Euro 3 standard.

The following fuel types are not permitted:

- OM 460: Sulphurous fuel with a sulphur content greater than 0.2% by weight (2000 ppm)
- OM 473: Sulphurous fuel with a sulphur content above 0.1% by weight (1000 ppm)
- Marine diesel fuel
- Aviation turbine fuel
- Heating oils
- Biodiesel fuel FAME (fatty acid methyl ester) > 7% vol. %
- Biodiesel fuel UCOME (Used Cooking Oil Methyl Ester)

Note

Damage to the engine due to incorrect fuel

The use of incorrect fuel may damage the engine and the fuel system. Even small amounts of petrol may damage the engine and the fuel system.

- ► Do not refuel with petrol.
- ► If you have refuelled with incorrect fuel, consult a qualified workshop.
- ► Have the fuel tank and fuel lines drained completely.

Note

Damage due to the mixing of fuel additives

If fuel additives are added to the diesel fuel or FAME fatty acid methyl ester, this may lead to malfunctions, catalytic converter damage and/or engine damage.

- ► Do not mix fuel additives.

Note

Malfunctions in the fuel supply due to contaminated fuel

Impurities may enter the fuel system from drums or canisters when refuelling. This can cause malfunctions in the fuel supply and in the fuel system.

- ► Before refuelling, filter the fuel if it is taken from drums or canisters.

Note

Environmental damage due to the improper handling of fuel

The improper handling of fuels presents hazards to people and the environment.

- ► Do not allow fuels to enter the sewage system, surface water, groundwater or the soil.

Note

Damage to the flap in the filler neck caused by a pump nozzle for a passenger vehicle

If a pump nozzle for a passenger vehicle is used, the flap in the filler neck can be damaged. If the pump nozzle for a passenger vehicle is inserted too deeply into the filler neck, a lug may catch on the flap in the filler neck.

- ► Use dedicated truck pump nozzles for refuelling.
- ► If a pump nozzle for a passenger vehicle must be used: Insert the nozzle only so far into the filler neck

so that it hooks onto the rim of the filler neck with one of its lugs.

- If the passenger vehicle pump nozzle is caught, loosen it by turning or tilting the pump nozzle.

You can find further information on fuel in the section "Operating fluids" (→ Page 531).

Filling order

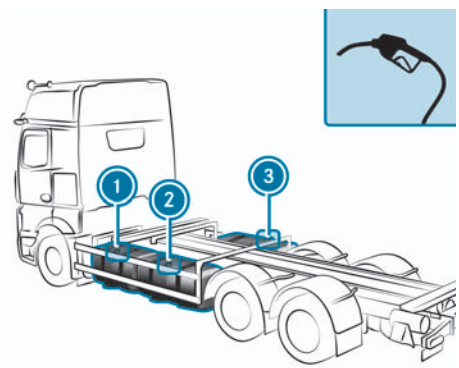

On vehicles with an additional fuel tank, you must observe the filling sequence. If the filling order is not adhered to, the fuel display and the range in the instrument cluster will not be displayed correctly.

- First, fill up the fuel tank ① (main tank) on the left of the vehicle directly behind the cab.
- Once the main tank has been completely filled, fill up the additional fuel tank ② on the left of the vehicle.
- Only fill the additional fuel tank ③ on the right of the vehicle once all tanks on the left of the vehicle have been completely filled.

If the main tank has run dry, the instrument cluster will show a corresponding display message Fully refuel the main tank first.

Refuelling the vehicle

Requirements

- Vehicle is switched off.
- The parking brake is applied.
- The auxiliary heating is switched off (→ Page 155).
- Vehicles with mechanical ignition lock: The key is removed from the ignition lock.

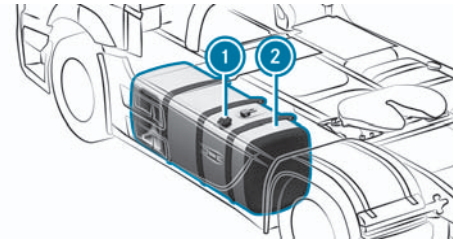

Example: Fuel tank

- Observe filling sequence (→ Page 365).
- If necessary, swing the side trim outwards (→ Page 396).
- Clean fuel filler cap ① to prevent dirt from penetrating the fuel when unscrewing fuel filler cap ①.
- Unlock filler cap ① on fuel tank ② with the mechanical key.
- Observe the fuel grade (→ Page 531).
- Completely insert the pump nozzle into the tank filler neck, hook in place and refuel.

- Replace fuel filler cap ① on fuel tank ② and tighten.
- Lock the fuel filler cap ① with the mechanical key.
- If necessary, swing back the side trim and lock it properly (→ Page 396).

Note

Regularly check the fuel prefilter with heated water separator for condensation (→ Page 460).

Using the folding ladder (Arocs street sweeper)

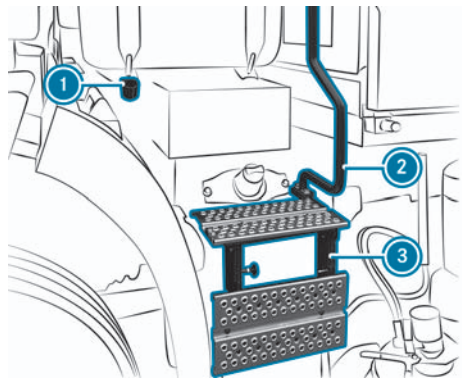

Folding ladder

① Holder for nozzle
② Grab handle
③ Folding ladder

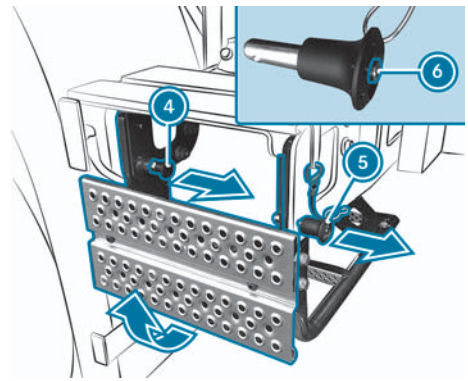

Folding ladder lock

④ Lock
⑤ Removable lock
⑥ Lock button

To refuel the vehicle, use the folding ladder ③ and the grab handle ②. Only use the folding ladder ③ when it is fully unfolded and both locks are engaged.

- Press the locking button ⑥ of the detachable lock ⑤ and pull out the lock.
- Pull the lock ④ out of the catch and hold it.

- Fold out the ladder in the direction of the arrow.
- When the ladder is folded out, engage the lock (4) in the catch.
- Press the detachable lock (5) into the catch and engage it.

Folding up and locking

- Press the locking button (6) of the detachable lock (5) and pull out the lock.
- Pull the lock (4) out of the catch and hold it.
- Fold up the ladder.
- Engage the lock (4) in the catch.
- Press the detachable lock (5) into the catch and engage it.

AdBlue®

Notes on AdBlue®

Note

Damage to the BlueTec® exhaust gas aftertreatment system

The BlueTec® exhaust gas aftertreatment can be damaged by diesel fuel, additives or impurities in AdBlue® as well as by diluting AdBlue®.

To prevent damage:

- Ensure that diesel fuel does not penetrate the AdBlue® tank.
- Always close the AdBlue® tank correctly.
- Do not mix additives with AdBlue®.
- Do not dilute AdBlue®.
- Only use AdBlue® in accordance with DIN 70070/ISO 22241.

Note

Paintwork damage caused by AdBlue®

If AdBlue® comes into contact with painted or aluminium surfaces when refuelling, these surfaces may be attacked.

- Immediately rinse the affected surfaces with plenty of water.

Note

Damage caused by overfilling the AdBlue® tank

If the AdBlue® tank is overfilled, it may be damaged at very low temperatures.

- Do not overfill the AdBlue® tank.

Note

Contamination from crystallised AdBlue® residues

AdBlue® residues crystallise after some time and can form a slippery surface. Depending on the extent and location of the contamination, it may impair safe footing, e.g. on steps.

- ► Immediately rinse surfaces covered in AdBlue® during refilling with water and remove the AdBlue® residue.
- ► AdBlue® can also be removed with a damp cloth and cold water.
- ► If the AdBlue® has already crystallised, use a sponge and cold water to clean it up.

When you open the AdBlue® tank, small amounts of ammonia vapour may escape.

Ammonia vapours have a pungent smell and are particularly irritating to the following body parts:

- Skin
- Mucous membranes
- Eyes

The vapours may cause a burning sensation in the eyes, nose and throat as well as irritation of the throat and watering eyes.

Do not inhale any escaping ammonia vapours. Only fill the AdBlue® tank in well-ventilated areas.

Prevent AdBlue® from coming into contact with your skin, eyes or clothing and do not swallow it. Keep AdBlue® away from children.

If you do come into contact with AdBlue®, observe the following:

- Wash AdBlue® off skin immediately with soap and water.
- If you get AdBlue® in your eyes, rinse them immediately and thoroughly with clean water. Seek medical attention immediately.
- If you swallowed AdBlue®, rinse your mouth immediately with water and drink plenty of water. Seek medical attention immediately.
- Immediately change clothes that have been soiled by AdBlue®.

AdBlue® is not topped up during maintenance work. Therefore, top up the tank regularly during vehicle operation or, at the latest, after the first corresponding display message in the instrument cluster.

You will find further information on AdBlue® in the "Operating fluids" section (→ Page 535).

Top up AdBlue®

Requirements

- Vehicle is switched off.
- The parking brake is applied.
- The auxiliary heating is switched off (→ Page 155).
- Vehicles with mechanical ignition lock: The key is removed from the ignition lock.

Before refilling AdBlue®

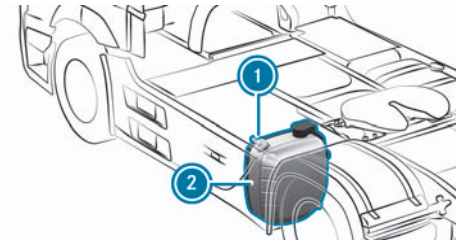

Exemplary representation

AdBlue® tank

1 Lid (blue)

2 AdBlue® tank

If the AdBlue® tank 2 still contains sufficient AdBlue®, a pressure compensation may arise when unscrewing the cap 1. This may cause AdBlue® to leak. Therefore, unscrew cap 1 of the AdBlue® tank 2 carefully. If AdBlue® spills out, immediately wash the affected area with plenty of water. A special filler neck prevents the AdBlue® tank 2 from being filled with diesel fuel by mistake.

Note

Depending on the vehicle equipment, the cap of the AdBlue® tank can be locked for security reasons.

- If necessary, swing the side trim outwards (→ Page 396).
- Clean cap 1 to prevent dirt from penetrating the AdBlue® when unscrewing the cap 1.
- If applicable: Unlock cap 1 with the separate key.
- Slowly turn cap 1 anti-clockwise and remove.

Top up AdBlue®

Note

Always refill to at least 10% of the AdBlue® tank capacity. Topping up with smaller amounts could result in malfunctions.

- Completely insert the pump nozzle into the tank filler neck, hook in place and refuel.
  - ◁ The pump nozzle switches off automatically.
- Put on the cap 1 and screw it on.
- If applicable: Lock cap 1 with the separate key.
- If necessary, swing back the side trim and lock it properly (→ Page 396).

Note

For refill containers, ensure that there is a way to make a drip-free connection to the vehicle filler neck.

Trailers/semitrailers

Notes on the trailer and fifth-wheel coupling

The trailer and fifth-wheel coupling is one of the vehicle components with particular importance for road safety. Please comply with every detail of the manufacturer's operating, care and maintenance instructions.

If you fit a trailer coupling, observe the body/equipment mounting directives.

If your semitrailer truck is equipped with a coupling ramp or coupling aid, the inclination slope specified in ISO°1726 cannot be guaranteed for all fifth-wheel leads. Note that the clearance between the semitrailer truck and the semitrailer may be restricted, and you must adapt your driving style accordingly. Always remove the mudguard centre parts before coupling up.

Note

Damage to the towing vehicle or the trailer or semitrailer due to falling below the minimum front axle load or due to incorrect coupling up

To avoid damage:

- Couple up a trailer or semitrailer only to a suitable trailer or fifth-wheel coupling.
- Ensure that there is sufficient clearance between the trailer and semitrailer and towing vehicle.
- If you drive the vehicle unladen, only couple up an unladen trailer.
- Do not exceed the permissible axle loads.
- Comply with the minimum front axle loads for the towing vehicle described below in order to ensure sufficient steerability of the towing vehicle.

Minimum front axle loads for towing vehicle

Comply with the following minimum front axle loads for the towing vehicle:

Towing vehicle	Front axle load
3-axle vehicles	25 %
2-axle vehicles (trailer lighter or equal in weight to the towing vehicle)	30 %
2-axle vehicles (trailer heavier than the towing vehicle)	35 %

If you drive with more than two trailers or semitrailers, you must deactivate Stability Control Assist (→ Page 268). Otherwise, malfunctions or faults can occur as a result.

Articulation angles

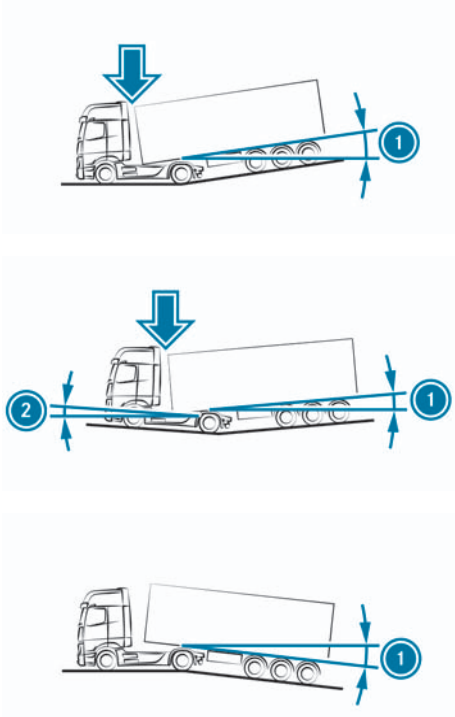

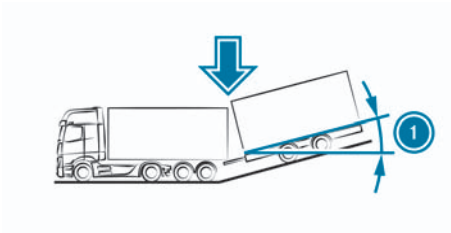

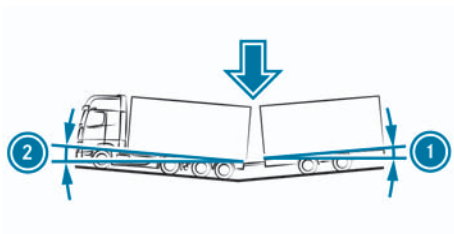

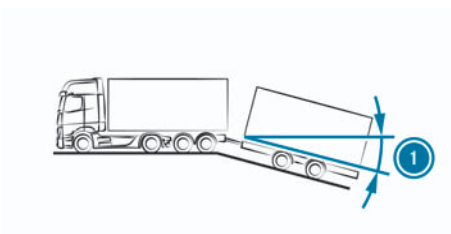

When you are driving over depressions or elevations, please be aware that the articulation angle at the front ② or rear ① will change.

Note

If the tractor/trailer combination jack-knifes, the clearance between the towing vehicle and the trailer/semitrailer will be reduced.

Articulation angles depend on the specific towing vehicle and trailer or semitrailer. They are affected by the following parameters:

- Wheelbase
- Body height
- Overhang
- Distance from the towing vehicle to the trailer or semitrailer

Swivel angle

Danger

Risk of accident if the swivel angle is exceeded

Cables, compressed air lines, and hydraulic lines can rip off during extreme cornering. The trailer hitch and the drawbar may get damaged too.

This may cause you to lose control of the vehicle or the trailer.

- ▶ Always pay attention to the swivel angle of the tractor/trailer combination when cornering.

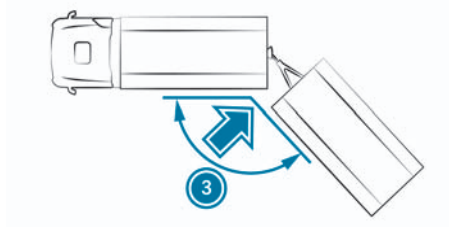

Towing vehicle and centre-axle trailer (example)

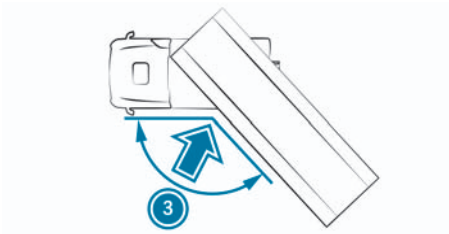

Towing vehicle and semitrailer (example)

Pay attention to the swivel angle ③ during tight cornering.

The swivel angle is dependent on the coupling system on the towing vehicle and trailer or semitrailer.

Coupling

Notes on coupling up

Note on tractor/trailer synchronisation (vehicles without EBS)

Note

Increased brake pad wear without tractor/trailer synchronisation

When a trailer or semitrailer is coupled up for the first time, tractor/trailer synchronisation should be carried out. Otherwise, increased brake pad wear may occur.

- Have tractor/trailer synchronisation carried out at a qualified specialist workshop.

Use of trailers/semitrailers without EBS

Note

Afterhitching up atrailer/semitrailer without EBS, switch off the vehicle and restart it. Otherwise, the trailer monitoring function of Sideguard Assist/Active Sideguard Assist may be impaired or may not function (→ Page 311).

Notes on the fifth-wheel coupling

Danger

Risk of accident due to too much play between the fifth-wheel kingpin and the coupling plate

The semitrailer may break away from the coupling plate.

You could lose the semitrailer as a result.

- Follow the instructions of the fifth-wheel coupling manufacturer.

Danger

Risk of accident due to damaged or unlocked fifth-wheel coupling

You could lose the semitrailer.

- ► Always ensure that the fifth-wheel coupling is undamaged and has been locked after coupling up.

Ensure this even if the following conditions have been met:

- the vehicle is equipped with a monitored fifth-wheel coupling.
- The green indicator lamp in the status area of the instrument cluster lights up.

Note

Damage to the fifth-wheel kingpin or the monitored fifth-wheel coupling

The display message Check semitrailer coupling: open if needed. is shown in the instrument cluster during coupling.

- ► Check the locking mechanism on the monitored fifth-wheel coupling.

Note

Damage to the fifth-wheel kingpin sensor

Observe the wear limits in the manufacturer's operating instructions for the wear ring, locking hook, and fifth-wheel kingpin. The wear should not drop below the wear limits. Otherwise, the fifth-wheel kingpin sensor may be damaged.

- ► If a red display message is shown multiple times in the instrument cluster with a coupled semitrailer and the vehicle switched on: Check the wear limits on the semitrailer and on the monitored fifth-wheel coupling.

The monitored fifth-wheel coupling has sensors that perform the following functions during the coupling/uncoupling process or once the vehicle has been switched on:

- monitoring of the semitrailer, the fifth-wheel kingpin, and the clasp
- showing the status of the locking mechanism of the monitored fifth-wheel coupling on the instrument cluster

If malfunctions or errors occur during coupling/uncoupling, the instrument cluster will show a red display message (→ Page 548).

Indicator lamps in the instrument cluster and their meaning

Lamp	Meaning
	The semitrailer is not coupled up. The monitored fifth-wheel coupling is not engaged.
	The semitrailer is not correctly coupled up. The monitored fifth-wheel coupling is engaged; however, no semitrailer can be detected.
	The semitrailer is correctly coupled up. Check that the monitored fifth-wheel coupling is in good condition and engaged correctly.
	The sensor on the fifth-wheel coupling is faulty. Observe the further notes in the display messages.

Coupling up the tractor/semitrailer combination

Before attaching

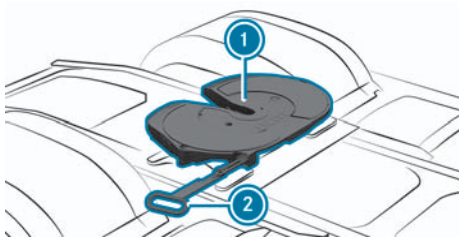

For vehicles with a monitored fifth-wheel coupling, the instructions on the fifth-wheel coupling and uncoupling procedures in the manufacturer's Operating Instructions must be observed.

- ► Use chocks to secure the semitrailer against rolling away.
- ► Open the fifth-wheel coupling ① with the lever ②; see the manufacturer's operating instructions.
- ► Semitrailer tractor with air suspension: Raise or lower the chassis frame (→ Page 332) so that the semitrailer plate is 50 mm lower than the fifth-wheel coupling ①.
- ► Vehicles with steel suspension: Use the landing gear to adjust the semitrailer height such that the semitrailer plate is 50 mm lower than the fifth-wheel coupling ①.

Removing the mudguard centre parts

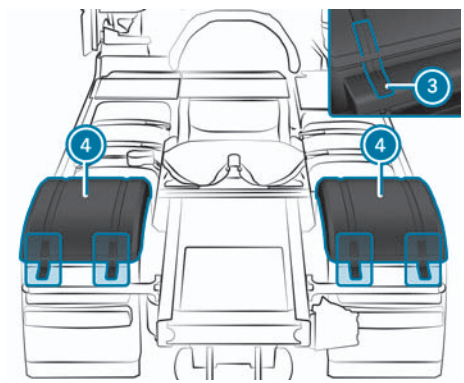

Only remove the mudguard centre parts ④ in the following cases:

- If the semitrailer makes the use of the mudguard centre parts ④ impossible.
- If the semitrailer's body covers the wheels.
  When using the mudguard centre parts ④, observe the legal requirements for the country you are currently in.

- ► Release the rubber retainers ③ of the mudguard centre parts ④ on the left and right-hand sides of the vehicle.
- ► Remove the mudguard centre parts ④.

Coupling for vehicles with a monitored fifth-wheel coupling:

- ► Drive slowly under the semitrailer plate.
- ► Raise the vehicle level or lower the semitrailer until the instrument cluster shows the display message Coupling level reached.
- ► Reverse slowly until the fifth-wheel coupling ① locks.
  - ◁ The indicator lamp on the instrument cluster lights up.

- If the instrument cluster shows display message Driving level below coupling level while reversing: Correct the semitrailer level again until the instrument cluster shows the Coupling level reached display message.

Coupling up vehicles without a monitored fifth-wheel coupling

- Reverse slowly until the fifth-wheel coupling (1) locks.

After coupling up

- Stop the vehicle and apply the parking brake.
- Secure fifth-wheel coupling (1) against unauthorised operation and check the locking mechanism (see the manufacturer's Operating Instructions).
- Retract the landing gear fully; see the manufacturer's operating instructions.
- Connect the cables and compressed-air lines (→ Page 377).

Coupling a trailer

Prior to coupling up

Danger

Risk of accident due to longitudinal play of the trailer coupling

If there is too much longitudinal play at the trailer coupling, you may lose the trailer.

- Check whether there is longitudinal play at the trailer coupling on a daily basis.
- To do this, forcefully move the connecting rod body of the trailer coupling forwards and backwards.
- Have any longitudinal play rectified as soon as possible at a qualified specialist workshop.

The longitudinal play of the trailer coupling cannot be checked on the coupling jaw.

Note

The version of the trailer hitch operating lever depends on the equipment.

Please comply with the manufacturer's operating instructions when operating the trailer hitch.

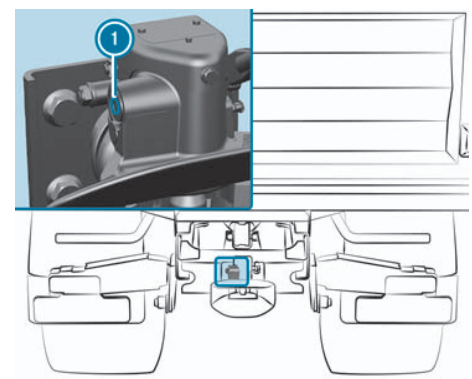

- Apply the parking brake and release the service brake on the trailer; see the manufacturer's operating instructions.
- Use chocks to secure the trailer's rear wheels against rolling away. The

unbraked front axle of the trailer must still be able to turn.

- Set the drawbar to the height of the trailer coupling; see the manufacturer's operating instructions.
- **Coupling up:** Back up slowly until the trailer coupling locks.

After coupling up

- Ensure that check pin ① of the trailer coupling is completely retracted. See the manufacturer's operating instructions.
- Connect the cables and compressed-air lines (→ Page 377).

Detaching semitrailers and uncoupling trailers

Note

Damage to the chassis on vehicles with air suspension

Vehicles with air suspension may spring out suddenly after unhitching the semitrailer.

This can lead to damage to the vehicle chassis and semitrailer.

- Before uncoupling, lower vehicles with air suspension until there is a gap between the semitrailer plate and the fifth-wheel coupling.

- Park the vehicle on a firm and level surface.
- Apply the parking brake.
- Use chocks to secure the trailer or semitrailer against rolling away.
- Extend the landing gear on the semitrailer; see the manufacturer's operating instructions.
- Set the trailer's tow bar support to the height of the trailer coupling; see the manufacturer's operating instructions.
- Remove the cables and compressed-air lines (→ Page 379).
- Open the trailer or fifth-wheel coupling; see the manufacturer's operating instructions.
- Vehicles with a trailer: Drive forwards slowly.
- Vehicles with semitrailer: Drive forward a little until the fifth-wheel kingpin is free.
- Semitrailer tractor with air suspension: Lower chassis (→ Page 332) until there is a gap between the semitrailer plate and the fifth-wheel coupling.
- Drive forwards fully.
- Fit the mudguard centre parts.

Cables and compressed-air lines

Notes on cables and compressed-air lines

Danger

Risk of falling when connecting/disconnecting the compressed-air lines without climbing aids

If you climb onto or down from the vehicle in order to connect/disconnect the cables and compressed-air lines, you could:

- slip and/or fall.

- You can damage component parts, e.g. the battery cover, and fall as a result.
- You may burn yourself on hot components.

► Always use nonslip and stable climbing aids, e.g. a suitable ladder.

Danger

Risk of burning due to the cover of the silencer being hot

The cover of the silencer can get very hot when driving.

► Never step on the cover of the silencer.

Be careful not to overload when operating additional consumers on your trailer or semitrailer. If you fit several reversing lamps on the trailer/semitrailer, for example, the reversing lamps may fail as a result of overloading.

Connecting cables and compressed-air lines

Note

Damage to cables and compressed-air lines due to insufficient clearance

If cables and compressed-air lines do not have sufficient play when cornering, damage may occur. The cables and compressed-air lines may be under tension, may kink, or may rub against other components.

► Keep the cables and compressed-air lines such that they yield slightly in response to all movements without tensioning, kinking, or rubbing e.g. when cornering.

Note

Double coupling head with hexagon (without lever): To open the double coupling head, press the hexagon downwards with a size 16 ring or open-ended spanner and hold it there. After connecting or disconnecting the compressed-air lines, swivel the ring spanner upwards.

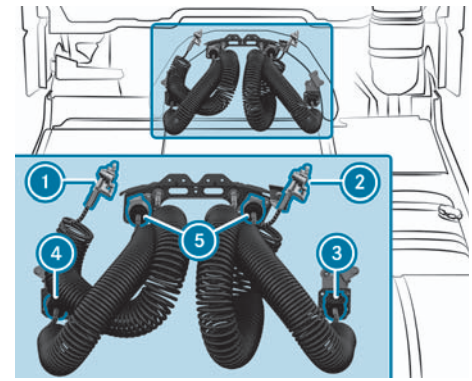

Semitrailer tractor (example)

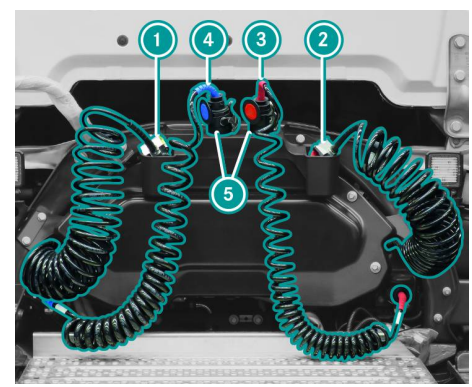

Semitrailer truck with ProCabin (example)

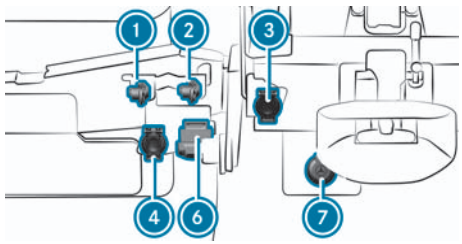

Platform truck (example)

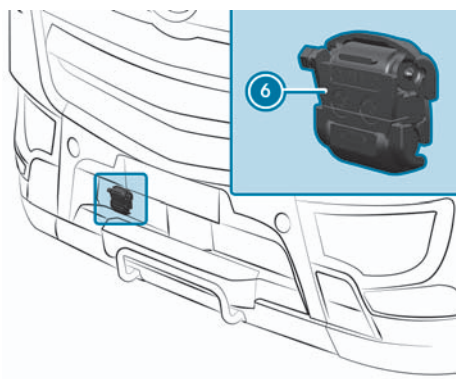

- With dual coupling head: Push down and hold the lever on the dual coupling head ⑥.
- With dual coupling head: Connect the compressed-air lines.
- With dual coupling head: Swivel the lever on the dual coupling head ⑥ upwards and release.
- Without dual coupling head: Connect the brake line coupling head (yellow) ①.
- Without dual coupling head: Connect the supply line coupling head (red) ②.

Note
The shut-off valves in the coupling heads open automatically when the connection is made.

- Trailers with adjustable brake force regulator: Adjust the brake-pressure regulator on the trailer after connecting the compressed-air lines (see the trailer operating instructions).
- Semitrailer truck: Connect the 24 V (15 pin) power supply plug ④ to the trailer.
- Platform vehicle: Connect the trailer power supply to the 24 V (15 pin) socket ④.

Note
On trailers with a 12 V power supply: Use the 12 V (13 pin) trailer socket ⑦.

Note
Turn signal indicator monitoring is also active when using LED tail lamps. A system failure is indicated by the lamps flashing at double the frequency or by a display message in the driver information system.

- Semitrailer truck: Connect the ABS/BS (5/7-pin) connecting cable plug ③ to the trailer.
- Platform vehicle: Connect the connecting cables of the trailer to the ABS/BS (5/7 pin) socket ③.
- Semitrailer truck: If the semitrailer truck is used with a semitrailer without ABS, insert the plug of the connecting cable into the blank socket ⑤.
- Check the lighting systems, turn signal lamps, and brake lights on the

vehicle and on the trailer/semitrailer for correct function and cleanliness.

- Check the operation of the indicator lamps for the towing vehicle and trailer/semitrailer turn signal lamps in the instrument cluster.
- After pulling away, check that the brake system on the trailer/semitrailer is functioning correctly, paying attention to the road and traffic conditions.

Disconnecting cables and compressed-air lines

Danger

Danger of accident due to incorrect removal of the coupling heads

If you remove the coupling heads in the wrong order, the trailer/semitrailer brake will be released and the trailer/semitrailer may roll away.

- Observe the correct sequence when removing the coupling heads.

Note

Malfunction due to dirty coupling heads

If the covers of the coupling heads are not closed after the compressed-air lines are disconnected, the coupling heads may become dirty. This may cause the compressed-air system to malfunction.

- After the compressed-air lines are disconnected, ensure that the covers are closed.

Note

Damage to the electrical system

If the cables are not inserted into the empty sockets after they are disconnected, water may enter the wiring harness. This may damage the electrical system.

- After the cables have been disconnected, insert the plugs into the empty sockets.

Note

Double coupling head with hexagon (without lever): To open the double coupling head, press the hexagon downwards with a size 16 ring or open-ended spanner and hold it there. After connecting or disconnecting the compressed-air lines, swivel the ring spanner upwards.

- Apply the parking brake of the towing vehicle.
- Apply the trailer/semitrailer parking brake. Observe the manufacturer's operating instructions.
- With dual coupling head: Push down and hold the lever on the dual coupling head 6.
- With dual coupling head: Remove the compressed-air lines.
- With dual coupling head: Swivel the lever on the dual coupling head 6 upwards and release.
- Without dual coupling head: Disconnect the reservoir line coupling head (red) 2.

◁ The brakes of the trailer/semitrailer are applied automatically.

- Without dual coupling head: Disconnect the brake line coupling head (yellow) ①.
- Semitrailer truck: Disconnect the 24 V (15-pin) plug ④ from the trailer.
- Platform vehicle: Disconnect the power supply of the towing vehicle trailer at the 24°V (15 °pin) socket ④.

Note

On trailers with a 12°V power supply: Disconnect the power supply of the towing vehicle trailer from the 12°V (13°pin) socket ⑦.

- Semitrailer truck: Disconnect the ABS/BS (5/7-pin) plug ③ from the trailer.
- Platform vehicle: Disconnect the connecting cable of the towing vehicle trailer from the ABS/BS (5/7 pin) socket ③.
- Semitrailer truck: If the semitrailer tractor is driven without a ⑤ semitrailer, plug the connecting cable into the empty sockets.
- Check the operation and cleanliness of the lighting system as well as that of the turn signals and brake lights.

Semitrailer truck hydraulic system

Notes and control elements of the semitrailer truck hydraulic system

Danger

Risk of burns from hot hydraulic fluid

The hydraulic system is highly pressurised and the hydraulic fluid may be hot.

Hydraulic fluid may spray out under high pressure.

- Always have work on the hydraulic system carried out at a qualified specialist workshop.

Danger

Risk of accident with the tipper body raised while driving

If you pull away with the tipper body raised, the vehicle could become caught on buildings, bridges or trees.

- Before you pull away, always make sure that the tipper body is lowered and secured correctly.

Note

Damage to the hydraulic system of the tractor/semitrailer combination

Hydraulic fluids of different grades are rarely compatible even if their common base oil does mean that they are miscible. Blending always has an effect on the properties, characteristics and reactions of the hydraulic fluid.

Blending different fluids could result in damage to the hydraulic system of the tractor/semitrailer combination.

- The fluid in the trailer's hydraulic system must match the fluid in the

tractor/semitrailer combination's hydraulic system.

Note

Damage to the semitrailer tractor hydraulic system and/or the trailer hydraulic system

Notes on operating the tractor/semitrailer combination hydraulic system:

- The operating pressure of the hydraulic system of the tractor/semitrailer combination must not exceed the maximum permitted operating pressure of the trailer hydraulic system.
- The hydraulic lines of the tipper semitrailer must be connected.
- Tthe low-speed splitter box must be selected.

Otherwise, the hydraulic system of the tractor/semitrailer combination and/or trailer could be damaged.

► Observe the notes on operating the tractor/semitrailer combination hydraulic system.

When using the tractor/semitrailer combination's hydraulic system, only operate tipper semitrailers with a one or two line system. Their hydraulic system is operated with a master valve in the cab. The operating pressure of the tractor/semitrailer combination's hydraulic system can be switched between 170 bar (low pressure) and 250 bar (high pressure).

The hydraulic line connections have screw couplings of either 1 inch or DN 20.

The tractor/semitrailer combination's hydraulic system is filled at the factory with a hydraulic fluid of category H-LP (HLP-D 22) (→ Page 386).

Before operating a tipper semitrailer, observe the following information:

- The operating pressure of the hydraulic system of the tractor/semitrailer combination does not exceed the maximum permitted operating pressure of the trailer hydraulic system.
- The hydraulic connections of both hydraulic systems are compatible.
- The trailer hydraulic system's hydraulic fluid matches that of the hydraulic system of the tractor/semitrailer combination.

Controls

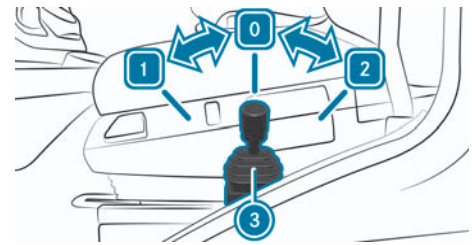

Tipper body operating lever

1	Lower tipper body
0	STOP – stop the tipping or lowering movement
2	Raise tipper body
3	Operating lever with pull ring

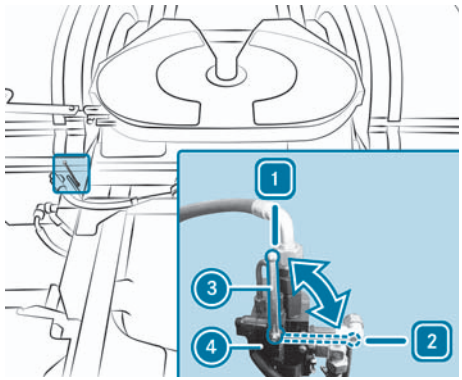

Tipper valve operating lever

1 Operating position, low pressure (LP) 170 bar

2 Operating position, high pressure (HP) 250 bar

3 Operating lever

4 Tipper valve

Connecting/disconnecting hydraulic lines

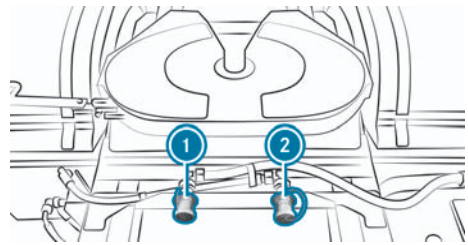

Keep the hydraulic lines such that they can manage all movements when cornering etc. without tensioning, buckling or rubbing. Before connecting the hydraulic lines, make sure that their threaded couplings are compatible with the sockets on the towing vehicle. Do not use any tools when connecting the hydraulic lines and do not climb on any part of the vehicle.

Before coupling and decoupling the hydraulic lines, the tractor/semitrailer combination's hydraulic system must be depressurised and the trailer's tipper body should be fully lowered. The tractor/semitrailer combination's hydraulic system is only depressurised if the operating lever in the cab is in the centre position (STOP) and the power take-off is disengaged. A few drops of hydraulic fluid may escape when separating the hydraulic connections. Observe the national work safety and accident prevention regulations as well as the environmental protection regulations.

If the tipper semitrailer is fitted with a two-line system, connect the pressure line to connection 2 and the return line to connection 1. If the return line is not coupled or coupled incorrectly, it can result in damage to the tipper semitrailer's hydraulic system.

If the tipper semitrailer is fitted with a one-line system, connect the hydraulic line to connection 2 on your vehicle. Connection 1 for the return line remains free in this case.

Connecting

- Make sure that the trailer's hydraulic operating pressure matches that of the tractor/semitrailer combination. Select the high or low pressure set-

ting on the changeover unit for the operating pressure (→ Page 376).

- Ensure that the operating lever in the cab is in the centre position (STOP) (→ Page 376).
- Ensure that power take-off for the hydraulic pump is disengaged (→ Page 404).
- Loosen dust caps from the connections on the vehicle and from the hydraulic lines.
- Connect the hydraulic lines to the sockets and tighten them hand-tight.
- Run a function check after connecting the hydraulic lines.

Disconnecting

- Ensure that the operating lever in the cab is in the centre position (STOP) (→ Page 376).
- Ensure that power take-off for the hydraulic pump is disengaged (→ Page 404).
- Place a cloth or a suitable receptacle under each connection to take up the drops of hydraulic fluid.
- Loosen and disconnect the hydraulic lines on the connections.
- Fasten the dust caps on the connections on the vehicle and the hydraulic lines.
- Correctly dispose of collected hydraulic fluid.

Operating the hydraulic system

Tipping

- Engage the power take-off for the hydraulic pump (→ Page 404).
  - ◁ The chassis is lowered automatically. This increases tipping stability. The display shows the symbol for chassis below driving level.
- Ensure that the low-speed splitter group is selected.
- Pull up and hold the pull ring on the control lever in the cab (→ Page 380).
- Gently pull the control lever back. To stop the tipping movement, move the control lever into the centre position (STOP). The further back you pull the control lever, the faster the tipping speed of the tipper body.
  - ◁ The indicator lamp lights up on the display if the tipper body is raised.

or

- Pull the pull ring upwards and the control lever in the cab back to the end position.
  - ◁ The control lever engages. The tipper body will stop tipping automatically after the control lever reaches the end position. The indicator lamp lights up on the display if the tipper body is raised.
- To stop the tipping movement, pull the pull ring upwards and move the control lever in the cab to the centre position (STOP).

Lower tipper body

- When the control lever in the cab is engaged in the end position, pull the pull ring upwards and move the con-

trol lever in the cab into the centre position (STOP).

- ▶ Gently push the control lever forwards. To stop the lowering movement, move the control lever into the centre position (STOP).
  - ◁ The further forward you push the control lever, the faster the speed of the tipper body lowering movement. When the tipper body is fully lowered, the [ ] indicator lamp goes out on the display.
- ▶ Move the control lever in the cab into the centre position (STOP).
- ▶ Deactivate the power take-off (→ Page 404).
- ▶ Raise the chassis to driving level (→ Page 332).

Maintaining and caring for the hydraulic system

Cleaning

Observe the following notes:

- Cleaning the exterior (→ Page 415)
- High-pressure cleaning (→ Page 414)

When cleaning the vehicle exterior, ensure that you never aim the water jet directly at the breather filter cap of the hydraulic fluid reservoir.

Visual inspection

Note

Service life of hydraulic hoses

Hydraulic hoses are marked with an expiration date (six years after date of manufacture).

- ▶ Make sure that hydraulic hoses are replaced by a qualified specialist workshop at the end of this operating time at the latest, even if there is no visible external damage.

Check the components of the tractor/semitrailer combination's hydraulic system, and in particular the hydraulic lines, on a weekly basis for leaks, external damage and operating lifespan. Have defective and leaking components repaired immediately at a qualified specialist workshop.

Checking the hydraulic fluid level and topping up hydraulic fluid

Note

Environmental damage caused by spilled oil during refilling

Spilled oil that enters the ground causes damage to the environment.

- ▶ When refilling, make sure that no oil is spilled.

Note

Damage to the hydraulic system

If you top up too much hydraulic fluid, the expansion chamber in the hydraulic fluid reservoir is decreased. This can damage the hydraulic system.

- ▶ Never top up too much hydraulic fluid.
- ▶ Have excess hydraulic fluid siphoned off.
- ▶ Only use hydraulic fluids that have been tested and approved for the

tractor/semitrailer combination's hydraulic system in accordance with the Mercedes-Benz Trucks Specifications for Operating Fluids. Using other hydraulic fluids or mixing other hydraulic fluids can damage the hydraulic system of the tractor/semitrailer combination.

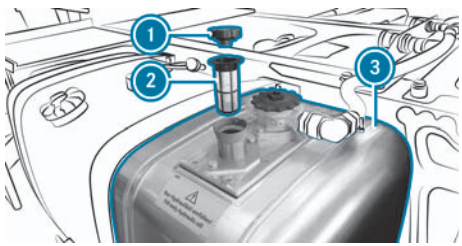

The hydraulic fluid reservoir ③ is either a single tank on the right-hand side of the vehicle or combined with the fuel tank on the left-hand side of the vehicle as a combination tank.

Check the hydraulic fluid level every day and only when the vehicle is horizontal and stationary.

- ► Ensure that the operating lever in the cab is in the centre position (STOP).
- ► Ensure that power take-off for the hydraulic pump is disengaged (→ Page 404).
  - ◁ Only then is the hydraulic system of the tractor/semitrailer combination depressurised.
- ► Remove cap with integrated breather filter ①.
- ► Unscrew and remove filter screen ②.
- ► Measure the gap between the hydraulic fluid surface level and the upper edge of the filler neck and determine the quantity of fluid used.

Combination tank with fuel tank on the left-hand side of the vehicle

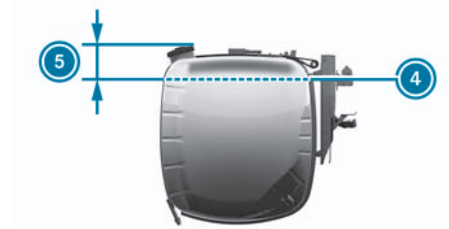

Hydraulic combination tank

④ Max. fill level
140 l for 128 l effective fluid quantity (usable volume)

⑤ Distance
Approx. 2.3 l effective fluid loss for every 10 mm the surface level lowers

Single tank on the right-hand side of the vehicle

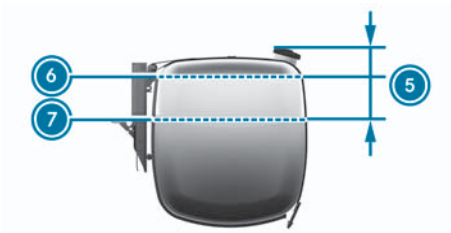

Hydraulic single tank

6 Max. fill level
226 l for 198 l effective fluid quantity (usable volume)

5 Distance
101 mm

7 Fill level
156 l for 128 l effective fluid quantity (usable volume)

5 Distance
258 mm

Approximately 4.5 l effective fluid loss for every 10-mm the surface level lowers

- If necessary, top up with an authorised hydraulic fluid through filter screen 2. Before topping up, screw the filter screen into the filler neck and then check the hydraulic fluid level again.
- Screw filter screen 2 into the filler neck.
- Place cap with integrated breather filter 1 on the filler neck and fasten tightly.

Replacing the hydraulic fluid reservoir cap

Replace the hydraulic fluid reservoir cap every year. In more dusty conditions you must change the cap with integrated breather filter even more regularly.

Parking up the vehicle

In addition to the special measures of the Mercedes-Benz Trucks Specifications for Operating Fluids, a change of hydraulic fluid must be carried out. After a non-operational time of more than 24 months, a change of hydraulic fluid must be carried out before restarting operation.

Operating data of the hydraulic system

Hydraulic fluid quality

The tractor/semitrailer combination's hydraulic system is filled at the factory with all-season hydraulic fluid of category H-LP (HLP-D 22).

Only use approved hydraulic oil in accordance with the Mercedes-Benz Trucks Specifications for Operating Fluids (→ Page 527).

Hydraulic fluid reservoir

Combination tank with fuel tank on the left-hand side of the vehicle

Tank	Volume
Maximum tank content	140 ℓ
Maximum effective fluid quantity (usable volume)	128 ℓ
Non-usable dead volume	12 ℓ

Single tank on the right-hand side of the vehicle

Tank	Volume
Maximum tank content	226 ℓ
Maximum effective fluid quantity (usable volume)	198 ℓ
Tank content for 128 l effective fluid quantity (usable volume)	156 ℓ
Non-usable dead volume	28 ℓ

Note

The hydraulic fluid reservoir single tank is filled with 156 l of hydraulic fluid at the factory.

Operating pressure and fluid output

Operating mode	Pressure/delivery rate
High pressure operation	250 bar
Low pressure operation	170 bar
Average fluid output At an engine speed of 1000 rpm and sufficient quantity of effective fluid	120 ℓ/min
Max. permitted engine speed	1100 rpm

Operating mode	Pressure/delivery rate
Maximum speed with low-range splitter box. Selecting the high-range splitter box is not permitted and can damage the hydraulic system.	

Hydraulic connections

The hydraulic line connections have screw couplings of either 1 inch or DN 20.

Activating ramp approach aid

Danger

Risk of accident from persons or objects in the manoeuvring area of the ramp approach aid

The ramp approach aid cannot detect people or moving obstacles.

There is therefore still a risk of accident despite the ramp approach aid being activated.

- Make sure that no persons or objects are within manoeuvring range when manoeuvring.

- **To activate:** Reversing.
  - If the trailer or semitrailer is equipped with ramp approach aid, the instrument cluster automatically displays the function when reversing.
  - Depending on the ramp approach aid, the distance from the trailer or semitrailer to the detected obstacle is also displayed, e.g. 2.30 m.
  - If the distance to the detected obstacle is less than approximately 1.80 m, the trailer/semitrailer symbol lights up red in the instrument cluster.
  - If the distance to the detected obstacle is less than approximately 0.70 m, a warning tone sounds.

Wind deflector

Adjusting the wind deflector

Danger

Risk of injury due to unsafe surface when adjusting the wind deflector

There are no working surfaces fitted on the vehicle for adjusting the wind deflector.

- ► Use firm, non-slip working surfaces, such as a ladder.
- ► Do not stand on the roof.

Danger

Risk of becoming trapped when adjusting the wind deflector

You could become trapped when you are adjusting the wind deflector.

- ► Therefore, make sure that there is adequate clearance when you adjust the wind deflector.
- ► Do not place parts of your body between the wind deflector and the cab.
- ► Have a second person help you.

Daimler Truck°AG recommends that you have the wind deflector adjusted at a qualified specialist workshop.

When adjusting the wind deflector, make sure that you:

- Do not exceed the permissible vehicle height (for international transport 4 m).
- Observe the maximum headroom clearance of underpasses.
- Observe the legal requirements for the country in which you are currently driving.

Note

When measuring the clearances, park the vehicle on a level surface. If in doubt, always select a higher setting of the wind deflector.

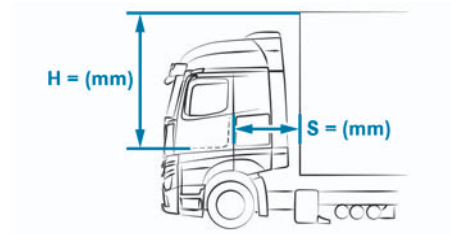

Exemplary representation

- ► Measure the distance **S** between the rear door jamb and the body.
- ► Measure the height difference **H** between the door entry and the body.

Adjust the wind deflector for S, M and L cabs

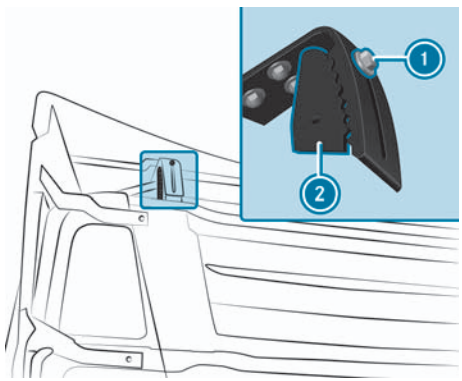

L cab (example)

- Determine which diagram corresponds to your vehicle (→ Page 389).
- Use the height difference **H** in the diagram to determine adjustment detent **A**.
- Unscrew screws (1) on the adjustment rails on both sides of the vehicle.
- Using the measured adjustment detent **A**, adjust the adjustment rails on holder (2).
- Screw in screws (1).

Adjust the wind deflector for ProCabin

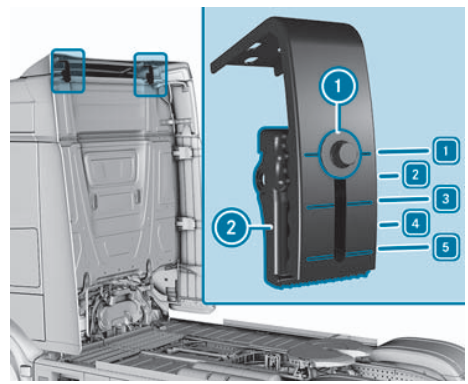

Actros L with ProCabin (example)

- Determine the correct adjustment notch [1] - [5] using the height difference **H** and the distance **S** given in table (→ Page 394).
- Unscrew screws (1) on the adjustment rails on both sides of the vehicle.
- Use the determined adjustment notch to adjust the adjustment rails on holder (2).
- Screw in screws (1).

Wind deflector diagrams

S cab ClassicSpace 420 platform vehicle

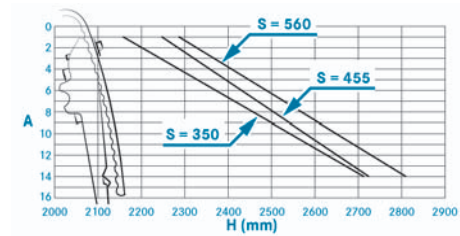

M cab ClassicSpace 420 platform vehicle

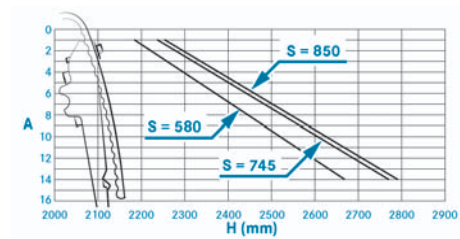

Wind deflector

L cab ClassicSpace 420 platform vehicle

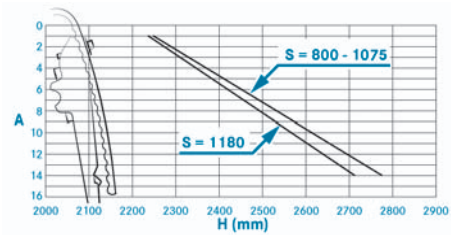

M cab ClassicSpace 600 platform vehicle

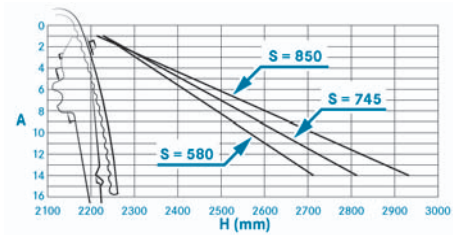

L cab StreamSpace 420 platform vehicle

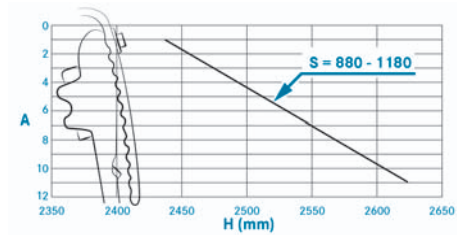

S cab ClassicSpace 600 platform vehicle

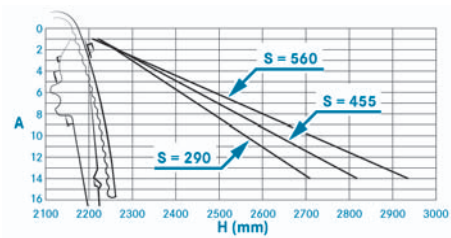

L cab ClassicSpace 600 platform vehicle

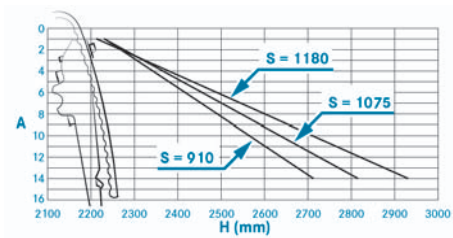

L cab StreamSpace 600 platform vehicle

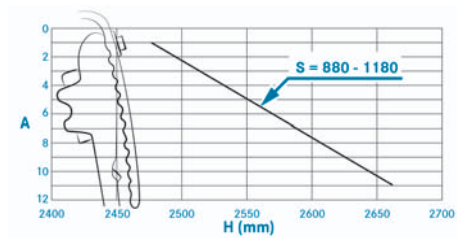

L cab Stream + BigSpace 765 platform vehicle

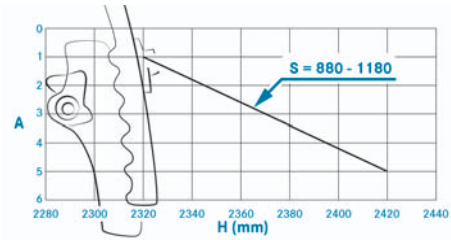

S cab ClassicSpace 420 semitrailer truck

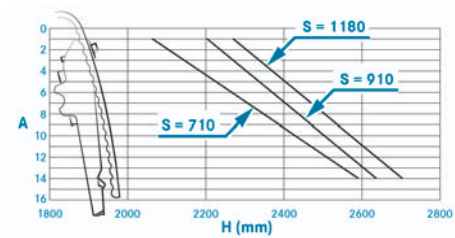

L cab ClassicSpace 420 semitrailer truck

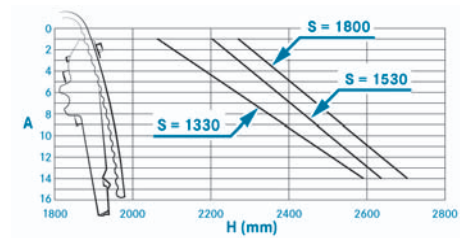

L cab Stream, Big + GigaSpace 765 LowDeck semitrailer tractor

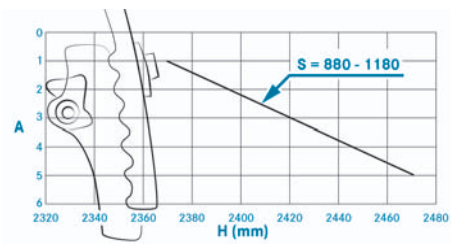

M cab ClassicSpace 420 semitrailer truck

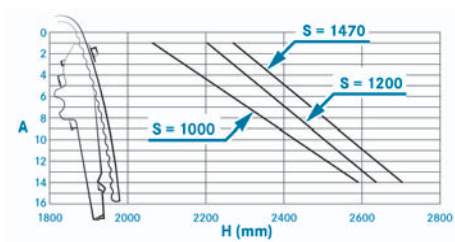

S cab ClassicSpace 600 semitrailer truck

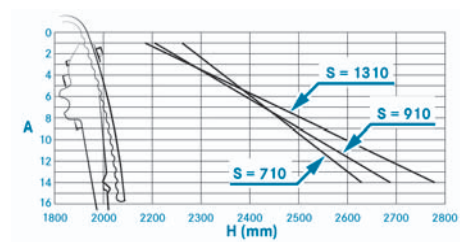

Wind deflector

M cab ClassicSpace 600 semitrailer truck

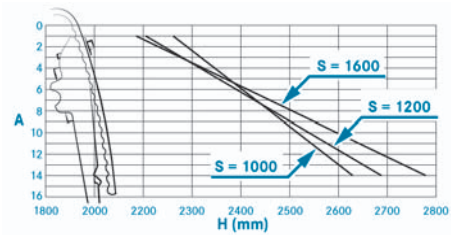

L cab StreamSpace 420 semitrailer truck

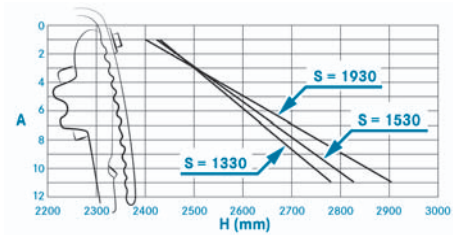

L cab StreamSpace 600 semitrailer truck, width 2.5 m

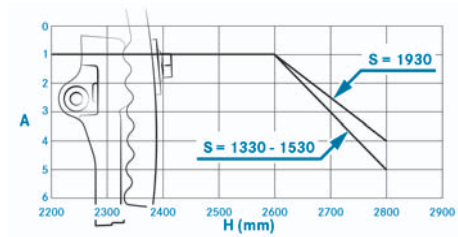

L cab ClassicSpace 600 semitrailer truck

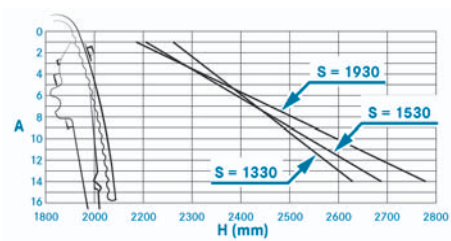

L cab StreamSpace 600 semitrailer truck, width 2.3 m

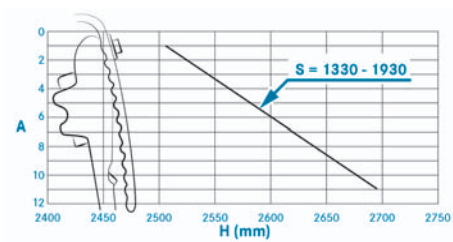

L cab BigSpace 600, semitrailer truck, width 2.5 m

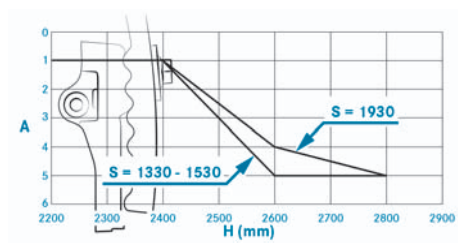

L cab Stream + BigSpace 765 semitrailer tractor

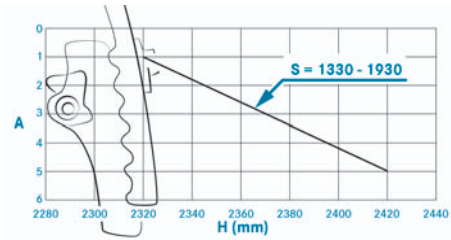

L cab Stream, Big + GigaSpace 765 LowLiner semitrailer tractor

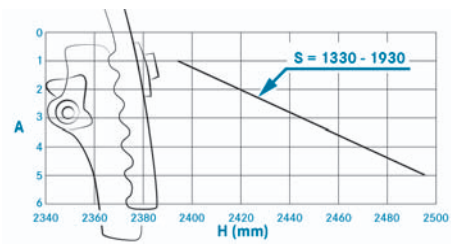

Adjustment values for ProCabin wind deflector

ProCabin semitrailer truck

ProCabin		S=1360	S=1560	S=1960
Stream	H=2160	1	1	1
	H=2260	2	2	2
	H=2360	3	3	2
	H=2460	4	4	4
	H=2560	5	5	5
Big	H=2160	1	1	1
	H=2260	3	3	2
	H=2360	4	4	2
	H=2460	5	5	4
	H=2560	5	5	5
Giga	Cannot be adjusted			

ProCabin platform vehicle

ProCabin		S=942	S=1142	S=1542
Stream	H=2113	1	1	1
	H=2213	1	1	1
	H=2313	1	1	1
	H=2413	2	2	1
	H=2513	3	2	1
Big	H=2113	1	1	1
	H=2213	1	1	1
	H=2313	1	1	1
	H=2413	2	2	1
	H=2513	3	2	1
Giga	Cannot be adjusted			

Winter operation

Winter driving

Preparing for a journey (winter operation)

Note

Engine damage due to incorrect SAE classification (viscosity) of the engine oil

If the SAE classification (viscosity) of the engine oil used is not suitable for persistently low temperatures of below -20°C, this may damage the engine. The temperature readings of the SAE classification are always based on fresh oil. Engine oil ages while driving due to soot and fuel residue. This impairs the characteristics of the engine oil, particularly at low outside temperatures.

- At outside temperatures of below -20°C, use engine oils of SAE classification 5W-30 or 0W-30.
- Use oils suitable for use throughout the year.

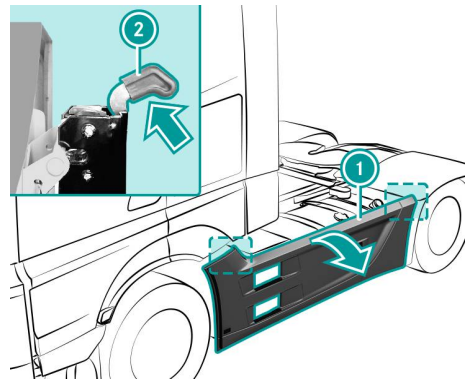

Actros L semitrailer tractor (example)

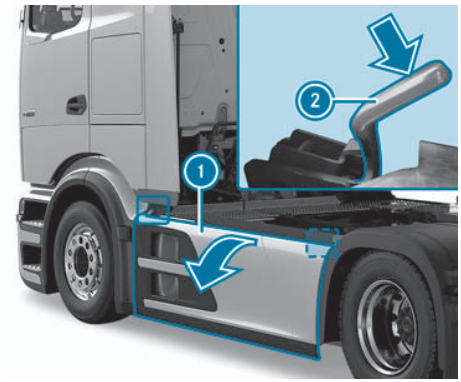

Actros L semitrailer tractor with ProCabin (example)

Remove snow and accumulations of ice on both sides of the vehicle between the side trim and the chassis.

- To release, push or pull the levers (2) on the front and rear of the locks in the direction of the arrow.
- Swing side trim (1) outwards.
- If necessary, detach the snap hooks of the check straps.

Note
Keep the locks free of dirt and replace the lubricant on the locks from time to time.

- ► Remove snow and ice from between side trim ① and the chassis.
- ► If necessary, attach the snap hooks of the check straps.
- ► Swing side trim ① back and push the pins on the brackets of side trim ① into the locks as far as they will go.
  - ◁ The locks must engage audibly and levers ② must spring back to their original position.
- ► Pull on side trim ① near the locks to check that these are engaged correctly.

Before the start of the cold season make sure:

- The coolant contains sufficient antifreeze protection (→ Page 530).
- The fuel used is suitable for winter use (→ Page 531).
- If single grade engine oil is used, the oil is changed in good time (→ Page 527).
- The windscreen washer system contains sufficient antifreeze (→ Page 432).
- Suitable winter tyres are fitted.
- Snow chains are carried in the vehicle.

Note
In wintry conditions, the law may require that winter tyres be fitted on the wheels of the drive axle. Find out which winter tyres are suitable for the intended use. Observe the legal requirements for the country you are currently in.

Notes on driving in winter

Danger
Risk of explosion due to liquid or gaseous starting substances
Liquid or gaseous starting aids immediately react with fuel vapour and are highly flammable.

- ► Do not use liquid or gaseous starting aids to start the vehicle.

Note
Damage to the differential gear due to spinning drive wheels
For vehicles without ASR (acceleration skid control system), changing from a slippery to a high-grip road surface with the drive wheels spinning at the same time may cause damage to the differential gear.

- ► Avoid spinning the drive wheels.

Please observe the following instructions on driving in winter:

- in snow, slush and on icy roads, fit snow chains to the drive wheels in good time.
- adapt your driving style to the wintry road conditions.
- If traction problems occur when driving with snow chains, disengage ASR (→ Page 266) or Stability Control Assist (→ Page 267).

Snow chains

Notes on snow chains

Danger

Risk of accident due to tearing snow chains

If you drive too quickly with snow chains, they may tear and injure other persons and damage the vehicle.

- Comply with the maximum permissible speed for operating the vehicle with snow chains.

Note

Damage to the vehicle from snow chains

To avoid vehicle damage:

- Only use snow chains that are approved and recommended for Mercedes-Benz trucks. Contact a qualified specialist workshop if you have any questions.

Note

Damage to the differential gear from snow chains

To avoid damage, Daimler Truck AG recommends:

- Fitting snow chains on all drive wheels. For vehicles with a permanent all-wheel drive, if snow chains are not fitted on all drive wheels, the inter-axle lock must be activated.

The law may require that snow chains be removed again as soon as possible once the roadway is clear of snow. The vehicle's driving and braking characteristics will be adversely affected if you drive on roadways that are clear of snow with snow chains fitted to the vehicle.

The maximum permissible speed with snow chains fitted to the vehicle is 50 km/h.

When using the snow chains described here, observe the legal requirements for the country you are currently in.

Do not use twin chains on vehicles with roll control. Only fit snow chains on the exterior wheels.

Vehicles with electric power steering: If you change the mechanical axle stops when using snow chains, for example, have the electric power steering recalibrated by a qualified workshop.

Vehicles with ASR/Stability Control Assist: If, when driving, traction problems arise while snow chains are being used, disengage ASR (→ Page 266) or Stability Control Assist (→ Page 267).

Checking the wheel clearance

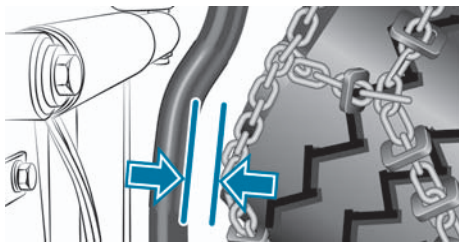

Note

Damage to the steering linkage from snow chains

If the distance between the snow chain and the steering linkage is less than 25 mm, the snow chain may damage the steering linkage.

- If this occurs, remove the snow chains again.
- Have the steering geometry checked at a qualified specialist workshop.

- Apply the parking brake.
- Fit the snow chains in accordance with the fitting instructions of the chain manufacturer.
- Start the vehicle.
- Turn the steering wheel towards the co-driver side to the stop.

Note

With the steering on full lock, there must be a distance of at least 25 mm between the snow chain and the drag link.

Parts for operation at low temperatures

Information regarding the cold-start limits

Without special equipment, your vehicle is capable of starting at temperatures of as low as -20°C. When fitted with special equipment and given cold-resistant operating fluids, your vehicle can be started at temperatures down to -32°C.

Note

At temperatures lower than the stated cold-start limits, engine starting may be impaired despite taking the appropriate measures.

Overview of special equipment of the cold climate package

The following special equipment improves the starting capability of your vehicle at low outside temperatures:

- Fuel preheating
- Coolant preheater
- Heated electronic air processing unit
- Auxiliary heating

Low-temperature operating fluids

Have the vehicle converted to low-temperature operating fluids at a qualified specialist workshop.

Note

The recommended maintenance intervals are shorter if the vehicle is mainly operated at low temperatures.

Before attempting a cold start

Note

Damage to the batteries due to rapid charging

At very low temperatures, the battery fluid of discharged batteries may freeze.

- Carry out rapid charging on cold batteries. Otherwise, the batteries may be damaged.

Special measures must be taken before a cold start if the vehicle has been exposed to extremely low temperatures.

- Charge discharged batteries before starting.

Note

The capacity of the batteries is adversely affected by increasingly cold temperatures.

- Thaw frozen batteries before charging them.

Starting the vehicle at low temperatures

Note

Damage to the batteries during a cold start

Attempting to start the engine when a battery is cold or not fully charged can result in damage to the batteries.

- If the battery voltage is too low when the vehicle is switched on or the symbol appears in a display message, do not start the vehicle.

Note

Damage to the engine due to the oil pressure being too low

If a warning tone sounds and the symbol appears in a red display message, the operational safety of the engine is at risk.

- Do not set the vehicle in motion, or park it up immediately, paying attention to the road and traffic conditions.

- Switch off all electrical consumers, e.g. the radio and the blower.
- For vehicles with auxiliary heating (auxiliary heating for the cab and the engine), at outside temperatures below -20 °C: Preheat the engine with the auxiliary heating before starting (→ Page 153).
- At outside temperatures below -30 °C and on vehicles with a coolant preheater: Preheat the engine with the coolant preheater for at least 90 minutes (→ Page 153).
- Switch on the vehicle.

- Pay attention to the outside temperature shown on the display (→ Page 163) and signs that the on-board electrical system voltage is low, e.g. a weak lighting system.
- Shift the transmission to neutral.
- Deactivate the power take-off (→ Page 404).
- Start the vehicle.

If the vehicle does not start:

Note

The starting procedure is automatically interrupted for vehicles with the following engine:

Engine OM 936: after approximately 60 seconds

Engine OM 470, OM 471 and OM 473: after approximately 40 seconds

- Switch off the vehicle.
- Repeat the starting procedure after approximately one minute.
- After three starting procedures, take a break of about three minutes.
- If the supply pressure in the brake system has dropped below 6 bar, fill up the compressed-air system (→ Page 488). This will ensure that the clutch is disengaged when you start the vehicle in vehicles with a manual transmission.

Driving in low temperatures

Observe the following at outside temperatures below -20 °C:

- Check the supply pressure in the brake system before you set off. Set off only when the supply pressure is sufficient.
- Before you pull away, check that the power steering is functioning correctly by turning the multifunction steering wheel repeatedly to full left and full right lock.
  The hydraulic operation of the steering may be impaired in outside temperatures below -25 °C.
- Change gear early and avoid high engine speeds.
- Avoid high loads at the start of your journey.
- Avoid short engine running times.
- Allow the vehicle to warm up for around 20 minutes, then increase the load.
- For technical reasons, the engine brake is only available from an oil temperature of 15 °C at level 1.
  The full engine braking effect is only available across the entire engine speed range from an oil temperature of 60°C.
- The battery can only be charged at a certain rate per hour, regardless of the power output of the alternator. The rate of charge is significantly reduced by low outside temperatures. As a result, it can take significantly longer to charge the battery in winter.

Parking in low temperatures

If you park the vehicle in outside temperatures below -30 °C, it may not be able to start even with the cold climate package. Daimler Truck AG recommends that you

do not park the vehicle outdoors in outside temperatures below -30°C.

If you do park the vehicle in the open air in very low temperatures, special measures are necessary:

- If required, back up the vehicle's lighting system using external lighting, e.g. a warning lamp.
- Check the fuel level on the fuel display (→ Page 162).
- If the fuel level is in the reserve area, top up the fuel tank (→ Page 362).

Note

If the vehicle is stationary for an extended period of time with a fuel level that is too low, you may have to depressurise the fuel system (→ Page 460).

Observe further instructions and information concerning the batteries.

Power take-off

Power take-off function

Danger

Risk of accident due to the vehicle roll-starting unintentionally

If you use the engine run-on function, the vehicle may roll-start unintentionally if crawler mode is activated and the start-off gear is engaged.

- ► Shift the transmission to neutral.
- ► Apply the parking brake.

Danger

Risk of accident on uphill or downhill slopes

The parking brake may not be sufficient to secure the vehicle on uphill and downhill slopes.

A loaded vehicle or a vehicle with a trailer/semitrailer may roll away.

- ► In the check position, check whether the braking force of the parking brake alone is sufficient to hold the complete vehicle.
- ► Generally, secure the towing vehicle and trailer/semitrailer with the parking brake and, additionally, with chocks.

Note

Vehicles with clutch pedal: Damage to the power take-off

Switching the power take-off on or off too soon after disengaging the clutch may damage the power take-off.

- ► Wait ten seconds after disengaging the clutch. Only then switch the power take-off on or off.

Observe the information on operating safety (→ Page 5).

When you engage a power take-off, the vehicle is completely lowered on all air-sprung axles. This increases the tipping stability of the vehicle.

The power take-off is used to drive auxiliary assemblies, such as hydraulic pumps. Depending on the conditions of use, you must operate the engine and power take-off at a certain engine speed (working speed).

Power take-offs with rpm limitation: when the power take-off is engaged, you cannot exceed the programmed working speed.

The engagement status of the power take-off is displayed on the instrument cluster:

- Power take-off disengaged
- Power take-off engaged

Vehicles with a power take-off on the engine: The power take-off on the engine cannot be selected. The auxiliary assembly is directly connected to the engine and is permanently driven. The working speed and body-dependent functions are controlled and selected by engaging the constant rpm control (→ Page 406).

Vehicles with transmission-driven power take-off: When the power take-off is engaged, you can select all pulling-away gears or reverse gear when stationary. Changes of direction are only permitted in the selected gear. You must not change

gears while driving. On vehicles with an automated manual transmission, the transmission automatically shifts to the manual drive program M (→ Page 251) when the power take-off is engaged.

Vehicles with an engine-driven take-off (NMV), without a clutch actuator (code N4Y or N4Z): Pulling away is not possible with the power take-off engaged. You cannot operate the power take-off while driving.

Vehicles with an engine-driven power take-off (NMV), with clutch actuator (code N4X or N4W): When the power take-off is engaged, you can select all pulling-away gears or reverse gear when stationary. You can select all gears while driving.

If you have to leave the cab to operate the power take-off, you can use the ignition lock's engine run-on function. The engine then continues to run and you can lock the doors of the cab with the key (→ Page 223).

Note

The engine speed is increased and the engine noise may change during regeneration.

Note

If you have to leave the cab to operate the power take-off, observe the notes on the diesel particulate filter (→ Page 355).

Activating/deactivating the power take-off

Activate power take-off

The power take-off must be load-free when it is activated/deactivated. Observe the body/equipment mounting directive.

Observe the activation/deactivation sequence when using the engine-driven power take-off (NMV).

Failing to observe the activation/deactivation sequence when using a transmission-driven or engine-driven power take-off (NMV) can lead to functional impairments.

This includes longer activation/deactivation times or a failure to engage/disengage power take-offs.

The required power of the power take-offs must not exceed the maximum engine output at the respective operating point.

- ► Stop the vehicle.
- ► Apply the parking brake.
- ► Shift the transmission to neutral.
- ► Leave the engine running at idle speed.
- ► Vehicles with manual transmission: Depress and hold down the clutch pedal.
- ► Press the [♫] button below the multimedia display.
  - ◁ The Switch menu is shown in the display.
- ► **To switch on (code N4Y/N4Z):** First switch on the transmission power take-off and then the NMV.
- ► **To switch on (code N4W/N4X):** First switch on the NMV and then the transmission power take-off.
- ► Press the button [⊢⊣].

◁ If the power take-off is engaged, the engagement status is displayed in the instrument cluster [⊢•]. The indicator lamp on the [⊢•] button comes on.

► Vehicles with manual transmission: Release the clutch pedal when the instrument cluster shows the power take-off is engaged.

When the parking brake is released, the display message [Ⓟ] and Engage parking brake. will appear in the instrument cluster. If [⊢○] flashes in the instrument cluster, the electronic management system does not recognise the vehicle's current operating state.

► Check whether all activation conditions are fulfilled.

► Activate the power take-off again.

► If [⊢○] flashes again in the instrument cluster, visit a qualified workshop.

Note

Automatic regeneration results in high engine speeds at the transmission-driven power take-off. If the power take-off application is not designed for increased engine speed, wait for automatic regeneration and reactivate the power take-off.

Deactivate power take-off

► Observe the power take-off activation/deactivation sequence as instructed.

► Leave the engine running at idle speed.

► Vehicles with manual transmission: Depress and hold down the clutch pedal.

► Press the [⌂] button below the multimedia display.

◁ The Switch menu is shown in the display.

► **To switch off (code N4Y/N4Z):** First switch off the transmission power take-off followed by the NMV.

► **To switch off (code N4W/N4X):** First switch off the transmission power take-off followed by the NMV.

► Press the button [⊢•].

◁ The power take-off is disengaged. The indicator lamp in the button [⊢•] goes out.

► Vehicles with manual transmission: Release the clutch pedal when the instrument cluster no longer shows the power take-off.

Preselecting working speed

Vehicles with automated manual transmission

You can preselect the working speed using the multifunction lever.

► Turn the direction of travel selector switch to position [N].

◁ The display shows N1 or N2 depending on the previously selected splitter box.

► **To preselect a high working speed:** Pull the multifunction lever up briefly.

◁ The fast splitter box is selected and the display shows N2.

► **To preselect a low working speed:** Push the multifunction lever down briefly.

◁ The slow splitter box is selected and the display shows N1.

Vehicles with manual transmission

You can preselect the working speed using the splitter switch.

► **To preselect a high working speed:** Pull the splitter switch up.

◁ The fast splitter box is selected.

► **To preselect a low working speed:** Push the splitter switch downwards.

◁ The slow splitter box is selected.

Setting the idle/working speed

After the vehicle is started, the idle speed is regulated automatically depending on the coolant temperature.

If auxiliary assemblies such as hydraulic pumps are operated, the engine must be running at a certain speed (working speed). The engine idling speed/working speed can be set via the on-board computer.

Speed setting range

Engine	Adjustable engine idle speed
OM 470 OM 471 OM 473	approx. 500–800 rpm
OM 936	approx. 600–800 rpm
OM 460	approx. 560–800 rpm

The rpm range can differ for special bodies.

► Engine the power take-off (→ Page 404).

Setting engine speed

► Press the button on the multifunction steering wheel repeatedly until the input window Rotational speed is displayed on the instrument cluster.

► In the input window Rotational speed, increase or reduce the engine speed using the SET or RES buttons.

Constant rpm control

When the constant rpm control is switched on, the electronic management system regulates the programmed working speed of the power take-off independently of the load.

Note

Regeneration is suppressed in working speed mode. Switch off the constant rpm control after the power take-off has finished operating. Otherwise regeneration cannot take place. In vehicles with a power take-off on the engine, other body-dependent functions can be activated in addition to keeping the constant-rpm control.

► Engage the transmission-driven or engine-driven power take-off (→ Page 404).

► **Activation:** Press the button below the multimedia display.

◁ The Switch menu is shown in the display.

► Press the button .

- **Deactivation:** Press the button below the multimedia display.
  - ◁ The Switch menu is shown in the display.
- Press the button .

Switching emergency operation mode of the engine-driven power take-off (NMV) on/off

Danger

Risk of injury by turning output shaft

With the engine running, the output shaft of the engine-driven power take-off is able to turn.

- Carry out emergency engagement of the engine-driven power take-off only with the vehicle stationary, the parking brake applied and the engine switched off.

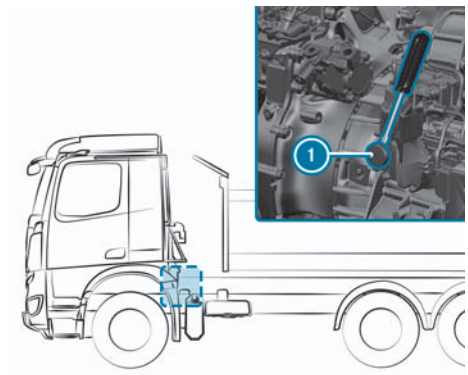

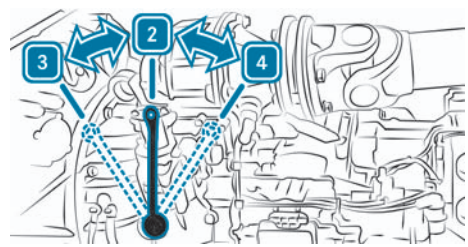

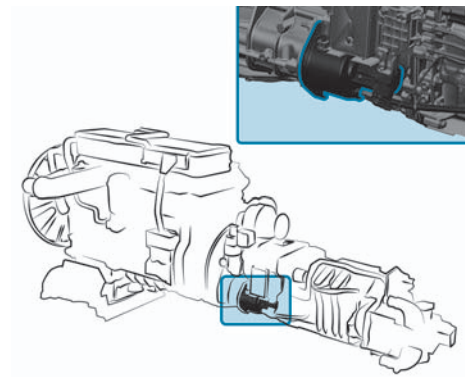

Clutch actuator in vehicles with power take-off (code N4W/N4X)

If the engine-driven power take-off (NMV) fails, a rigid connection of the power transmission in the power take-off can be established or disconnected. When deactivating manually, ensure that the power take-off is load-free (e.g. set pumps to zero delivery).

Note

The adapter for the emergency gear-shift during engine-driven power take-off (NMV) can be found in the vehicle document wallet.

Vehicles with power take-off (code N4W/N4X) can be identified by the external clutch actuator. If there is a cover plate in this position, then the vehicle is equipped with the power take-off (code N4Y/N4Z).

- Observe the power sequencing when using the engine-driven power take-off (NMV) (→ Page 404).

Engaging power take-off manually

- Apply the parking brake.
- Shift the transmission to neutral.
- Switch off the vehicle.
- Take the wrench, screwdriver and hammer out of the vehicle tool kit.
- Take the adapter out of the vehicle document wallet.
- Remove the cover cap (1) with a screwdriver and a hammer.
- Place the adapter on the shaft with the wrench in position [2].
- Turn the wrench to position [4].
- Remove the wrench and the adapter.
- Attach the cover cap (1).
- Start the vehicle.
- Press the [ ] button below the multimedia display.
  - ◁ The Switch menu is shown in the display.
- Press the button [ ].
  - ◁ If the power take-off is engaged, the instrument cluster displays the engagement status [ ] of the power take-off. The red indicator lamp within the [ ] button will light up.

Deactivating the power take-off manually

- Switch on the vehicle.
- Apply the parking brake.
- Shift the transmission to neutral.
- Press the power take-off switch [ ] at the bottom.
- Switch off the vehicle.
- Take the adapter out of the vehicle document wallet.
- Take the wrench, screwdriver and hammer out of the vehicle tool kit.
- Remove the cover cap (1) with a screwdriver and a hammer.
- Place the adapter on the shaft with the wrench in position [2].
- **Power take-off (code N4Y/N4Z):** Turn the wrench to position [3].

or

- **Power take-off (code N4W/N4X):** If the power take-off was previously activated automatically using the switch, turn the wrench to position [4].

or

- **Power take-off (code N4W/N4X):** If the power take-off was previously activated manually, turn the wrench to position [3].
- Remove the wrench and the adapter.
- Attach the cover cap (1).
- Press the [ ] button below the multimedia display.

◁ The Switch menu is shown in the display.

► Press the button [ ].

◁ If the power take-off is disengaged, the instrument cluster displays the engagement status [ ] of the power take-off. The red indicator lamp in the button [ ] will go out.

Tipper mode

How tipper mode works

To activate the tipper body and other functions, controls for pneumatic master and actuating valves can be fitted on the door side next to the driver's seat. If so, the door trim is adapted to provide adequate space. The control knob and pull switch can also be fitted in multiple ways and in different combinations, depending on the function.

The following functions are examples and are displayed on a sticker next to the controls in the cab's doorway. For the actual function selected, observe the tipper or body manufacturer's operating instructions.

Sensor valve for tipper control

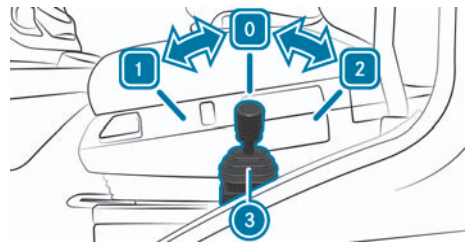

Tipper body operating lever

[1] Lower tipper body

[0] STOP – stop the tipping or lowering movement

[2] Raise tipper body

(3) Operating lever with pull ring

The operating lever (3) will engage in position [2]. To move the operating lever in or out of position [2], pull the pull ring on the operating lever.

Actuating valves for switching or activating

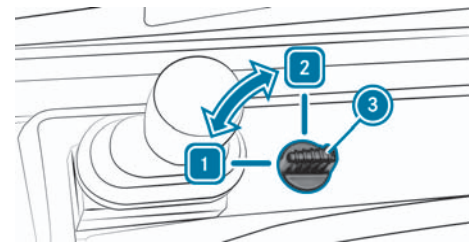

Switching trailer operation

[1] Activate tipper body on towing vehicle

[2] Activate tipper body on trailer

Switching crane operation

[1] Tipper function

[2] Crane function

Activating rear wall claw-type lock

[1] Unlock claw-type locks

[2] Lock claw-type locks

(3) Control knob

Actuating valve for on-board computer

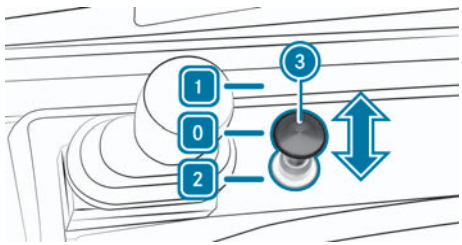

On-board computer

1	Open dropside
0	STOP – stop movement
2	Close dropside
3	Pull switch

Retracting/extending the tipper

Before tipping

Danger

Risk of accident if the exterior lighting is covered by the side board

If you open the rear side board, the rear exterior lighting is covered.

This could delay other road users in recognising the vehicle as an obstacle.

- Secure the rear area of the vehicle according to the national requirements, e.g. using a warning triangle.

Danger

Risk of burns caused by a hot exhaust system

The vehicle exhaust system can become very hot.

- Use only the steps and grab handles provided for this purpose.
- Never climb over the exhaust system to reach from the cab to the add-on equipment.
- When working on add-on equipment near the exhaust system, always keep a sufficient safe distance and wear protective gloves.
- Observe the notes under "Using steps" (→ Page 417).

Note

Damage to the chassis by lifting the front wheels

If a container is picked up or set down, the front wheels may lift.

- Only couple up or pick up swap-body platforms or containers if the vehicle has been started.

Note

Damage to the vehicle due to excessive axle loads

If the maximum permissible axle load is exceeded platform-type swap bodies or containers are tilted, rolled or deposited, the vehicle may be damaged.

The tyres, chassis frame and axle may be damaged.

- Do not exceed the maximum permissible axle load specified in the body/equipment mounting directives.

You must complete the connection between the subframe and the chassis in the crane area. This can be done with either a crane mounting or another adequate mounting. Comply with the body/equipment mounting directives. Tipper operation is not permitted if you do not complete the connection. Observe the safety regulations and the separate operating instructions of the tipper manufacturer.

When the dumper pump (power take-off) is engaged, you can select any pulling away gear or reverse gear while stationary. Changes of direction are only permitted in the selected gear. Do not change gears while driving. In vehicles with automated manual transmission, the transmission will change automatically when the tipper pump is switched to the manual drive program M.

Unless otherwise stated in the tipper manufacturer's operating instructions, ensure that the low-speed splitter box has been selected.

- Park the vehicle on a firm and level surface.
- Apply the parking brake.
- Check and secure the pins on the tipper body; see the tipper manufacturer's separate operating instructions. The tipper body must be secured with the pins on the side to which the load is to be tipped. The pins have different shapes to prevent them being mixed up or inserted diagonally.
- Start the vehicle.
- Switch on the tipper pump (power take-off) (→ Page 404).
  - ◁ The chassis is lowered automatically. The display shows the symbol for chassis below driving level.
- Open the side or ensure that the side unlocks and opens if automatic release/locking mechanisms are fitted. See the separate operating instructions from the tipper manufacturer.

Tipping

- Make sure that nobody is in the tipping area.
- Observe the tipper manufacturer's operating instructions.

After tipping

- Close the side or ensure that the side closes and locks if automatic release/locking mechanisms are fitted. See the separate operating instructions from the tipper manufacturer.
- Switch off the tipper pump (power take-off) (→ Page 404).
- Raise the chassis to driving level (→ Page 334).
  - ◁ The symbol for chassis below driving level will disappear from the display.

Notes on cleaning the interior

Danger

Risk of injury due to plastic parts coming loose after using solvent-based care products

The surfaces in the cockpit may become porous. Plastic parts may come loose when the airbag is deployed.

- ► Do not use solvent-based care products or cleaning agents to clean the cockpit.

Danger

Risk of injury or fatal injuries from bleached seat belts

Bleaching or dyeing seat belts can severely weaken them.

This can, for example, cause seat belts to tear or fail in an accident.

- ► Never bleach or dye seat belts.

Note

Environmental pollution due to disposal in an environmentally irresponsible manner

Incorrectly disposing of cleaning and care products can cause considerable damage to the environment.

- ► Dispose of cleaning and care products in an environmentally responsible manner.

Note

Daimler Truck AG recommends that you only use care products that have been approved for Mercedes-Benz trucks.

These care products are available from an authorised Mercedes-Benz Trucks Service Centre.

Observe the following points when wet cleaning the vehicle interior:

- Never use a high-pressure cleaner.
- Make sure that no fluids can enter or remain in gaps and cavities.
- Ensure that there is sufficient ventilation when cleaning.
- Ensure that the vehicle interior completely dries following cleaning.

Seat belts

- Clean with lukewarm and soapy water.
- Do not use chemical cleaning agents.
- Do not dry seat belts by heating them to over 80 °C or exposing them to direct sunlight.

Cold foam mattress cover

- Wash at a maximum temperature of 30 °C.

Displays

- Switch off the display and let it cool down.
- Clean the surface carefully with a cotton or microfibre cloth and a display care product (TFT-LCD) recommended for Mercedes-Benz trucks.
- Do not use any other cleaning products.

Plastic trims

- Clean with a damp microfibre cloth.
- In case it is very dirty: Use cleaning agents that have been recommended for Mercedes-Benz trucks.
- Do not use solvent-based care products and cleaning agents.
- Do not attach stickers, films or similar materials.
- Do not bring into contact with cosmetics, insect repellents or sun creams.

Trim elements

- Clean with a microfibre cloth.
- In case it is very dirty: Use cleaning agents that have been recommended for Mercedes-Benz trucks.
- Do not use solvent-based cleaning agents, polishes or waxes.

Genuine leather seat covers

- Clean with a damp cloth and then wipe with a dry cloth.
- Leather care: Use leather care agents that have been recommended for leather upholstery for Mercedes-Benz Trucks.
- Do not allow the leather to become too damp.
- Do not use the microfibre cloth.
- Do not clean the seat cushions and backrests using steam cleaners or cleaning fluids.

Imitation leather seat covers

- Clean with a damp cloth and 1% soapy water.
- Do not use the microfibre cloth.
- Do not clean the seat cushions and backrests using steam cleaners or cleaning fluids.

Cloth seat covers

- Clean with a damp microfibre cloth and 1% soap solution and allow to dry.
- Do not clean the seat cushions and backrests using steam cleaners or cleaning fluids.

Steering wheel and gearshift lever

- Clean with a damp cloth and mild soapy water.
- Wipe over again with a dry cloth.
- Do not use solvent-based cleaning and care products.
- Do not allow fluids with sticky ingredients to come into contact with the steering wheel or the steering wheel buttons.

For leather upholstery:

- Use leather care agents that have been recommended for leather upholstery for Mercedes-Benz Trucks.
- Do not use the microfibre cloth.

Notes on the use of a high-pressure cleaner

Notes on the use of a high-pressure cleaner

Danger

Risk of accident when using high-pressure cleaners with round-spray nozzles (dirt grinders)

The water jet can cause injuries and non-visible damage to the vehicle.

Damaged components may fail unexpectedly.

- Do not use a high-pressure cleaner with round-spray nozzles.
- Have damaged tyres or suspension components replaced as soon as possible.

Note

Damage due to the use of a high-pressure cleaner in the vehicle interior

The volume of water generated under pressure by the high-pressure cleaner and the associated spray may cause significant damage to the vehicle.

- Do not use a high-pressure cleaner in the vehicle interior under any circumstances.

Note

Component damage due to the use of a high-pressure cleaner

The following vehicle components can be damaged through direct application of a high-pressure cleaner:

Door gaps, air suspension bellows, brake hoses, balancing weights, electrical components, electrical connectors, and seals.

- Do not point the water jet at these components.

When using high-pressure cleaning, keep a minimum distance of 50 cm between the atomiser nozzle and the vehicle parts and use clean, warm water up to 50 °C.

Set the water pressure on the high-pressure cleaner to a maximum of 50 bar.

Keep the water jet moving constantly while cleaning.

Notes on the use of automatic car washes

Note

Damage when using an automatic car wash

If, when using an automatic car wash, the outside mirrors/camera arms are folded out or the windscreen wipers are activated, they may be damaged.

Before using an automatic car wash:

- Deactivate the windscreen wipers.
- Vehicles with external mirrors: Fold in the outside mirrors.
- Vehicles with folding MirrorCam camera arm: Fold in the camera arms.

Make sure that the outside mirrors or camera arms of the MirrorCam system are fully folded out again when you leave the automatic car wash.

If the vehicle is very dirty, wash off excess dirt before cleaning the vehicle in an automatic car wash.

Note

After using an automatic car wash, wipe off the wax from the windscreen and the wiper rubbers. This will prevent smearing and reduce wiper noises caused by residue on the windscreen.

Notes on cleaning the exterior

Danger

Risk of an accident due to reduced braking effect after washing the vehicle

The braking effect of the brakes is reduced after washing the vehicle.

- After the vehicle has been washed, brake carefully while paying attention to the traffic conditions until the braking effect has been fully restored.

Danger

Risk of fire due to flammable materials or loaded goods coming into contact with the exhaust system

Flammable materials or flammable cargo may ignite on hot parts of the exhaust gas aftertreatment system.

- Before every journey, check whether flammable materials or loaded goods have accumulated around and/or on parts of the exhaust gas aftertreatment system and use suitable tools (e.g. compressed air) to remove them.

Note

Environmental pollution due to disposal in an environmentally irresponsible manner

Incorrectly disposing of cleaning and care products can cause considerable damage to the environment.

- Dispose of cleaning and care products in an environmentally responsible manner.

Note

Environmental damage due to improper cleaning of the vehicle exterior

If you clean the vehicle exterior in a washing bay that is not intended for this purpose, this may environmentally harmful operating fluids and cleaning agents into the environment.

- Find a suitable washing bay for cleaning the vehicle exterior.

Note

Daimler Truck AG recommends that you only use care products that have been approved for Mercedes-Benz trucks.

These care products are available from an authorised Mercedes-Benz Trucks Service Centre.

If you are cleaning higher parts of the vehicle, follow the instructions for the steps and grab handles (→ Page 417).

If you use a high-pressure cleaner to clean the vehicle, also observe the

Notes on cleaning the exterior

"Notes on using a high-pressure cleaner" (→ Page 414).

Paintwork

Note

Paintwork damage caused by very stubborn or aggressive dirt and debris

For example, the following types of dirt and debris may cause lasting damage to the paintwork:

- Insect residues
- Bird excrement
- Flash rust
- Tree resins
- Oils and greases
- Fuels
- Tar splashes
- Road salt residues

► These types of dirt or debris must be removed as soon as possible.

Vehicles with chassis protection seal for Mercedes-Benz trucks

Remove corrosion-inducing substances with water after every use.

Check the anti-corrosion protection before and after snow-clearing operations and improve it if necessary.

To prevent damage to the chassis protection seal for Mercedes-Benz trucks, observe the following instructions when cleaning the vehicle:

- Do not use a high-pressure cleaner.
- use a maximum water pressure of 3 bar for cleaning.
- clean the vehicle using water no hotter than 40°C.
- Use a neutral cleaner in the mixing ratio specified by the manufacturer and do not use alkaline or acidic products.
- Do not use any petrol-based substances, rape seed oil, petrol, diesel or other solvents.

Radiator surface

Note

Engine overheating due to damaged or dirty radiator fins

If the radiator fins are deformed or dirty, this may result in reduced engine cooling. The engine may overheat.

► Observe the instructions for external cleaning.

Only direct the compressed air, steam, or water jet perpendicular to the radiator surface. Ensure that the radiator fins are not damaged during cleaning.

Have loss of coolant or damage checked at a qualified workshop.

BlueTec® exhaust gas after-treatment system

Note

Damage to the BlueTec® exhaust gas after-treatment system due to improper cleaning

Cleaning the system while it is warm or spraying water directly into the exhaust pipe may damage the BlueTec® exhaust gas after-treatment system.

- Only clean the system when it is cold.
- Do not direct the water jet into the exhaust pipe.

Light-alloy wheels

Note

Corrosion of the wheel nuts due to the use of incorrect cleaning agents

Using acidic or alkaline cleaning agents to clean light-alloy wheels may cause corrosion to the wheel nuts or the safety springs of the balance weights.

- Use cleaning agents that have been recommended for Mercedes-Benz trucks.

Clean the light-alloy wheels regularly.

Exterior lighting

Note

Damage to the exterior lighting due to improper cleaning

Using unsuitable cleaning agents and cleaning cloths may scratch or damage the plastic covers of the exterior lighting.

- Do not use corrosive or solvent-based cleaning agents.
- Clean the plastic covers with a soft brush and a neutral cleaning agent.

Using steps

Danger

Risk of injury from unlocked steps

When the step is folded down, it may swing to the side when climbing into or down from the vehicle. This may cause you to slip and/or fall from the step.

- Always lock the folded-down step before entering the vehicle.

Danger

Risk of injury if unsuitable climbing tools are used

If you use openings in the bodywork or attachments as steps, you may slip and/or fall.

You may also damage the vehicle and fall as a result.

- Always use nonslip and stable climbing aids, e.g. a suitable ladder.

Danger

Risk of burns caused by a hot exhaust system

The vehicle exhaust system can become very hot.

- Use only the steps and grab handles provided for this purpose.
- Never climb over the exhaust system to reach from the cab to the add-on equipment.
- When working on add-on equipment near the exhaust system, always keep a sufficient safe distance and wear protective gloves.

Note

Damage due to driving with the step folded down

If you drive with the step folded down when driving off road, for example, it may touch the carriageway and become damaged.

- Fold up the front step before starting a journey and lock it if necessary.

- Steps and grab handles from dirt and debris (e.g. mud, clay, snow, ice).
  - ◁ This will improve the safety of your footing.

Steps, front (example: Actros L–cab)

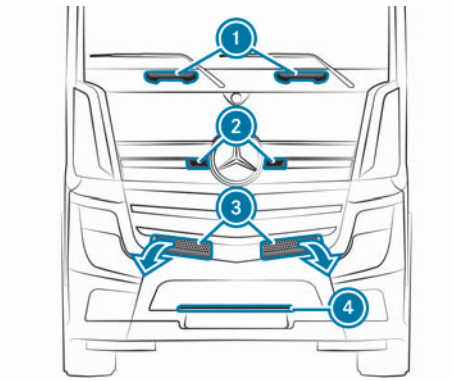

Steps and grab handles

- Swivel the folding steps ③ forwards.
- When cleaning the vehicle, use steps ④ and ③ grab handles ①.
- To access grab handles ① more easily and safely, use handle recesses ②.

Small folding step, front

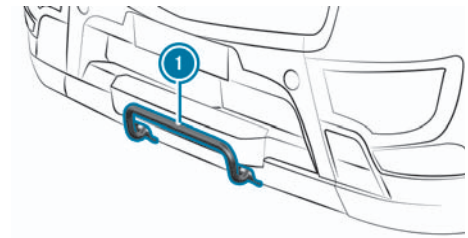

Small folding step, front (example)

- **To fold down:** Swing step ① down as far as it will go.
- **To fold up:** Swivel step ① upwards until it engages.

Large folding step, front

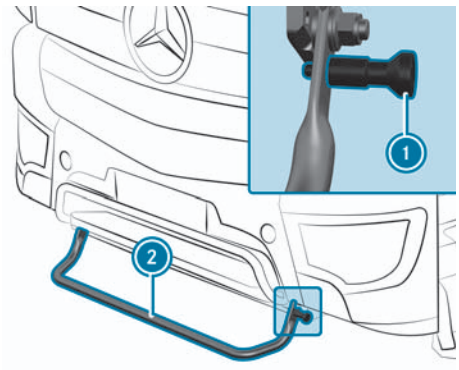

Large folding step, front (example)

- **To fold down:** Push step ② slightly upwards, pull retainer ① and swivel step ② downwards as far as it will go.
- **To fold up:** Pull retainer ① and swivel step ② upwards until it engages.
- Make sure that the retainer ① has engaged on both sides.

Steps, front (example: Actros ProCabin)

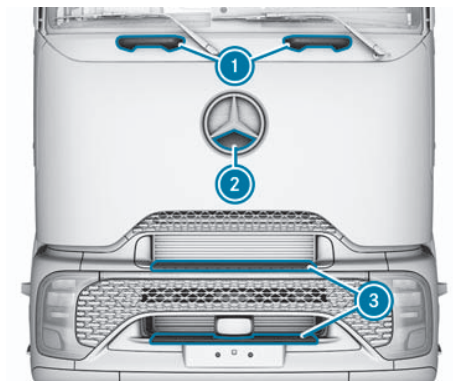

- Use the steps ③ and grab handles ① when cleaning the vehicle.
- To access grab handles ① more easily and safely, use handle recess ②.

Side steps

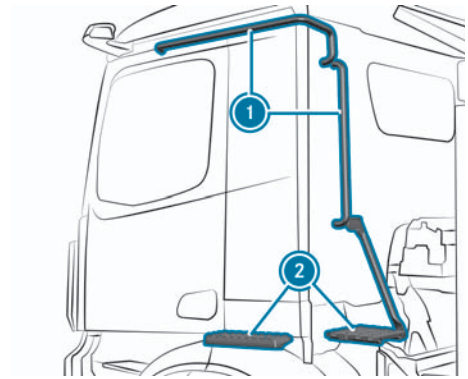

Steps and grab handle (example: tipper vehicle)

Using steps

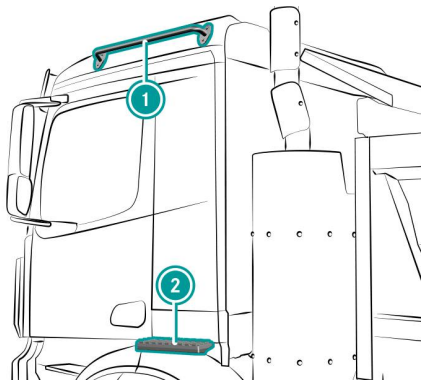

Steps and grab handle (example: Arocs with upright exhaust system)

To enter safely from the side:

- Use grab handle 1 and steps 2.

Steps on semitrailer trucks (example: Actros with L-cab)

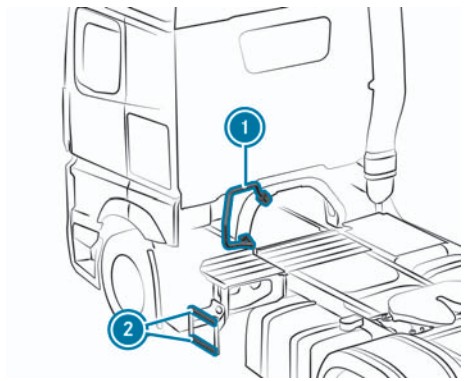

Steps and grab handle (example: Actros semitrailer truck without side trim)

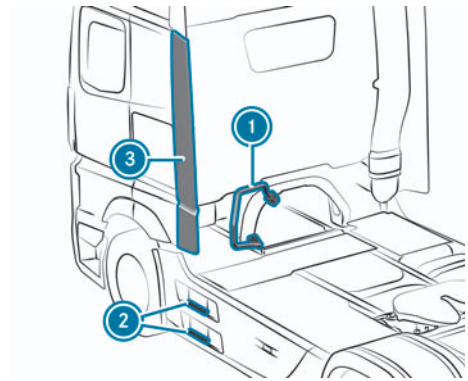

Steps and grab handle (example: Actros semitrailer truck with side trim)

- Vehicles with side deflector 3: Swivel the side deflector 3 inwards.
- Use the steps 2 and grab handle 1 when cleaning the vehicle.

Steps on semitrailer trucks (example: Actros with ProCabin)

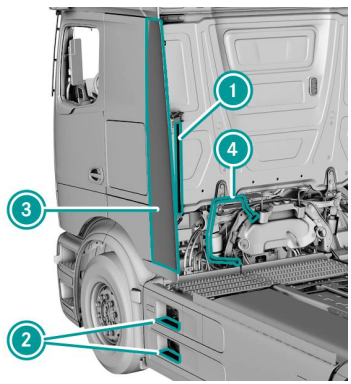

Steps and grab handles (example)

- Close the stowage compartment flap and pull the lower edge of the side deflector 3.
  - ◁ The side deflector 3 swivels forwards.
- Use the steps 2 and grab handles 1 when 4 cleaning the vehicle.

Cleaning the sensors

If you need to clean elevated areas of the vehicle:

- Use the steps and grab handles on the vehicle (→ Page 417) or no-slip and stable climbing aids.

Cleaning the MirrorCam system camera

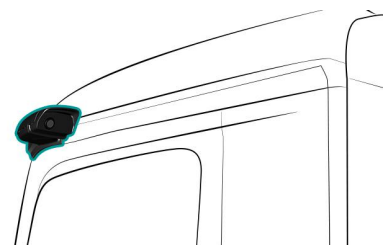

Camera housing (example: left-hand side of the vehicle)

Keep the camera lenses clean and free of snow or ice. Wet stubborn dirt on the camera lenses with water. Then clean the camera lenses using commercially available glass cleaner and a damp cloth.

Do not clean the camera lenses using a dry cloth.

Accumulated snow and ice are removed by the camera heating when the MirrorCam system is activated.

- Regularly clean the camera of the MirrorCam system to prevent malfunctions.

Clean the windscreen in the area of the rain/light sensor and multifunction camera

Danger

Risk of becoming trapped if the windscreen is being cleaned while the windscreen wipers are activated

If the windscreen wipers begin to move while you are cleaning the windscreen or wiper blades, you could become trapped.

- Always switch off the windscreen wipers and the vehicle before cleaning the windscreen or wiper blades.

Cleaning the sensors

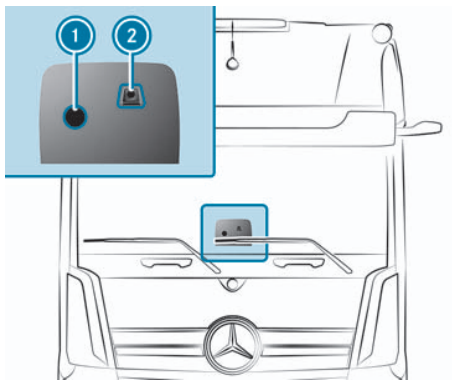

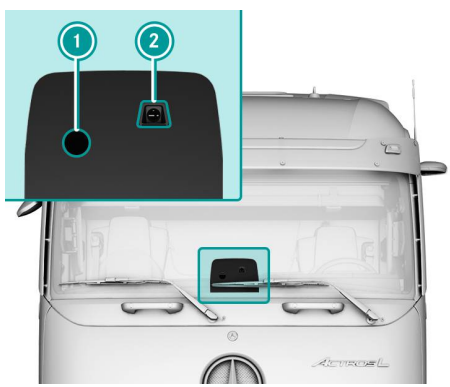

- Regularly clean the windscreen in the area of rain and light sensor (1) and camera (2) to prevent malfunctions.

Note

If the windscreen is damaged around the rain and light sensor as well as the camera, the functionality of various driving assistance/driving safety systems and the rain and light sensor may be impaired. Have the windscreen replaced at a qualified specialist workshop.

Note

Note that it is only permissible to replace the windscreen with a windscreen approved by Daimler Truck AG.

Cleaning the reversing camera

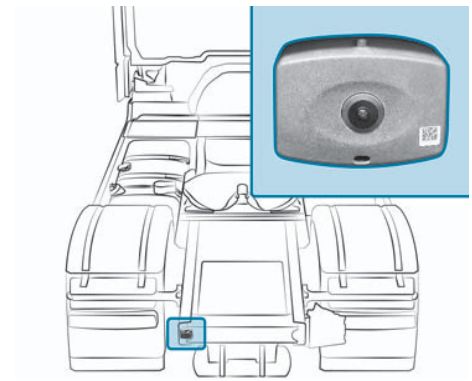

Reversing camera (example)

Note

The position of the reversing camera may vary depending on the body and chassis frame.

Keep the camera lenses clean and free of snow or ice. Wet stubborn dirt on the camera lenses with water. Then clean the camera lenses using commercially available glass cleaner and a damp cloth. Do not clean the camera lenses using a dry cloth.

- To prevent malfunctions, regularly clean the reversing camera.

Cleaning the distance sensors

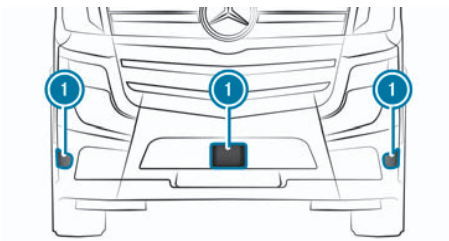

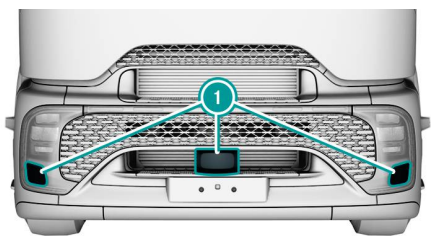

Distance sensors (example)

- Regularly clean the distance sensors (1) to prevent malfunctions.

Note

If the distance sensors are dirty, the Assistance systems malfunction Distance sensor viewing area blocked display message appears in the instrument cluster.

Cleaning the Sideguard Assist/Active Sideguard Assist sensor

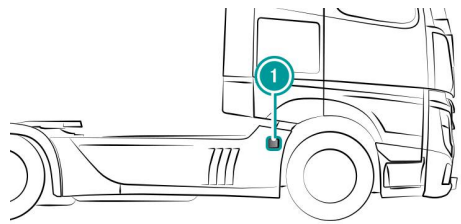

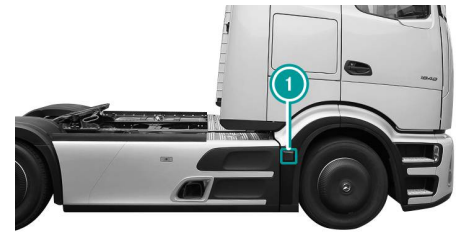

Sideguard Assist/Active Sideguard Assist sensor (example)

- Clean the (1) sensor regularly with water, shampoo and a soft cloth to prevent malfunctions.

Notes on washing the engine

Note

Damage and malfunctions caused by washing the engine

To avoid damage to or malfunctions of the engine:

- When using high-pressure or steam cleaners, do not point the water jet directly at electrical components and the ends of electric cables.

Notes on washing the engine

- ► Make sure that no water enters the intake, vent and ventilation openings.
- ► Use preservative agents in the engine after having washed the engine.
- ► Protect the belt drive from preservative agents.

Only use wax engine preservative agents according to the Mercedes-Benz Trucks Specifications for operating fluids (→ Page 527).

Observe the "Notes on using a high-pressure cleaner" (→ Page 414).

Mercedes-Benz Trucks Service

Information about Service/maintenance work

Danger

Risk of accident due to malfunctions or system failure

If you do not have the prescribed service/maintenance work or any required repairs carried out, this may result in malfunctions or system failures.

- Always have the prescribed service and maintenance work, as well any required repairs, carried out at a qualified specialist workshop.

Always refer to the service and maintenance display of the maintenance system as well as the notes on the maintenance system.

Have the prescribed service and maintenance work, as well as additional maintenance work, carried out within the remaining time period or the remaining mileage.

Additional maintenance work that is not load-dependent and that is not calculated by the maintenance system is carried out at set time intervals.

Have the prescribed service and maintenance work, as well any additional maintenance work, carried out and documented in a timely manner and according to the specifications of Daimler Truck AG. Otherwise, it can lead to loss of warranty entitlements after a report has been presented by the manufacturer.

Work relevant to safety or on safety-relevant systems must be carried out at a qualified specialist workshop.

Daimler Truck AG is continually working to improve and further develop its vehicles and therefore reserves the right to make modifications to the scope of service and maintenance work.

Note

You can always obtain up-to-date information concerning the maintenance of your vehicle at any time from a qualified specialist workshop, e.g. a Mercedes-Benz Trucks Service Centre. This could include, for example, an overview of the service or maintenance work, or potentially any additional work.

Notes on special service requirements

For certain components, special service requirements may be necessary, e.g. after a running-in period.

Service and maintenance work will need to be performed more often or in addition if the vehicle is operated under arduous operating conditions or increased loads.

Note

You can obtain up-to-date information concerning the particular service requirements and service intervals of your vehicle at any time from a qualified specialist workshop. Daimler Truck AG recommends that you use a Mercedes-Benz Trucks Service Centre for this purpose.

24h breakdown assistance

For Korea only

For thorough, complete aftercare and customer satisfaction, Daimler Trucks Korea Ltd offers 24h breakdown assistance. Please inform us of any suggestions or about any inconveniences with the after-sales service, including 24h breakdown assistance. We will do everything in our power to improve these services.

Free service hotline: **080–001–1886**

Notes about engine oil change and oil filter replacement

The display informs you when an engine oil change and oil filter replacement is due.

If the engine oil and oil filter have not been replaced as part of engine maintenance within the previous two years, carry out the engine oil change and oil filter replacement as part of time-based maintenance.

The interval for replacing the engine oil and oil filter is dependent on the following factors:

- Engine oil grade
- Engine load
- Fuel grade
  The change interval will be reduced when operating the vehicle with fatty acid methyl ester. Always observe the notes on operating fluids in these operating instructions. Make sure that your vehicle is permitted for operation with fatty acid methyl ester.

Notes on the oil change intervals for the major assemblies

Daimler Truck AG recommends using oil of the same quality grade as that used at the factory.

If the oil quality grade differs from that used at the factory, the oil change interval changes for the assembly in question.

Depending on the vehicle, you can set the oil quality grade in the maintenance system. Proceed as follows:

- If the major assembly in question is displayed in the maintenance system: Set deviating oil quality level in maintenance system.
- If the major assembly in question is not displayed in the maintenance system: Have the deviating oil quality level set in the maintenance system at a qualified specialist workshop.

Observe the notes on operating fluids in particular.

Digital maintenance documentation

Maintenance Documentation

Service and maintenance work that has been performed is confirmed in our central database. You can obtain a printout of the maintenance documentation.

Your vehicle's service data is thus thoroughly documented and can no longer be lost. Every authorised Service Partner can provide you with information on your

vehicle's current service data. This means that you can be assisted as quickly as possible, regardless of your location.

Vehicles without digital maintenance documentation

The maintenance booklet confirms that all service and maintenance work has been carried out at a qualified specialist workshop.

Notes on the maintenance system

Danger

Risk of accident due to malfunctions or system failure

If you do not have the prescribed service/maintenance work or any required repairs carried out, this may result in malfunctions or system failures.

- ► Always have the prescribed service and maintenance work, as well any required repairs, carried out at a qualified specialist workshop.

Note

Environmental pollution due to disposal in an environmentally irresponsible manner

If you have to do some maintenance work yourself for operating reasons, follow environmental protection requirements while you do so. When disposing of operating fluids, e.g. engine oil, you must comply with the legal requirements. This also applies to all parts, e.g. filters, that have been in contact with operating fluids.

- ► Dispose of empty containers, cleaning cloths, and care products in an environmentally responsible manner.
- ► Observe the instructions for care products.
- ► Do not leave the engine running for longer than necessary while the vehicle is stationary.

In menu Status, menu item Maintenance of the multimedia system, you can set the following, for example:

- fuel grade
- resetting the values of the turbo retarder clutch
- the state of the diesel particulate filter

The maintenance system calculates maintenance due dates for the vehicle and its major assemblies based on the vehicle's operating conditions.

You must secure the vehicle on jack stands of sufficient load capacity if work is being carried out underneath the vehicle.

When working on the vehicle, comply with all safety regulations, such as the operating instructions, regulations concerning hazardous materials, environmental protection measures, as well as work safety and accident prevention regulations.

Do not clean the filter elements of the air filter. Otherwise, the liability for material defects will be invalidated and you may

damage the engine. Replace the air filter inserts.

You can call up the maintenance due dates calculated for the vehicle and its major assemblies in the on-board computer.

The display message for the maintenance due dates appears in the instrument cluster for the first time 14 days before they are due.

Note

A qualified workshop can program the first message to appear between 0 to 30 days before the due date.

If you switch on the vehicle and a service appointment is imminent or due, the service appointment will appear in a grey display message (→ Page 541).

If you miss a service appointment, the service appointment will appear in a yellow display message (→ Page 541).

The maintenance system automatically notifies you of service appointments. Examples of this are:

- Air filter, 12/08/2020, 3000 km
  Maintenance dates are displayed for the first time 14 days before they are due.
- Air filter, Maintenance due
  The maintenance date is due.
- Air filter, Maintenance due immediately
  The maintenance due date has been exceeded.

Open/close maintenance flap

The fans for the capacitor are under the maintenance flap on vehicles with an electric stationary air-conditioning system.

Danger

Risk of injury due to moving parts

The fans on the capacitor run when the stationary air conditioning system is being operated. You may continue to run or start unexpectedly even when the engine is switched on.

If the maintenance flap needs to be opened:

- ▶ Remove jewellery and watches.
- ▶ Never reach into the rotation area of the fans.
- ▶ Keep items of clothing and hair away from the fans.

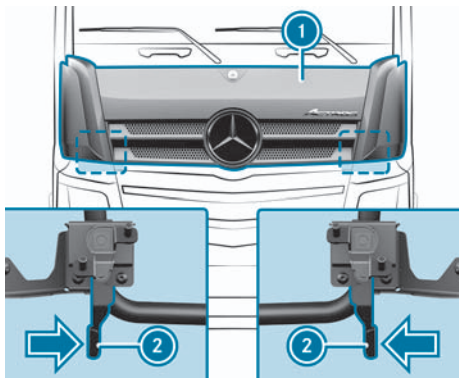

The release levers are below the lateral panelling above the headlamps.

- **To release:** Press release levers ② on the left and right one after the other in the direction of the arrow.
- **To open:** Swing the maintenance flap ① upwards.
- **To close:** Swing maintenance flap ① downwards until it engages audibly.

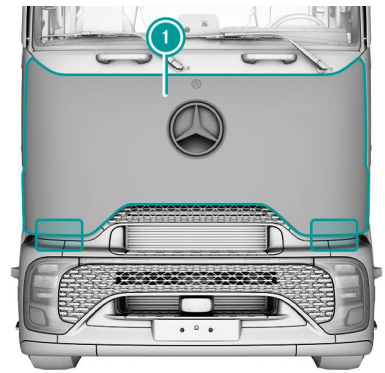

- **To unlock:** Pull the release levers on the lower edge of the left and right maintenance flap downwards one after the other.
- **To open:** Swing the maintenance flap ① upwards.

Note

The maintenance flap can be opened in two stages. When the first stage is reached, you can increase the opening angle by swivelling the maintenance flap farther upwards.

- **To close:** Swing maintenance flap ① downwards until it engages audibly.

Overview of maintenance points under the maintenance flap

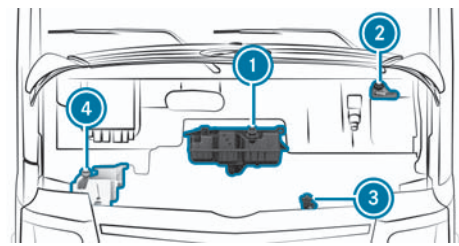

Maintenance points

① Coolant expansion reservoir with turquoise cap (→ Page 430)

② Hydraulic clutch operation system with green cap (→ Page 432)

③ Engine oil filler neck with black cap (→ Page 436)

④ Washer fluid reservoir with black cap (→ Page 432)

Check the coolant level

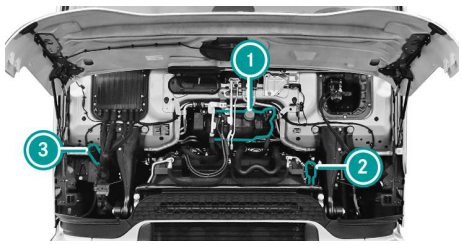

Maintenance points

1. Coolant expansion reservoir with turquoise cap (→ Page 430)
2. Engine oil filler neck with black cap (→ Page 436)
3. Washer fluid reservoir with black cap (→ Page 432)

Check the coolant level

Danger

Risk of scalding from hot coolant

You may be scalded if you open the cap.

- ► Allow the engine to cool down before you open the cap.
- ► When opening the cap, wear protective gloves and safety goggles.
- ► Open the cap slowly to release pressure.

Note

Engine damage as a result of the coolant level being too low

Engine damage may occur if the vehicle is operated with a coolant level that is too low.

- ► Check the coolant level regularly and top up the coolant if necessary.

Requirements

- The vehicle is parked on a level surface.
- The parking brake is applied.
- The vehicle is switched off.

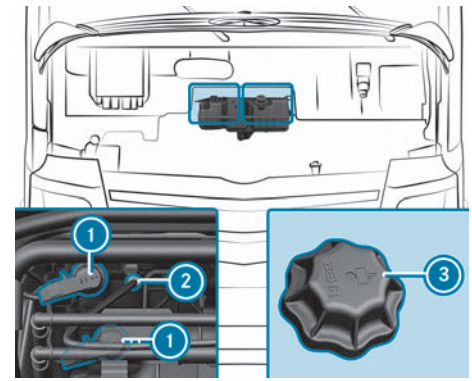

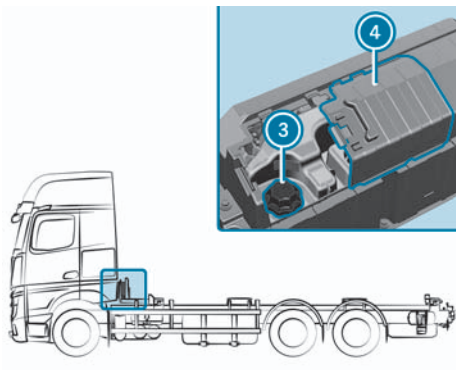

The coolant expansion reservoir may be located below the maintenance flap or on the rear of the cab.

Vehicles with a retarder are equipped with a coolant pressure regulator. The coolant pressure regulator regulates and monitors the system pressure in the engine cooling system.

If the yellow display message Coolant pressure regulation faulty appears on the instrument cluster, check that the electrical plug connections ① and hose connections ② are securely connected. The hose fitting ② and turquoise cap ③ must be leak-free. If you are unable to find any leaks, have the engine cooling system checked at a qualified workshop.

If the coolant level in the coolant expansion reservoir is too low, the following display messages may be shown:

- (→ Page 541)
- (→ Page 541)

The coolant expansion reservoir can only be opened at a coolant temperature of under 50°C. The coolant level can only be checked correctly when the coolant temperature is between 0°C and 25°C.

If the engine cooling system has to be refilled, contact a qualified workshop.

- ► Check the coolant temperature on the on-board computer (→ Page 169).
- ► Observe the notes on operating fluids (→ Page 527) and coolants (→ Page 530).
- ► Vehicles with a coolant expansion reservoir below the maintenance flap: Open the maintenance flap (→ Page 428).
- ► Vehicles with a coolant expansion reservoir behind the cab: Screw on cover ④.

Note

On vehicles with coolant expansion reservoir behind the cab, make sure your footing is secure when refilling the coolant.

- ► Slowly turn turquoise cap ③ anti-clockwise to release the overpressure.
- ► Continue turning turquoise cap ③ and remove it.
- ► Check the coolant level. The coolant in the coolant expansion reservoir must reach to the edge of the filler neck.
- ► If necessary, refill with a coolant approved for Mercedes-Benz trucks.
- ► Put on the turquoise cap ③ and tighten it as far as it will go.
- ► Vehicles with a coolant expansion reservoir below the maintenance flap: Close the maintenance flap.

Checking hydraulic fluid level of the clutch operation system

- Vehicles with a coolant expansion reservoir behind the cab: Slide cover ④ shut.

Checking hydraulic fluid level of the clutch operation system

Note

Damage to the clutch operation system due to filling with incorrect hydraulic fluids

To prevent damage:

- Do not refill with hydraulic fluid of a different quality grade or brake fluid.

Note

Damage to the clutch operation system due to excessively low fluid level

The hydraulic system may be leaking if the fluid level in the hydraulic clutch operation system expansion reservoir is below the minimum mark.

- Have the hydraulic system checked at a qualified workshop.

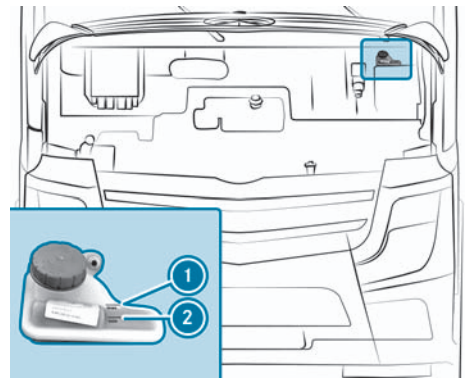

The hydraulic fluid for the clutch operation system must meet the specifications in the Mercedes-Benz Trucks Specifications for Operating Fluids.

It is not necessary to renew the hydraulic fluid in the hydraulic clutch operation system.

- Open the maintenance flap (→ Page 428).
- Check the fluid level at the expansion reservoir. The fluid level must be between the max. ① and min. ② markings.
- Close the maintenance flap.

Topping up the windscreen washer system

Danger

Risk of fire and injury from windscreen washer concentrate

Windscreen washer concentrate is highly flammable. It could ignite if it comes into contact with hot engine component parts or the exhaust system.

- Make sure that windscreen washer concentrate is not spilled next to the filler opening.

Topping up the washer fluid

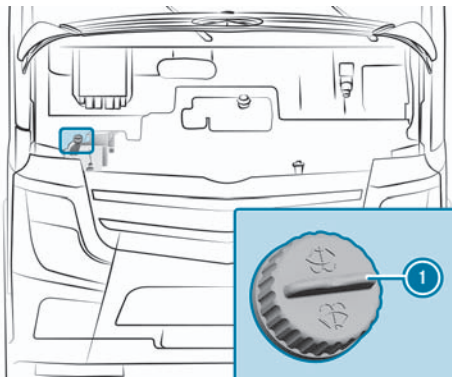

Depending on the vehicle version, the washer fluid reservoir for the windscreen washer system and the headlamp cleaning system can hold approx. 10 l or 15 l.

If the washer fluid level in the washer fluid reservoir is too low, the instrument cluster will display a grey message with the symbol.

Add a concentrated windscreen washer concentrate to the washing water all year round in accordance with Mercedes-Benz Trucks Specifications for Operating Fluids.

Adapt the mixing ratio to the outside temperature.

At temperatures above freezing, add a windscreen washer concentrate for the summer to prevent smearing. If there is a risk of frost, use a windscreen washer concentrate for winter to prevent the washer fluid from freezing on the windscreen.

- Observe the notes on operating fluids (→ Page 527).
- Pre-mix the washer fluid to the correct mixing ratio in a container.
- Open the maintenance flap (→ Page 428).
- Unscrew and remove cap (1) from the washer fluid reservoir.
- Top up the washer fluid reservoir .
- Replace cap (1) and screw it on.
- Close the maintenance flap.

Cleaning the cyclone dust pre-separator

Note

Damage to the air filter due to tapping, blowing or washing out

Tapping, blowing or washing out the filter medium may lead to structural changes and damage. in this case, the required separation efficiency of the filter element can no longer be guaranteed.

Increased wear and shortened service life of the engine is to be expected.

the liability for material defects is invalidated.

- Do not clean the filter elements of the air filter.
- Replace the filter elements of the air filter.

Cleaning the coarse filter for heating and climate control

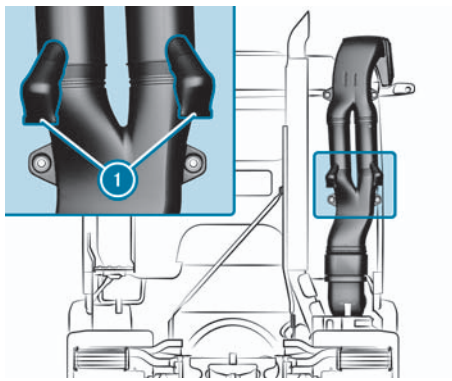

The cyclone dust pre-separator is integrated in the inlet duct and extends the service life of the air filter. When operating with a high dust load, empty the discharge valves (1) at least once a week or daily if necessary. Have damaged discharge valves (1) replaced by a qualified specialist workshop.

- Stop the vehicle.
- Apply the parking brake.
- Switch off the vehicle.
- Place a container under the discharge valves (1).
- Press the discharge valves (1) together.

Cleaning the coarse filter for heating and climate control

A combination or pollen filter is marked with the letter "C" or "P" on the top and must not be cleaned. They must be replaced.

A coarse filter is clearly marked with the letter "B" on the top and may only be tapped out or blown out.

When you are using compressed air to blow out the filter, keep a minimum distance of 20 cm between the compressed air nozzle and the filter. Tap or blow out the coarse filter carefully and only opposite to the airflow direction indicated. The airflow direction is marked with arrows on the top of the coarse filter.

Careless or incorrect cleaning can damage the coarse filter.

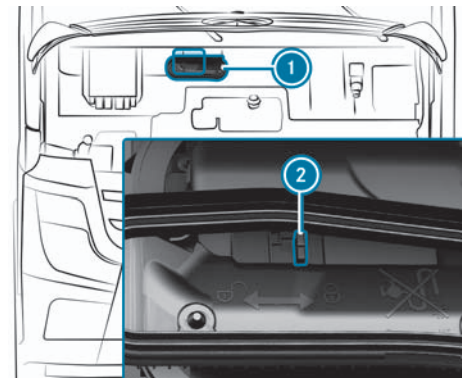

- Open the maintenance flap (→ Page 428).
- Slide catch (2) on air intake duct (1) in direction [🔓].
- Remove air intake duct (1).
- Pull the coarse filter out of the duct.
- Tap out or blow out the coarse filter.
- Push the coarse filter into the duct. Pay attention to the airflow direction indicated by arrows on the upper side. The arrows must point downwards.
- Fit air intake duct (1).

- Slide catch (2) on air intake duct (1) in direction [🔓].

Replacing the wiper blades

Danger

Risk of injury due to unsuitable climbing aid

When you use the steps and grab handles at the front of the vehicle, you may slip and/or fall.

- Always use nonslip and stable climbing aids, e.g. a suitable ladder.

Danger

Risk of becoming trapped if the windscreen wipers are switched on while wiper blades are being replaced

If the windscreen wipers begin to move while you are changing the wiper blades, you can be trapped by the wiper arm.

- Always switch off the windscreen wipers and the vehicle before replacing the wiper blades.

Note

Damage to the maintenance flap or windscreen by the wiper arm

To prevent damage:

- If a wiper arm is folded forwards, do not open the maintenance flap.
- Do not fold the wiper arms against the windscreen without the wiper blades attached.

Removing the wiper blades

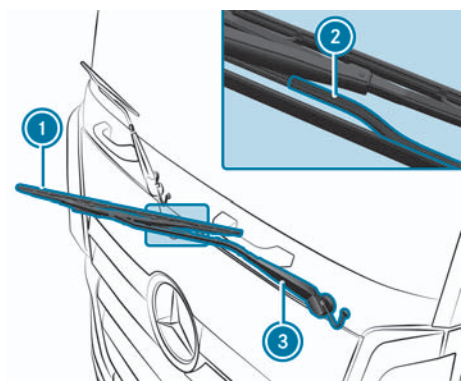

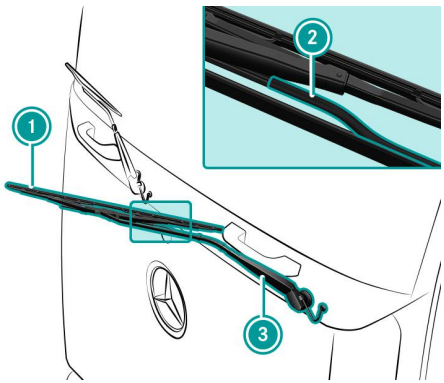

Wiper blades are wear parts. Replace the wiper blades at least once a year. Otherwise, the windscreen will not be wiped properly.

- Fold wiper blade (1) and wiper arm (3) away from the windscreen.
- Remove hose (2) from the pipe jet.

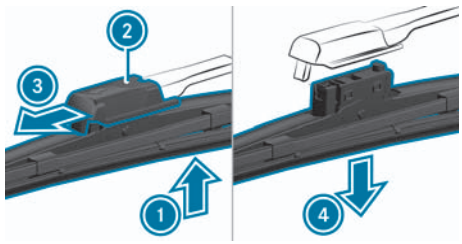

- Push the wiper blade in the direction of arrow ① onto the wiper arm as far as it will go.
- Slide catch ② in the direction of arrow ③ until it engages in the removal position.
- Remove the wiper blade from the wiper arm in the direction of arrow ④.

Fitting the wiper blades

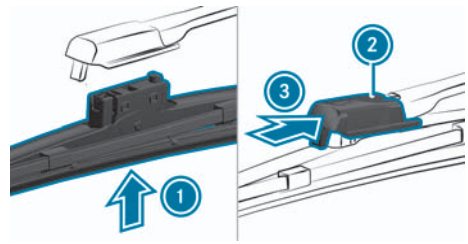

- Insert the new wiper blade into the wiper arm in the direction of arrow ①.
- Slide catch ② in the direction of arrow ③ until it engages in the locking position.
- Make sure that the wiper blade is seated correctly.
- Attach the hose to the pipe jet.
- Fold the wiper arms back onto the windscreen.

Checking the engine oil and topping up

Checking the oil level

- Check the engine oil level on the on-board computer (→ Page 169).
- Only use oils that are approved for the vehicle and meet the specified SAE classifications (→ Page 527).

Topping up the engine oil

Note

Damage caused by topping up too much engine oil

Excess engine oil can damage the engine or catalytic converter.

- Have excess engine oil removed at a qualified workshop.

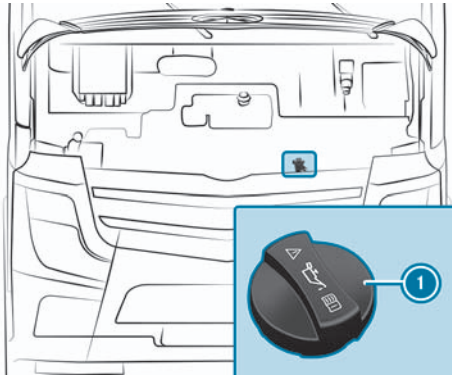

Only refill the oil filling capacity displayed on the instrument cluster when the symbol appears in the menu window.

- Park the vehicle on a level surface.
- Apply the parking brake.
- Switch off the vehicle.
- Open the maintenance flap (→ Page 428).
- Unscrew and remove the cap 1.
- Top up the oil filling capacity displayed on the instrument cluster.
- Put on the cap 1 and screw it closed.
- Close the maintenance flap.

Automatic transmission oil level

Checking oil level of the automatic transmission

Note

Risk of damage to the transmission due to excessive transmission oil temperature

If the indicator lamp flashes or lights up while the vehicle is in motion, the temperature of the transmission oil or the coolant is too high. This may be caused by the transmission oil level being too high or too low. If the transmission oil temperature is increased from time to time, there is a risk of damage to the transmission.

- Check the oil level of the automatic transmission as soon as possible after the indicator lamp flashes or lights up.

Check the oil level only when the automatic transmission is at normal operating temperature.

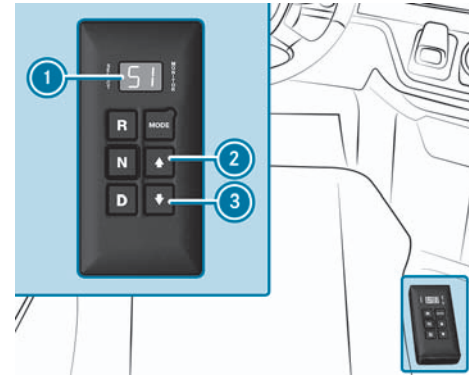

- Park the vehicle on a level surface.
- Apply the parking brake.
- Shift the automatic transmission to neutral position.
- Start the vehicle and leave it running at idle speed.
- Press the 2 and 3 buttons simultaneously.
- Press the button 2.
  - ◁ The oil level measurement will start. During oil level measurement, the display 1 will show the codes from oL 08 to oL 01 in sequence.

Automatic transmission oil level

- Wait for approximately two minutes.
  - ◁ After the waiting time, the display ① will automatically show a code for the oil level or a fault code.

Ending oil level measurement

- Press any gear button.
  - ◁ The oil level measurement is finished. The display ① once again shows the shift position on the left and the selected gear on the right.
- Top up the transmission oil if necessary.

Overview of transmission oil level fault codes

Codes for the oil level:

Code	Meaning
oL oK	The oil level in the transmission is OK.
oL Lo	The oil level in the transmission is too low.
	The subsequently displayed number indicates the transmission oil quantity that must be refilled, for example: **01** = 1 l
oL HI	The oil level in the transmission is too high.
	The subsequently displayed number indicates the transmission oil quantity that must be drained or extracted, for example: **01** = 1 l

Possible fault codes during oil level measurement:

Code	Meaning	Remedy
oL EL	The engine speed is too low.	Leave the engine running at idle speed.
oL EH	The engine speed is too high.	Leave the engine running at idle speed.
oL SN	The automatic transmission is not in the neutral position.	Shift the automatic transmission to neutral position.
oL TL	The oil temperature is too low.	Leave the engine running until the transmission oil reaches operating temperature.
oL TH	The oil temperature is too high.	Switch off the vehicle until the oil temperature in the transmission has dropped to operating temperature.
oL SH	The vehicle is rolling.	Stop the vehicle. Apply the parking brake.
oL FL	The sensor for the oil level is defective.	Check the oil level using the oil dipstick. Have the malfunction checked at a qualified specialist workshop.

Notes on the major assemblies

Note

Pollution of the environment due to irresponsible disposal of operating fluids

Incorrectly disposing of operating fluids can cause considerable damage to the environment.

- ► Dispose of operating fluids in an environmentally responsible manner.

Operating fluids include:

- Fuels
- Additives for exhaust gas after-treatment, e.g. AdBlue®
- Lubricants
- Coolant
- Air conditioning system refrigerants

Regularly check the major assemblies for leak tightness. If you notice loss of fluids, e.g. oil spots where the vehicle is parked, have the cause rectified immediately by a qualified specialist workshop.

Checking the anti-corrosion protection

Note

Damage to the anti-corrosion protection due to salt residue

Road salt is aggressive. Salt residue may damage the anti-corrosion protection.

- ► Wash the vehicle more frequently in winter to remove road salt residues.

The vehicle may be equipped with a chassis protection seal for Mercedes-Benz Trucks. The chassis protection seal for Mercedes-Benz Trucks is a transparent anti-corrosion protection wax with excellent protective properties.

All MercedesBenz Trucks cabs come treated with a cavity preservative.

- ► Regularly check the vehicle for corrosion damage, particularly the compressed-air and hydraulic lines and electrical contact points (earth contacts).
- ► Have any damage to the factory-fitted, anti-corrosion protection repaired at a qualified specialist workshop.
- ► Vehicles without chassis protection seal for Mercedes-Benz trucks: As a precaution, spray the underside of the vehicle with corrosion protection wax for underbodies according to the Mercedes-Benz Trucks Specifications for operating fluids (→ Page 527).

Battery

Notes on the battery

Danger

Danger of chemical burns from battery acid

Battery acid is caustic.

- ► Avoid contact with the skin, eyes, or clothing.
- ► Do not inhale battery gases.
- ► When carrying out maintenance work on the battery, wear acid-resistant protective clothing, par-

ticularly safety glasses, protective gloves, and aprons.

- Do not lean over a battery.
- Keep children away from the battery.
- In case of contact with battery acid, immediately rinse the affected area thoroughly with plenty of clear water and seek medical assistance promptly.
- If you get battery acid in your eyes, as soon as possible rinse them thoroughly with plenty of clean water. Seek medical attention as soon as possible.

Note

Damage to the on-board electrical system batteries caused by receiving current directly

Connecting consumers directly to the battery poles causes the battery sensors to make an incorrect determination. This causes uncontrolled battery discharge, and both on-board electrical system batteries may be discharged.

- Do not connect consumers directly to the battery terminals.

Note

Environmental damage due to improper disposal of batteries

Batteries contain pollutants. It is illegal to dispose of them with the household rubbish.

- Dispose of batteries in an environmentally responsible manner. Take discharged batteries to a qualified specialist workshop or to a collection point for used batteries.

Observe the safety instructions and protective measures when handling the battery:

	Risk of explosion. Explosive oxyhydrogen gas is produced when batteries are being charged. Only charge batteries in a well-ventilated area.
	Risk of explosion. Avoid creating sparks! Avoid fire, open flames, and do not smoke when handling the battery.
	Battery acid is caustic. Wear acid-resistant protective gloves! Splashes of acid on skin or clothing should be neutralised as soon as possible using soapy water or acid neutraliser and then rinsed with water.
	Wear eye protection. When mixing water and acid, the liquid may splash into your eyes. Rinse out any acid that splashes into eyes as soon as possible using clean water and seek medical attention without delay!
	Keep out of the reach of children. Children are not able to evaluate the risk involved in handling batteries and acid.
	Always observe the safety instructions, protective measures and procedures specified in these operating instructions when handling the on-board electrical system battery.

For safety reasons, Daimler Truck AG recommends that you only use batteries that have been approved for your vehicle by Daimler Truck AG.

Observe the following points regarding battery capacity and performance:

- Battery capacity is limited and the operating time depends on the number of electrical consumers that are switched on and the duration used.
- The given rated capacity of the battery may be higher than the actual battery capacity. The battery capacity depends on the following factors:
  - the age of the battery
  - the outside temperature
  - The engine speed
- Regardless of the power of the alternator, the battery can only be charged a certain amount per hour. The rate of charge is significantly reduced by low outside temperatures. As a result, it can take significantly longer to charge the battery in winter.
- If the battery is used intensively when the vehicle is stationary, e.g. when spending the night in the vehicle, the battery may need to be recharged after a few days.

  Example:

  If the refrigerator box consumes approximately 1 A per hour and remains switched on over a weekend, this results in an overall consumption of approximately 60 Ah.
- Ideally, recharge the batteries regularly with an external charger, at least once per month.
- To ensure the vehicle's starting ability, observe the notes and instructions in the following display messages:
  - Energy-saving mode active
  - Battery charge level too low Start engine.

If energy-saving mode is active, certain consumers, such as the cool box, are switched off (→ Page 559). As a result, perishable goods may no longer be sufficiently cooled.

Observe the following notes to minimise power consumption:

- Electric stationary air-conditioning system: The system is designed to keep an already cooled cab at the right temperature. The set specified temperature should be appropriate to the outside temperature.
- Devices such as coffee makers, microwave ovens and kettles have an extremely high electrical consumption for their usually brief length of time in use.
- Ideally, also charge mobile phones and notebooks whilst driving.
- If devices such as TVs, receivers or voltage converters are not being used, disconnect them from the on-board electrical system.

If you park up your vehicle for longer than three weeks, observe the notes on parking up the vehicle (→ Page 449).

When storing batteries, comply with all safety regulations, such as operating instructions, regulations concerning hazardous materials, environmental protection measures, as well as work safety and accident prevention regulations.

Observe the notes on care and maintenance of the battery (→ Page 445).

Removing and fitting batteries

Battery box

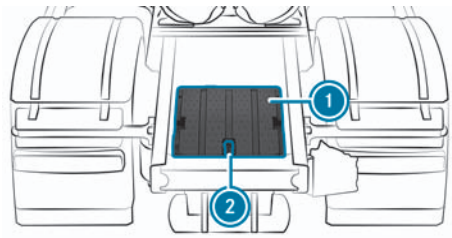

- **To remove:** Open catch (2) and remove battery box cover (1) upwards.
- **To fit:** Replace battery box cover (1), hook in catch (2) and close.

Arrangement of the batteries

The location of the batteries may vary depending on the vehicle version. The batteries may be fitted one beside the other or one on top of the other in the rear area between the longitudinal members of the chassis frame or on the side on the chassis.

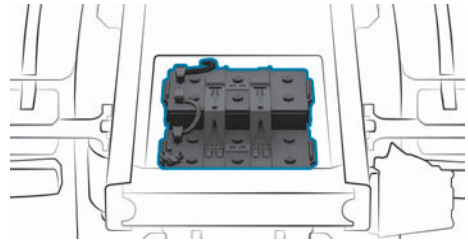

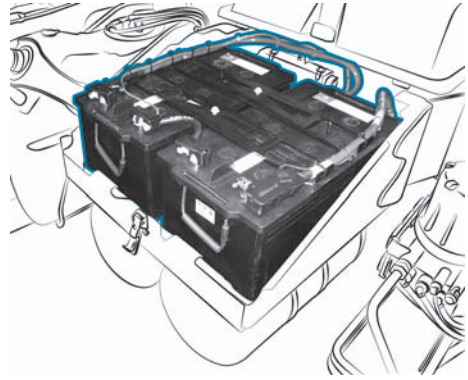

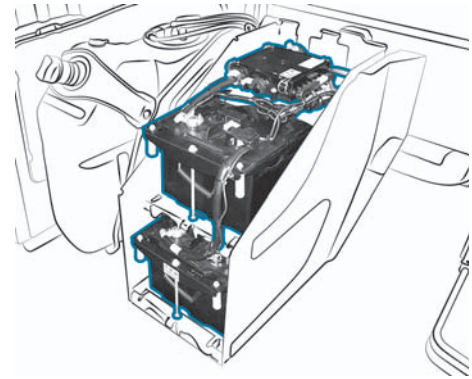

Disconnecting and reconnecting the batteries

Danger

Risk of explosion due to the ignition of hydrogen gas

If there is a short circuit or sparks are created, there is a danger of hydrogen gas igniting when you charge the battery.

- Ensure that the POSITIVE terminal of a connected battery does not come into contact with vehicle parts.

- Do not place metal objects or tools on a battery.
- When connecting and disconnecting the battery, always observe the sequence of battery terminals described.
- When jump starting, always take care to connect only battery terminals of identical polarity.
- During starting assistance, observe the sequence described for connecting and disconnecting the jump leads.
- Do not connect or disconnect the battery terminals with the engine running.

Note

Damage to the battery sensor due to a loose negative pole

For vehicles with a battery sensor, the negative terminal is part of the battery sensor. If the negative terminal is not correctly secured to the battery's negative pole, contact is not ensured. This may damage the battery sensor or battery pole.

- Tighten the negative terminal of the battery sensor with a tightening torque of 7 ±1 Nm.

Observe the safety instructions on handling batteries.

Before disconnecting and reconnecting the batteries:

- Semitrailer truck with batteries in the rear area: Uncouple the semitrailer (→ Page 376).
- Switch off the vehicle.
- Switch off all electrical consumers.
- Remove the battery box cover.
- **Disconnecting:** Disconnect the negative terminal first, and then disconnect the positive terminal.
- **Connecting:** Reconnect the positive terminal first, and then reconnect the negative terminal. Do not interchange the battery clamps.
- Replace battery box cover.

Carry out the following tasks after an interruption to the power supply or after reconnecting the batteries:

- Reset the side window (→ Page 64) and the sliding sunroof (→ Page 65).
- Set the local time in the tachograph.
- Set the switch-on time for the auxiliary heating system (→ Page 155).

Removing and fitting batteries (one above the other)

Note

Damage to the battery carrier due to excessively high tightening torque

If you tighten the screws of the battery carrier with excessively high tightening torque, the screw connections may be damaged.

- Tighten the screws of the battery carrier with a tightening torque of 12 Nm. Do not use an impact wrench.

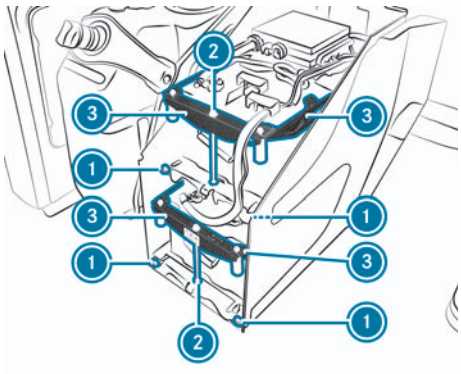

Removal

- Remove the battery box cover.
- Disconnect the negative terminal first, and then disconnect the positive terminal.
- Detach connecting cable between the batteries.
- Remove screws ① from the upper battery carrier.
- Pull out the upper battery carrier.
- Remove screw ② from the upper securing frame ③.
- Remove the securing frame ③.
- Pull out the upper battery and the upper battery carrier.
- Remove the screws ① from the lower battery carrier.
- Pull out the lower battery carrier.
- Remove screw ② from the lower securing frame ③.
- Remove the lower securing frame ③.
- Remove the lower battery and the lower battery carrier.

Installing

- Insert the lower battery carrier.
- Place the battery onto the lower battery carrier.
- Position the lower securing frame ③ and screw in screw ②.
- Push in the lower battery carrier.
- Screw screws ① into the lower battery carrier.
- Insert the upper battery carrier.
- Place the battery onto the upper battery carrier.
- Position the upper securing frame ③ and screw in screw ②.
- Push in the upper battery carrier.
- Screw screws ① into the upper battery carrier.
- Reconnect connecting cable between the batteries.
- Reconnect the positive terminal first, and then reconnect the negative terminal.
- Replace battery box cover.

Removing and installing batteries (one beside the other)

Note

Damage to the battery carrier due to excessively high tightening torque

If you tighten the screws of the battery carrier with excessively high tightening torque, the screw connections may be damaged.

- Tighten the screws of the battery carrier with a tightening torque of 20 Nm. Do not use an impact wrench.

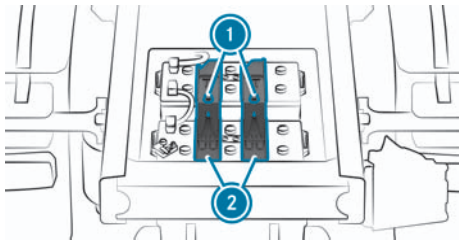

Removal

- Remove the battery box cover.
- Disconnect the negative terminal first, and then disconnect the positive terminal.
- Detach connecting cable between the batteries.
- Remove screws (1) from brackets (2).
- Remove both brackets (2).
- Remove the batteries.

Installing

- Insert the batteries.
- Insert both brackets (2).
- Screw screws (1) into brackets (2).
- Reconnect connecting cable between the batteries.
- Reconnect the positive terminal first, and then reconnect the negative terminal.
- Replace battery box cover.

Information on maintenance and care of the battery

Parking the vehicle for an extended time period/vehicle downtimes and storage

Note

Battery discharging due to quiescent current consumers

If the vehicle is idle for lengthy periods, the battery can be discharged by quiescent current consumers. This can damage the battery.

- For idle times of over a week, disconnect the negative terminal on the battery.

Note

Damage to the battery due to excessively low voltage

If the battery voltage falls below 12.1 V, the battery will be damaged and must be replaced.

- For idle times of over a month, remove the batteries.
- Dry the batteries and store them at temperatures between 0 °C and 30 °C.
- Keep the battery voltage constant at 12.6 V.

Charge the battery when the no-load voltage is less than 12.6°V. This ensures that the vehicle can always be started.

If you park up your vehicle for longer than three weeks, observe the notes on parking up the vehicle (→ Page 449).

When storing batteries, comply with all safety regulations, such as operating instructions, regulations concerning hazardous materials, environmental protection

measures, as well as work safety and accident prevention regulations.

Battery replacement and operating life

Note

Damage to the on-board electrical system batteries caused by receiving current directly

Connecting consumers directly to the battery poles causes the battery sensors to make an incorrect determination. This causes uncontrolled battery discharge, and both on-board electrical system batteries may be discharged.

- ► Do not connect consumers directly to the battery terminals.

Avoid the battery becoming fully discharged. This can significantly reduce the operating life of the battery.

Long battery service life can be achieved by keeping the batteries adequately charged.

Daimler Truck AG recommends the following when replacing the batteries:

- Always replace both batteries.
- Use the same type of battery.
  If you use another type of battery, have the battery type set with a diagnostic device by a qualified workshop.
- Use batteries of the same age.
  Do not combine old and new batteries.

If the vehicle is equipped with an AGM battery (fleece battery), observe the following notes:

- The batteries are maintenance-free.
- They do not need topping up with distilled water.

Battery care

Note

Battery discharge due to leakage currents

Dirty battery terminals and battery surfaces cause leakage currents. This can lead to the battery discharging.

- ► Keep the battery terminals and battery surfaces clean and dry.

Note

Damage to the battery housing due to improper cleaning

If you use cleaning agents that contain fuel, they will attack the battery housing.

- ► Do not use cleaning agents that contain fuel.

Note

Damage to the battery due to self-discharge

If dirt penetrates the battery cell, the self-discharge rate of the battery is increased and the battery can be damaged.

- ► Only clean the battery with the cell caps screwed in.

Observe the following points on battery care:

- Lightly grease the undersides of the battery terminals with acid-resistant grease.
- Only use commercially-available cleaning agents to clean the battery housing.

Activating transport mode

Activate/deactivate

Transport mode includes a deactivation function for various electrical consumers when the vehicle is switched off, which protects the batteries from discharging when vehicles are parked up for longer periods of time.

In transport mode, all functions which are also deactivated in energy-saving mode are deactivated.

Additionally, the following functions are deactivated in transport mode:

- the work lamps
- the cargo liftgate
- charging management for the alternator
- the dipped beam (when the vehicle has not been started)
- the vehicle (after 15 minutes if no diagnostic device is connected)

► Press the hazard warning lights switch, the headlamp flasher, and turn signal indicator simultaneously for at least three seconds within three seconds of switching the vehicle on.

► **To activate:** Move the turn signal indicator down.

► **To deactivate:** Move the turn signal indicator up.

Active transport mode will be shown as a display message when the vehicle is switched on again.

Note

The use of transport mode is stored in the vehicle along with the kilometre reading and the time of activation/deactivation.

Checking and charging the battery

Checking the battery charge level

If the vehicle is used predominantly for driving short distances or is parked up for a longer period of time, check the battery charge level more often.

► Disconnect the batteries.

► Measure the no-load voltage of the battery.

► If the no-load voltage of the battery is over 12.6 V, reconnect the battery.

► If the no-load voltage of the battery is under 12.6 V, charge the battery separately.

Note

You can have the battery charge level displayed in the [ ] Battery status menu of the instrument cluster (→ Page 169).

Charging the battery

Danger

Risk of explosion when the battery is frozen

A discharged battery can freeze at temperatures near the freezing point.

If you then provide starting assistance or charge the battery, battery gas may escape.

- Always thaw a frozen battery before charging it or providing starting assistance.

If the warning and indicator lamps do not light up in the instrument cluster at temperatures around or below freezing, it is highly probable that the discharged battery has frozen. In this case, do not jump start or charge the battery.

The service life of a battery that has been thawed may be dramatically shortened.

The starting characteristics may be impaired, especially at low temperatures.

Have a thawed battery checked at a qualified workshop.

Use a commercially available charger to charge the battery. Make sure that the charging voltage is correct. Do not charge new batteries with rapid charging. With used batteries, the charging current with rapid charging must not exceed 75% of the battery capacity. Otherwise, the battery will be damaged.

For new batteries, the charging current must not exceed 10 % of the battery capacity. A higher charging current can damage the battery.

Charge the batteries at an ambient temperature over 0°C. The optimum ambient temperature is between 10 °C and 25 °C.

- Remove the batteries.
- Unscrew the battery cell caps.
- Check the battery fluid level.
- Charge the batteries separately.
- Connect and switch on the charger. See the charger's operating instructions.
- When the batteries are charged: Switch off the charger and screw the cell caps onto the batteries.
- Fit the batteries.

Note

After charging/replacing the batteries, the battery charge level calculated may not be correct. It takes approximately three days while the vehicle is in operation for the teach-in process to be completed. The following display messages are only correct once the teach-in process has been completed:

Energy-saving mode active

Battery charge level too low Start engine.

Checking the battery fluid level

Tap water reduces the electrical power of the batteries. Only top up with distilled or de-ionised water.

Do not use a metal funnel when topping up. The metal funnel could cause a short circuit and the batteries may be damaged.

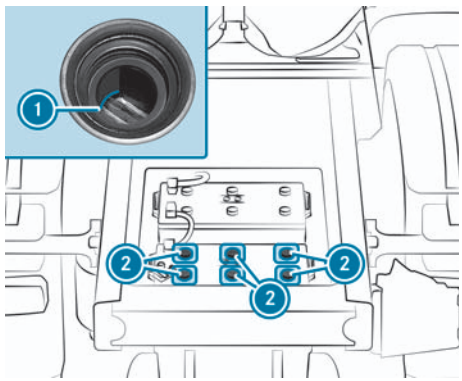

Batteries in the chassis, one beside the other (example: semitrailer truck)

Observe the safety instructions on handling batteries.

- ► Check the battery fluid level regularly, as required by the vehicle operating conditions, and at least once a year.
- ► Remove the battery box cover.
- ► Vehicles with batteries fitted one above the other: Remove the batteries.
- ► Unscrew the cell caps ②.
- ► Check the battery fluid level. The battery fluid must reach marker bar ① in each battery cell.
- ► Top up with distilled/de-ionised water.
- ► Refit the cell caps ②.
- ► Vehicles with batteries fitted one above the other: Fit the batteries.
- ► Replace battery box cover.

Notes on parking up the vehicle

When parking up the vehicle, special measures according to the Mercedes-Benz Trucks Specifications for Operating Fluids need to be taken.

You can obtain further information in the notes on operating fluids (→ Page 527) or from an authorised Mercedes-Benz Trucks Service Centre.

Function of telediagnostics

The Mercedes-Benz Trucks Service 24h responder can call up detailed technical information on your vehicle using telediagnostics. This allows Mercedes-Benz Trucks Service 24h to identify the malfunction and quickly provide you with assistance.

Telediagnostics is possible if you use an activated Truck Data Center in conjunction with the Uptime Fleetboard service or have a Mercedes-Benz Uptime service contract.

The following data is transmitted to Mercedes-Benz Trucks Service 24h:

- Data necessary for vehicle identification (e.g. vehicle identification number/VIN)
- Control unit diagnostic data (e.g. fault memory)
- current vehicle location data
- current total distance

No data related to the driver, the route, or the load are transmitted.

Note

If you perform telediagnostics and do not notify Mercedes-Benz Trucks Service 24h, the data will be deleted after 72 hours.

Vehicle tool kits

Opening/closing the tool kit compartment

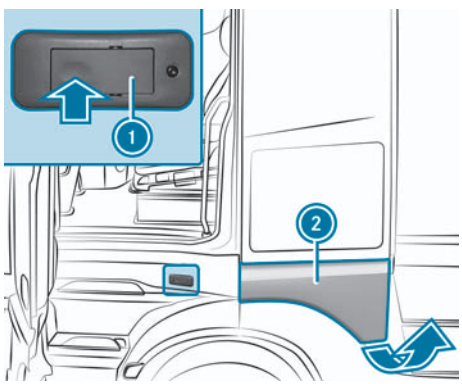

The tool kit compartment is at the side of the cab above the wheel arch and only accessible from the outside.

Opening the tool kit compartment

- ▶ Press the release catch (1) on the outside in the recess.
  - ◁ The outside flap (2) opens until stopped by the safety hook.
- ▶ Press the release catch (1) again on the outside in the recess.
  - ◁ The outside flap (2) is fully unlocked. The tool kit compartment lighting comes on automatically.
- ▶ Swing the outside flap (2) up fully using the handle recess on the right.
  - ◁ The prop engages.

Closing the tool kit compartment

- ▶ Raise the outside flap (2) a little using the handle recess on the right.
- ▶ Push the prop upwards.
- ▶ Swing the outside flap (2) down using the handle recess on the right until you hear it engage in the lock.
  - ◁ The tool kit compartment lighting goes out automatically.

Overview of vehicle tool kits and emergency equipment

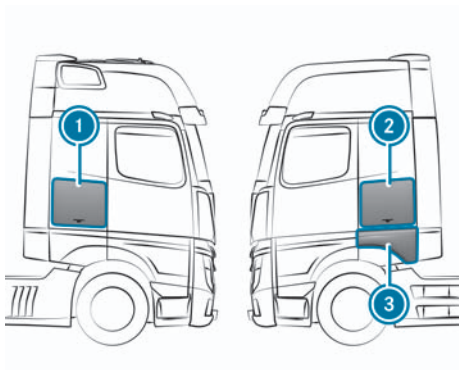

Stowage compartments and tool compartment in L cab

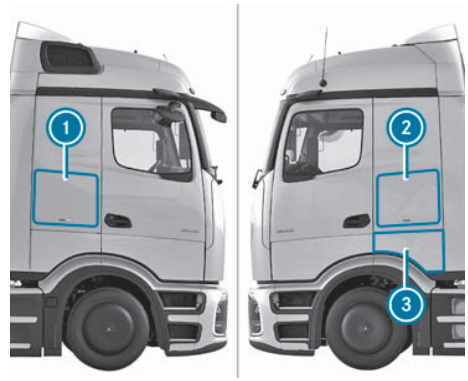

Stowage compartments and tool compartment in ProCabin cab

The vehicle tool kit and emergency equipment are divided into two packages:

Vehicle tool kit and emergency equipment

A	B
• Spare bulbs • Fire extinguisher • Tyre pressure gauge • Tyre inflator hose • Support block • Second warning triangle	• Towing eye • Spare wheel spacer • Vehicle tool kit • Hand crank • Lamp with 10 m cable • Assembly lever

A	B
	• Pump lever • Jack

Distribution of the vehicle tool kit and emergency equipment for L cabs and M cabs

Cab	Compartment 1	Compartment 2	Compartment 3
L cab with tool kit compartment	B		A
L cab with tool kit compartment and SoloStar Concept		B	A
L cab without tool kit compartment and with SoloStar Concept		A/B	
L cab without tool kit compartment	A/B		
M-cab	A	B	
ProCabin cab	A	B	

Vehicles with ADR classification: The fire extinguisher is located in the stowage compartment 2 on the driver's

side. Open stowage compartment (→ Page 140).

Vehicles with ADR classification and ProCabin: The fire extinguisher is located in the stowage compartment ③ on the driver's side. Open stowage compartment (→ Page 140).

In vehicles with two fire extinguishers, the second fire extinguisher may be in the following storage locations, depending on the vehicle version:

- in the stowage compartment ① on the front passenger's side
- in the tool kit compartment ③ (→ Page 450).
- in a protective box on the exterior of the rear panel on the driver's side

In the L cab as car transporter with lowered bunk or seat/bunk combination, the fire extinguisher and jack are behind the driver's seat. You are responsible for stowing the tools yourself.

In the S cab, the jack is on the B-pillar behind the passenger, and the vehicle tool kit is behind the driver's seat. For all vehicles except those on the French market, the fire extinguisher is on the engine tunnel on the rear panel. For vehicles on the French market, the fire extinguisher is on the A pillar on the passenger side. You are responsible for stowing the tools yourself.

The following emergency equipment is in the stowage space in the driver's door:

- First-aid kit
- Warning triangle
- Warning beacon
- High visibility vest

Using the jack, pump lever and chock

Jack

Note

Depending on the vehicle's equipment, the jack has a maximum weight of 15.9 kg.

The maximum load capacity of the jack can be found on the sticker affixed to the jack.

In the event of a fault, please contact a qualified specialist workshop.

Maintaining the jack

- **After use:** Clean all moving parts and grease them again.
- **Every six months:** Fully extend and retract the reciprocating piston.

Pump lever (two-part)

Danger

Risk of injury due to incorrect assembly of pump lever

During pumping, the lever can slide out of the guide.

- Make sure that the safety pin of the pump lever is engaged in the specified bore.

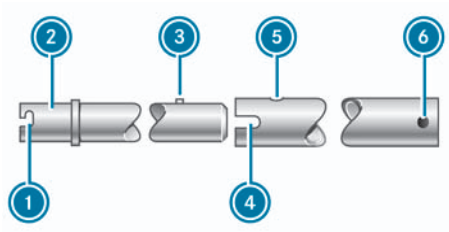

Pump lever

1. Recess (jack)
2. Jacking point (wheel spanner/cab tilting pump)
3. Locking pin
4. Recess (for operating the spare wheel winch and jack)
5. Hole for locking pin
6. Clamping sleeve for inserting the hand crank (spare wheel winch)

Use the pump lever to operate the following devices:

- Jack
- Wheel spanner
- Spare wheel winch
- Cab tilting pump

- **To assemble the pump lever:** Align and insert locking pin 3 into hole 5 of both pump lever parts.
  - ◁ Locking pin 3 will engage in hole 5.
- **To disassemble the pump lever:** Push locking pin 3 and pull apart the pump lever.

Removing the chock

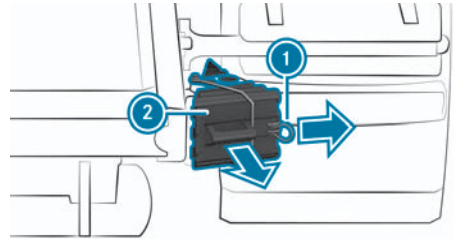

The storage location of the chocks may vary depending on the vehicle version and equipment.

- Pull the elastic strap over retainer 1.
- Press retainer 1 in the direction of the arrow and hold it there.
- Pull out wheel chock 2.
- Release retainer 1.

Inserting the chock

- Press retainer 1 in the direction of the arrow and hold it there.
- Insert wheel chock 2 into the bracket.
- Release retainer 1.
- Pull the elastic strap over and beyond retainer 1 and onto wheel chock 2.

Cab

Tilting the cab

Before tilting the cab

Danger

Risk of injury when tilting the cab

The cab may abruptly fall into the end position.

There is a risk of injury to persons in the area where the cab is tilted!

- Only tilt the cab if there is nobody in the tilting area.
- Do not go under the cab area when the cab is being tilted.

Danger

Risk of injury due to moving parts

Components in the engine compartment can continue to run or start unexpectedly even when the vehicle is switched off.

Observe the following before working in the engine compartment:

- Switch off the vehicle.
- Never touch the danger zones surrounding moving component parts, e.g. the rotation area of the fan.
- Remove jewellery and watches.
- Keep items of clothing and hair away from moving parts.

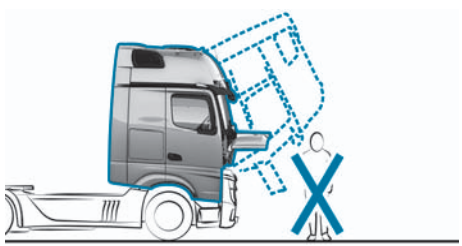

Perform the following before tilting:

- For safety reasons, keep the area in front of the cab clear.
- Apply the parking brake.
- Shift the transmission to neutral.
- For air-sprung cabs: allow the engine to continue running until the compressed-air system is filled to the maximum and the compressor switches off.
- Switch off the vehicle.
- When starting the vehicle after tipping, switch on the vehicle but do not start it.
- Switch off the auxiliary heating (→ Page 153).
- Switch off the stationary air conditioning system (→ Page 156).
- Switch off the refrigerator box (→ Page 140).

Note

Comply with the separate operating instructions for the refrigerator box. Do not switch the refrigerator box on again for ten minutes after tilting back the cab.

- Remove loose objects from the cab.
- Close the interior stowage compartments and the exterior tool kit compartment (→ Page 140).
- Close the doors.

Note

If you need to open a door when the cab is tilted, do so carefully and slowly until the door is fully open.

- Make sure the coupling pin of the front coupling jaw is secure and that the coupling jaw is covered (→ Page 494).
- Use chocks to protect the vehicle against rolling away.

Vehicles with ERA -GLONASS: If the system is active when the cab is tilted, an automatic emergency call may result.

Prior to tilting, activate the ERA-GLONASS system's service mode. Information about activating the service mode can be found in the "ERA-GLONASS supplementary instructions".

Tilting the cab forwards (mechanical-hydraulic cab tilt system)

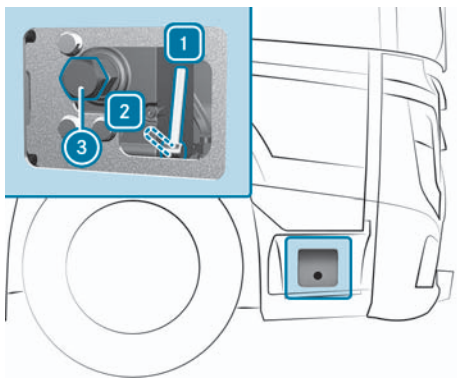

Cab tilt pump, L cab

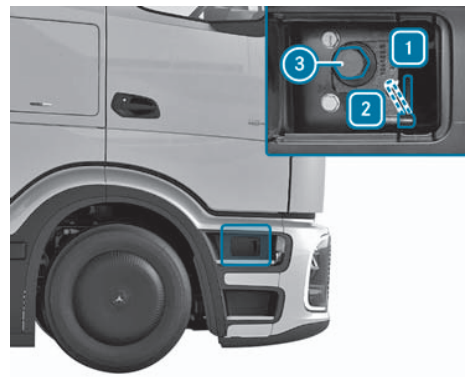

Cab tilt pump, ProCabin

Mechanical-hydraulic cab tilt pump

1 Drive position

2 Tilting position

3 Hexagon nut

Do not step on the engine when the cab is tilted.

- Read the notes before tilting the cab.
- Open the maintenance flap (→ Page 428).
- **Vehicles with L cab:** Swivel the flap on the right-hand side of the entrance upwards.
- **Vehicles with ProCabin:** Swivel the flap on the right-hand side of the entrance to the rear.
- Swivel the valve lever on the tilting pump to the 2 tilting position.
- Fit the pump lever to the hexagon nut 3 on the tilting pump using the wheel spanner (vehicle tool kit).
- Move the pump lever up and down on the tilting pump until the cab tilts to the forward end position.
  - ◁ The cab will be unlocked automatically.
- If there is noticeable resistance when you operate the pump lever, check that the tilting position 2 has been set correctly on valve lever on the tilting pump.
- If there is no noticeable resistance when you operate the pump lever, have the tilting hydraulics checked at a qualified specialist workshop.

Tilting the cab back into the drive position (mechanical-hydraulic cab tilt system)

Danger

Risk of accident and injury if the cab is not locked while the vehicle is in motion

When the vehicle decelerates, the following risks, in particular, may arise:

- The cab may tilt forward.
- You may lose control of the vehicle.
- Persons in the cab could be thrown forwards.
- Persons or objects in the range of movement could be hit.

Ensure the following before every journey:

- ► The cab is locked.
- ► The cab is engaged in the drive position and the valve lever is in the drive position.
- ► The indicator lamp goes out when the vehicle is started.

- ► Swivel the valve lever on the tilting pump to the drive position 1.
- ► Fit the pump lever to the hexagon nut 3 on the tilting pump using the wheel spanner.
- ► Move the pump lever up and down on the tilting pump until the cab is tilted back into the rear end position.
  - ◁ The catch will engage audibly and the cab will lock automatically.
- ► Close the maintenance flap.
- ► Close the flap on the right-hand side of the entrance and engage audibly.
- ► Check whether the indicator lamp on the instrument cluster goes off after you start the vehicle.
- ► If the indicator lamp does not go out, repeat the process and tilt the cab back again.

Tilting the cab forwards (electro-hydraulic cab tilt system)

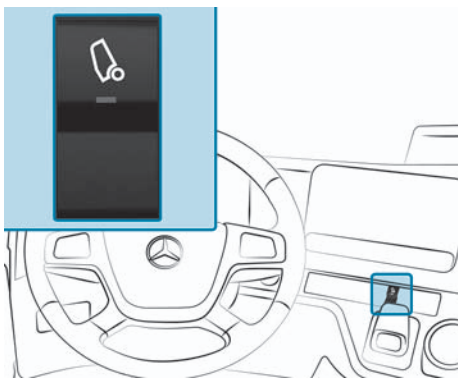

- ► Read the notes before tilting the cab.
- ► Open the maintenance flap (→ Page 428).
- ► Press the button .
  - ◁ The indicator lamp on the button lights up. The cab tilting pump will be switched on.

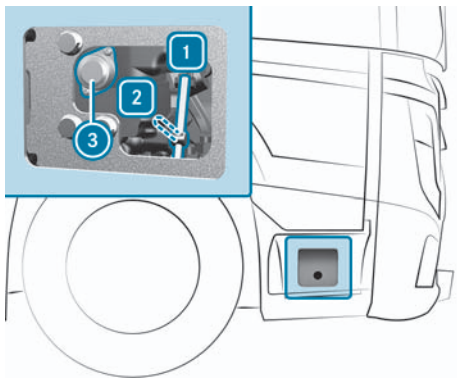

Cab tilt pump, L cab

Cab tilt pump, ProCabin

Electro-hydraulic cab tilting pump

1 Valve lever in drive position

2 Valve lever in tilting position

3 Button

Do not step on the engine when the cab is tilted.

- **Vehicles with L cab:** Swivel the flap on the right-hand side of the entrance upwards.
- **Vehicles with ProCabin:** Swivel the flap on the right-hand side of the entrance to the rear.
- Check the direction of rotation of the valve lever on the instruction sticker in the entrance.
- Swivel the valve lever on the cab tilting pump into the tilting position 2.
- Press and hold the 3 button until the cab has tilted into the forward end position.
  - ◁ The cab has reached the front end position once the noise of the pump becomes louder.

Tilting the cab back into the drive position (electro-hydraulic cab tilt system)

Danger

Risk of accident and injury if the cab is not locked while the vehicle is in motion

When the vehicle decelerates, the following risks, in particular, may arise:

- The cab may tilt forward.
- You may lose control of the vehicle.

- Persons in the cab could be thrown forwards.
- Persons or objects in the range of movement could be hit.

Ensure the following before every journey:

- ► The cab is locked.
- ► The cab is engaged in the drive position and the valve lever is in the drive position.
- ► The indicator lamp goes out when the vehicle is started.

► Swivel the valve lever on the cab tilting pump into the drive position [1].

► Press and hold the ③ button until the cab is tilted back into the rear end position.

◁ The cab will lock automatically.

► Close the flap on the right-hand side of the entrance and engage audibly.

► In the cab, press the lower section of the [ ] button.

◁ The indicator lamp on the button [ ] will go out.

► Check whether the indicator lamp [ ] on the instrument cluster goes out after you start the vehicle.

► If the [ ] indicator lamp does not go off, repeat the process and tilt the cab back again.

Problems when tilting the cab

Mechanical-hydraulic cab tilt system

The cab cannot be tilted.

Possible causes:

- The valve lever of the mechanical-hydraulic cab tilting pump is in the "Drive position" valve lever position.
- The tilting hydraulics are leaking or have failed.

► Turn the valve lever on the mechanical-hydraulic cab tilting pump to the "Tilting" valve lever position (→ Page 453).

► Have the tilting hydraulics repaired at a qualified specialist workshop.

Electro-hydraulic cab tilt system

The cab cannot be tilted.

Possible causes:

- The cab tilt system is not switched on.
- The fuse for the cab tilting pump has blown.
- The tilting hydraulics are leaking or have failed.

► Press button [ ] (→ Page 453).

◁ The indicator lamp on the button [ ] will light up.

► Replace the fuse for the cab tilting pump in module A1 on the main fuse carrier (→ Page 481).

► Have the tilting hydraulics repaired at a qualified specialist workshop.

Engine

Starting or switching off the vehicle with the cab tilted

Danger

Risk of injury due to moving parts

Components in the engine compartment can continue to run or start unexpectedly even when the vehicle is switched off.

Observe the following before working in the engine compartment:

- Switch off the vehicle.
- Never touch the danger zones surrounding moving component parts, e.g. the rotation area of the fan.
- Remove jewellery and watches.
- Keep items of clothing and hair away from moving parts.

Danger

Risk of burns from hot components in the engine compartment

Certain parts of the engine compartment may be very hot.

- Allow the engine to cool down and only touch the components described in the following.

When working on public roads, observe the road and traffic conditions and secure the area where the vehicle is parked.

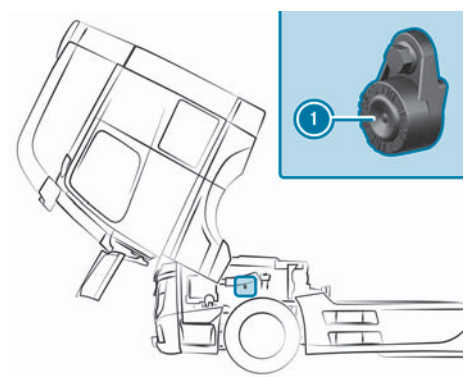

- Tilt the cab forward (→ Page 453).

Start the vehicle

- Press the external engine start/stop button (1) until the vehicle starts.

Starting the vehicle and increasing the engine speed

- Keep the external engine start/stop (1) pressed until the vehicle starts and the desired engine speed has been reached.
  - ◁ After approximately three seconds, the engine speed increases. After external engine start/stop (1) has been released, the engine will continue to run at the speed currently set.

The engine speed can be increased up to the limiting speed.

Switching off the vehicle

- Press the external engine start/stop (1) again.
- Tilt the cab back into the drive position.

Draining and bleeding the fuel system

Danger

Risk of explosion due to an explosive mixture of gas

An explosive mixture of gas may escape from the battery during the charging process and when providing starting assistance.

- Avoid fire, naked flames, sparks, and smoking.
- Ensure sufficient ventilation.
- Do not lean over a battery.

Note

Damage to the starter due to an excessive number of starting procedures

If you overload the starter with too many starting procedures, it may be damaged.

- Do not bleed the fuel system with multiple starting procedures.

Bleeding the fuel system without the fuel prefilter (OM 460)

- Apply the parking brake.
- Switch on the vehicle.
- Shift the transmission to neutral.
- Tilt the cab forward (→ Page 453).
- Unscrew the fuel tank fuel filler cap.

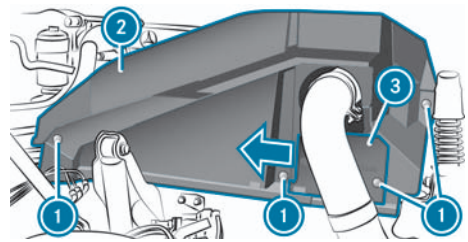

- Unscrew the fasteners (1).
- Slide the cap (3) to one side and remove the cover (2).

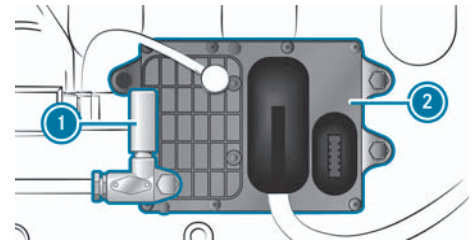

If fuel pressure has been established at the main filter with the hand pump (1), the vehicle must be started within about five seconds. Otherwise the fuel pressure drops and the process must be repeated.

- Keep pressing the hand pump (1) on the control unit (2) (about 100 times) until the overflow valve audibly opens.
- Within about five seconds, press the external engine start/stop (→ Page 459) and start the vehicle.
- If the vehicle starts up: Leave the engine running at a higher engine speed.
- If the vehicle does not start: Repeat the procedure.
- Fit the cover.

- Tilt the cab back into the drive position (→ Page 453).
- Screw on the fuel tank fuel filler cap.

Bleeding the fuel system without fuel prefilter (OM 470/471/473)

- Apply the parking brake.
- Switch on the vehicle.
- Shift the transmission to neutral.
- Tilt the cab forward (→ Page 453).
- Unscrew the fuel tank fuel filler cap.

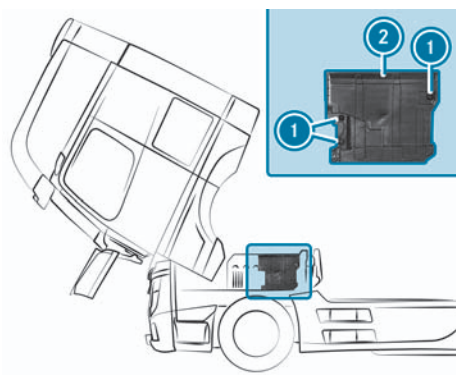

- Unscrew screws 1.
- Remove the cover 2.

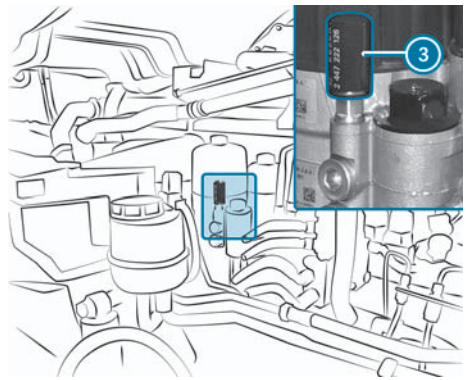

If fuel pressure has been established at the main filter with the hand pump 3, the vehicle must be started within about five seconds. Otherwise the fuel pressure drops and the process must be repeated.

- Press the handle of the hand pump 3 on the main filter until a noticeable resistance can be felt.
- Within about five seconds, press the external engine start/stop (→ Page 459) and start the vehicle.
- If the vehicle starts up: Leave the engine running at a higher engine speed.
- If the vehicle does not start: Repeat the procedure.
- Fit the cover 2.
- Tilt the cab back into the drive position (→ Page 453).
- Screw on the fuel tank fuel filler cap.

Bleeding the fuel system without the fuel prefilter (OM 936)

- Start the vehicle but do not depress the accelerator pedal while doing so.

Note
The starting procedure will be automatically interrupted after about 60 seconds.

- If the vehicle starts, depress the accelerator pedal several times.
  - ◁ The fuel system bleeds completely.
- If the vehicle does not start, repeat the procedure.

Bleeding the fuel system with the fuel prefilter

Note

Environmental pollution due to disposal in an environmentally irresponsible manner

To prevent damage:

- Dispose of the water/fuel mixture in an environmentally responsible manner.

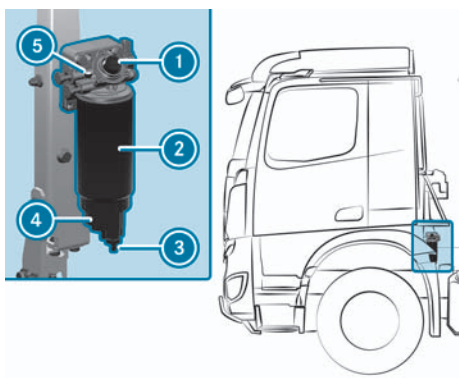

Fuel prefilter (example)

Draining the fuel prefilter (with hand pump)

If water has separated in the inspection glass (4), drain the fuel prefilter (2) before bleeding.

Regularly drain the fuel prefilter (2).

- Place a collecting pan under the drain screw (3).
- Unscrew the drain screw (3).
- Operate hand pump (1) and collect the water/fuel mixture.
- Close the drain screw (3).

Bleeding the fuel prefilter (with hand pump)

- Unscrew the fuel tank fuel filler cap.
- Place a collecting pan underneath the fuel prefilter (2).
- Unscrew the bleed screw (5).
- Press the hand pump (1) repeatedly until the fuel comes out free of bubbles at the bleed screw (5).
- Tighten the bleed screw (5).

Note

If there was no fuel in the fuel tank, press the hand pump (1) again until a noticeable resistance can be felt.

For vehicles with the OM 460/470/471/473 engine, also bleed using the hand pump on the main filter.

- Screw on the fuel tank fuel filler cap.
- Start the vehicle but do not depress the accelerator pedal while doing so.

Note

The starting procedure is automatically interrupted for the following vehicles:

OM 936 engine after about 60 seconds

OM 470/471/473 engines after about 40 seconds

- For vehicles with the OM 460 engine, the starting procedure must be interrupted after 20 seconds and, if necessary, repeated after approximately one minute. After three starting pro-

cedures, take a break of about three minutes.

- ► If the vehicle starts, depress the accelerator pedal several times.
  - ◁ The fuel system bleeds completely.
- ► Vehicles with OM°936: If the vehicle does not start, repeat the procedure.

Draining the fuel filter using the water separator on the engine (OM 470/471/473)

Danger

Risk of fire or explosion from fuel

Fuels are highly flammable.

- ► Fire, naked flames, smoking and a formation of sparks must be avoided.
- ► Switch off the vehicle and the stationary heater before working on the fuel system.
- ► Always wear protective gloves.

Note

Engine damage due to delayed drainage of the fuel filter

If the amount of water in the fuel is too high, it can lead to engine damage. When the water separator is full, the instrument cluster shows a corresponding display message.

- ► Drain the fuel filter immediately.

Note

Environmental pollution due to disposal in an environmentally irresponsible manner

To prevent damage:

- ► Dispose of the water/fuel mixture in an environmentally responsible manner.

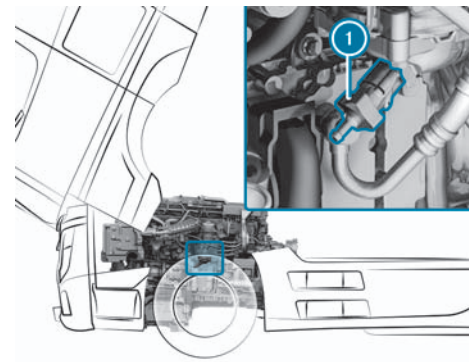

Note

Have this maintenance work carried out at a qualified workshop.

- ► Park the vehicle in a safe location and secure it against rolling away.
- ► Switch off the auxiliary heating.
- ► Switch off the vehicle.
- ► Tilt the cab forward (→ Page 453).
- ► Unscrew the fuel tank fuel filler cap.
- ► Place a suitable collecting pan under the drain screw (1).

- Open drain screw (1) until the water/fuel mixture flows out of drain hose.
- Drain off the water/fuel mixture until pure fuel appears (approx. 0.5 litre).
- Close the drain screw (1).
- Before starting the vehicle, bleed the fuel system.
- Screw on the fuel tank fuel filler cap.
- Dispose of the collected water/fuel mixture in an environmentally friendly manner, e.g. at a qualified specialist workshop.

Locking the air regulation system

The air regulation system controls the air supply to the radiator. When the fins are open, a lot of air flows through the radiator and the coolant is cooled to the maximum. When the fins are closed, less of air flows through the radiator and the coolant heats up faster.

If the air regulation system is malfunctioning and this is not due to foreign bodies/dirt, you will have to manually open and lock the affected air regulation system.

Open the upper and lower air regulation system and lock them before continuing to drive. Have the air regulation system repaired at a qualified specialist workshop as quickly as possible.

Upper air regulation system

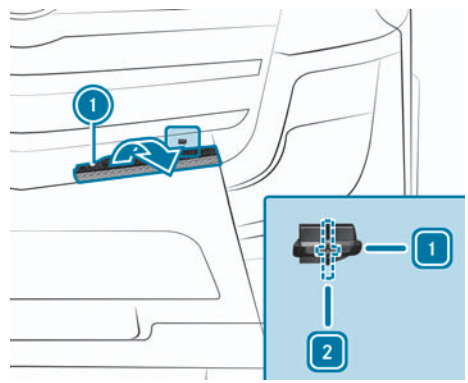

Actros example illustration

Upper air regulation system

(1) Step

[1] Unlocked

[2] Locked

- **Opening and locking:** Stop the vehicle and apply the parking brake.
- Switch off the vehicle.
- Fold the step (1) next to the left-hand headlamp down.
- To open the fins of the upper air regulation system, carefully fold one of the middle fins down.
- Turn the lock of the upper air regulation system clockwise to position [2].

Lower air regulation system

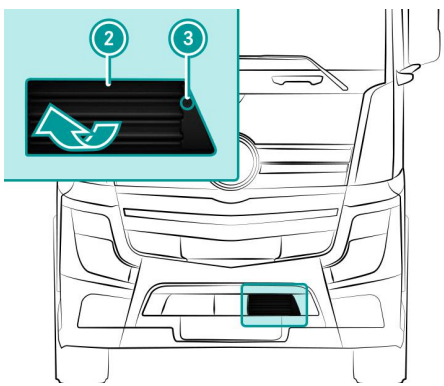

- **Opening and locking:** To open the fins (2) of the lower air regulation system, carefully fold one of the middle fins up.

- Turn the locking screw ③ using the torx key (vehicle tool kit) by approximately ¼ turn. The locking lever is unscrewed and locks the lower air regulation system.

Note
Turn the locking screw ¼ turn on both sides of the lower air regulation system.

Rectifying problems starting the engine

The vehicle will not start at low outside temperatures.

Possible cause:
- The flow characteristics of the diesel fuel are insufficient due to paraffin separation.

- Warm the entire fuel system, e.g. by parking the vehicle in a heated area.
- If the problem persists, have the cause rectified at a qualified specialist workshop.

The vehicle does not start.

Possible causes:
- The cargo liftgate is switched on. A grey display message appears on the instrument cluster with the symbols [ ] and Starter inhibitor active.
- There is a malfunction in the engine electronics.
- The vehicle was parked in gear, e.g. the supply pressure in the transmission/clutch circuit was exhausted by operating the battery disconnect switch. For safety reasons, starting the vehicle is prevented when a gear is engaged.

- Switch off the cargo liftgate, see the separate operating instructions.
- Switch off the vehicle before the next starting attempt.
- Fill up the compressed-air system using an external source of compressed air.
  - ◁ The transmission control can reopen the coupling and shift the transmission into neutral position.
- Repeat the starting attempt.

Flat tyre

Preparing for a wheel change

Danger
Risk of injury through incorrect positioning of the jack
If you do not position the jack correctly at the appropriate jacking point of the vehicle, the jack could tip with the vehicle raised.

- Only position the jack at the appropriate jacking point on the vehicle. The base of the jack must be positioned vertically under the jacking point of the vehicle.

Danger

Risk of injury due to the vehicle tipping over

On uphill and downhill slopes, the jack may tip over with the vehicle raised.

- Never change wheels on uphill or downhill slopes.
- Consult a qualified specialist workshop.

Danger

Risk of injury due to the jack tipping over

If you park a vehicle with air suspension, the air suspension can remain active for up to an hour, even if the vehicle is switched off. If you then raise the vehicle using the jack, the air suspension will attempt to even out the vehicle level.

The jack can tip over.

- Switch the vehicle off before raising the vehicle.

Danger

Risk of injury due to the use of a mount when changing a wheel

If, when changing the outer wheel on twin tyres, you use a mount for driving with the inner wheel, the inner wheel will be under load. It will then not be possible to correctly press and tighten the wheel against its contact surface.

As a result, you can lose a wheel while driving.

- Always use the jack when changing a wheel.

Danger

Risk of accident due to losing a wheel

Oiled, greased, or damaged wheel nut or wheel bolt threads and conical spring washers can cause the wheel nuts to come loose.

- Never oil or grease the threads or conical spring washers.
- If a thread or conical spring washer is damaged, consult a qualified specialist workshop as soon as possible.
- Have damaged wheel nuts, wheel bolts and conical spring washers replaced.
- Do not continue driving.

Danger

Risk of injury when loosening a wheel

If you loosen a wheel which sits on the wheel bolts under tension, it may drop down or tip over.

- Only remove the last three wheel nuts after making sure that the wheel sits on the wheel bolts without tension.

Note

Damage to the chassis caused by raising the vehicle incorrectly

For vehicles with a loading crane or cargo liftgate, do not raise the vehicle with the hydraulic support device. Otherwise, the chassis could be damaged.

- Use the jack to raise the vehicle.

Observe the following when changing a wheel on the vehicle:

- Only use wheel nuts that are approved for the vehicle.
- The wheel nuts for steel and light-alloy wheels are different.
- The wheel nuts for light-alloy wheels on the front and rear axles are different.
- Wheels with a tyre pressure sensor are furnished with a red ring.

Observe the following notes when raising the vehicle:

- Make sure that the maximum load capacity for the jack is not exceeded. The maximum load capacity of the jack is stated on the adhesive label affixed to the jack.
- The jack is designed only to raise the vehicle for a short time, e.g. while a wheel is being changed. It is not suitable for raising the vehicle in order to perform work under the vehicle.
- Only position the jack at the appropriate jacking point on the vehicle. Make sure that the jack is correctly positioned on the jacking point before raising the vehicle.
- The jack support point may differ on special bodies. Observe the body manufacturer's operating instructions.
- Secure the vehicle before raising it to prevent it from rolling away, for example, by applying the parking brake and/or using chocks. Do not release the parking brake while the vehicle is raised.
- The surface on which the jack is standing must be firm and level. The jack must be placed on an underlay if the ground surface is not firm.
- Make sure that the distance between the underside of the wheel and the ground does not exceed 30 mm. The vehicle could otherwise slip off the jack or tip over.
- Do not change a wheel on an uphill or downhill slope. The vehicle could otherwise slip off the jack.
- Do not place your hands or feet under the raised vehicle.
- Do not lie under the raised vehicle.
- Make sure that nobody is in the vehicle when it is raised.
- Do not start the vehicle when it is raised, and avoid otherwise jolting or shaking it. The vehicle could otherwise slip off the jack.

► Park the vehicle on a firm and level surface.
► Apply the parking brake.
► Use chocks to protect the vehicle against rolling away.

Note

For further information on tyre pressure, see the "Wheels and tyres" section (→ Page 504).

Spare wheel

Always use spacers to secure wheels of the following sizes to the spare wheel holder:

- 355/50 R 22.5
- 365/50 R 22.5
- 375/50 R 22.5

- 385/55 R 22.5
- 385/65 R 22.5

Otherwise, the wheel or the spare wheel holder could be damaged.

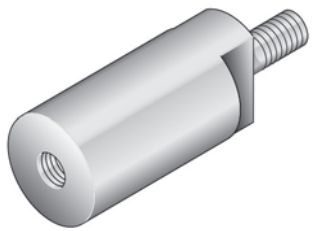

Spacer (from the vehicle tool kit)

Before securing the wheel to the spare wheel holder:

- ► Guide the retaining plate with the fastening bolts though the centre of the wheel rim.
- ► From the other side of the wheel, screw the three spacers from the vehicle tool kit onto the fastening bolts.

Removing the spare wheel

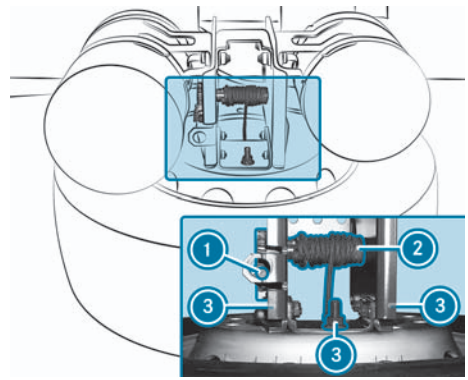

Example: spare wheel holder on the chassis

- ► If necessary, remove the side trim or side underride guard.
- ► Assemble the hand crank and the pump lever (vehicle tool kit) (→ Page 452).
- ► Fit the pump lever and the hand crank on spare wheel winch ①. Make sure that the clamping sleeve on spare wheel winch ① engages in the recesses on the pump lever.
- ► Turn spare wheel winch ① until cable ② is taut.
- ► Unscrew nuts ③ from the fastening bolts.
- ► Lower the spare wheel using spare wheel winch ① and completely unwind cable ②.
- ► Pull the spare wheel out to the side or to the rear.
- ► Remove the retaining plate with the fastening bolts though the centre of the wheel rim.

Spray nuts ③ regularly with rust-penetrating oil and remove rust and dirt.

Temporary spare wheel holder

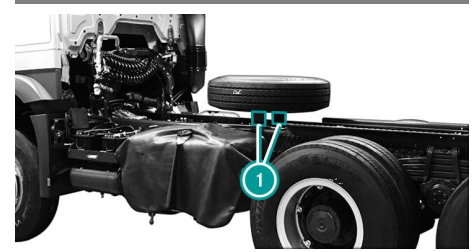

Example

Note

Note that the distance covered with the temporary spare wheel holder (1) must not exceed 2500 km.

Removing and fitting the wheel trim

Removing the wheel trim

- Unscrew screws (2).
- Use a suitable tool to carefully unclip the centre cover (1) from the recess (3) in the wheel trim.

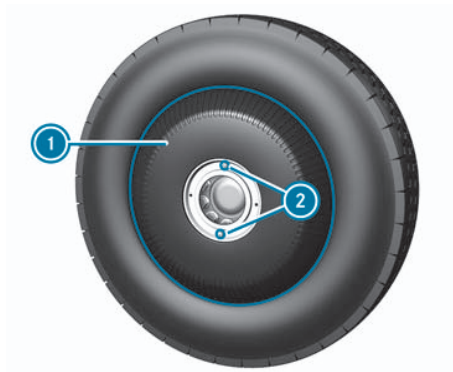

Wheel trim, single tyres

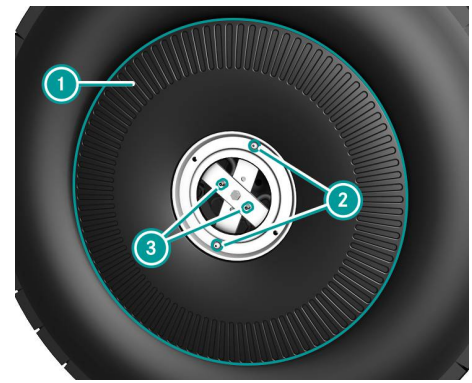

Wheel trim, twin tyres:

- **Twin tyres:** Unscrew the lock nuts (3) of the valve extensions.
- Remove the screws (2) and remove the wheel trim (1).

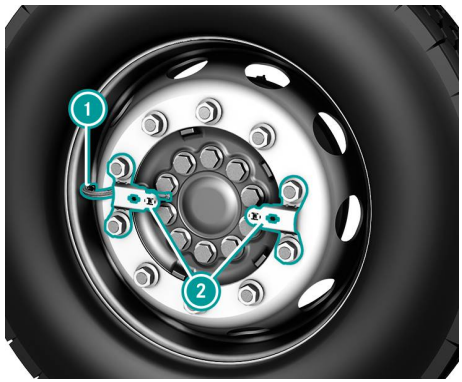

Retaining bridges, single tyres

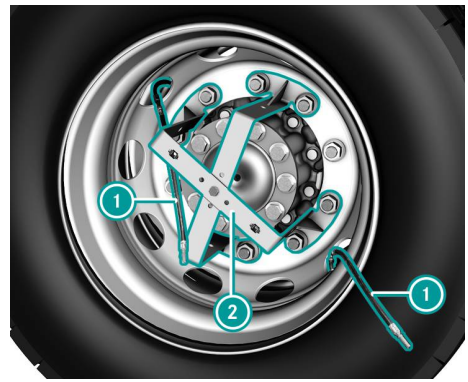

Retaining bridge, twin tyres

- Carefully undo the cable ties that secure the valve extensions (1) to the retaining bridges (2) and disconnect the valve extension from the retaining bridge.

> **Note**
> The cable ties are reusable. Do not use sharp objects to undo the cable ties to avoid causing damage.

- Unscrew the wheel nuts that secure the respective retaining bridge (2).
- Remove the retaining bridge (2) in question.

Attaching the wheel trim

- Position the retaining bridge (2) in question on the corresponding wheel bolts and secure with the wheel nuts, paying attention to the tightening torque (→ Page 539).
- Attach the valve extension (1) to the retaining bridge (2) in question and secure with the cable tie.
- **Twin tyres:** Guide the valve extensions to the holes provided in the retaining bridge (2) and secure with the counternuts.

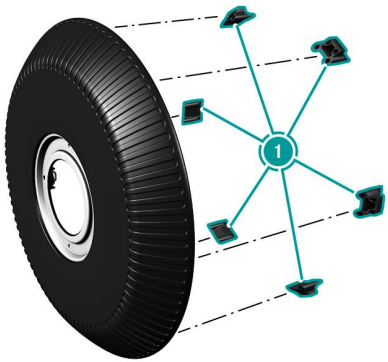

Support clamps of the wheel trim for single tyres

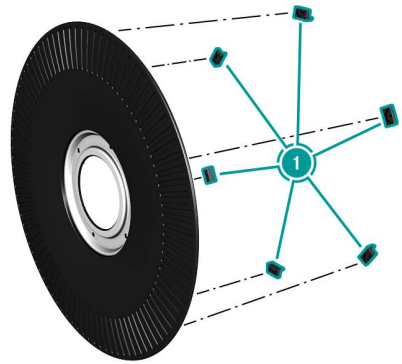

Support clamps of the wheel trim for twin tyres

► Before attaching the wheel trims, check that the support clamps (1) are secure and complete.

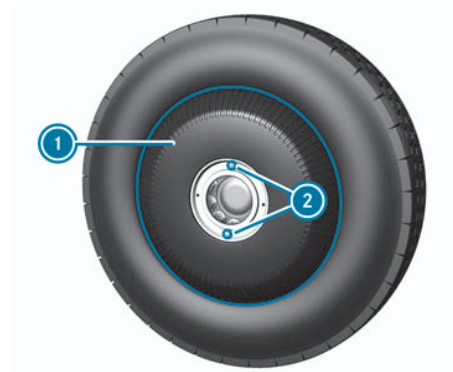

Example of wheel trim for single tyres

► Position the wheel trim (1), align it with the mounting holes (2) and screw it tight.

- **Twin tyres:** Check that the lock nuts (1) are firmly fitted.

- Position the centre cover (1), align it with the mounting holes and engage it by applying light pressure.
- Fasten the centre cover (1) using the screws (2).

Changing a wheel

Positioning the jack

- **Flat tyre, left:** Turn the steering wheel to the left as far it will go.

or

- **Flat tyre, right:** Turn the steering wheel to the right as far it will go.

Note

Only use the support block from the vehicle tool kit as a jack support.

Steel-sprung front axle

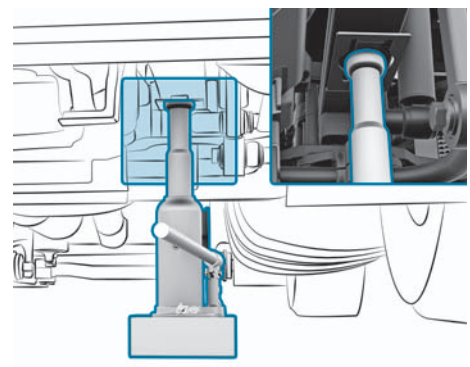

- Position the jack under the jack support point beneath the spring seat directly in front of the front axle.

Air-sprung front axle

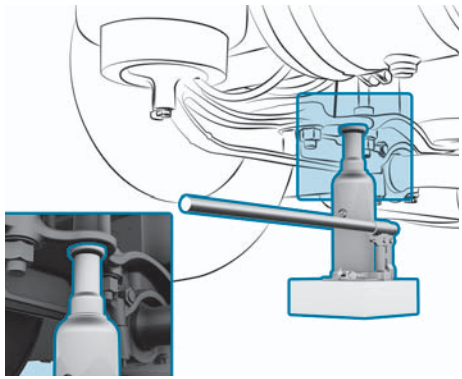

- Position the jack beneath the jack support point on the air suspension support directly in front of the front axle.

All-wheel drive front axle

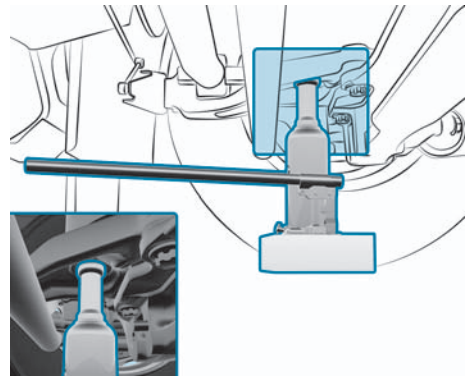

- Position the jack under the jack support point beneath the front axle.

Steel-sprung rear axle

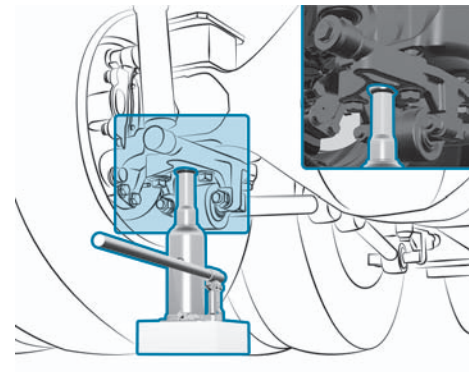

- Position the jack under the jack support point on the axle tube.

Air-sprung rear axle

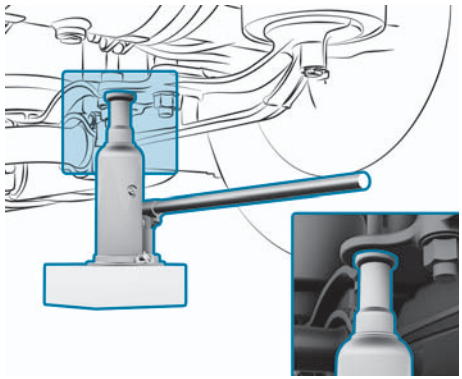

- Position the jack under the jack support point on the air suspension support.

Air-sprung leading axle

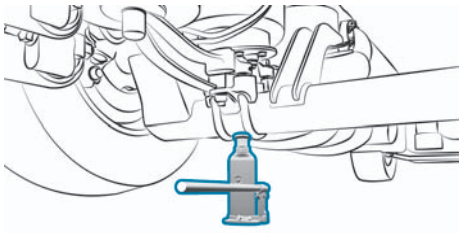

- Position the jack under the axle tube, between the mounting brackets.

Air-sprung trailing axle

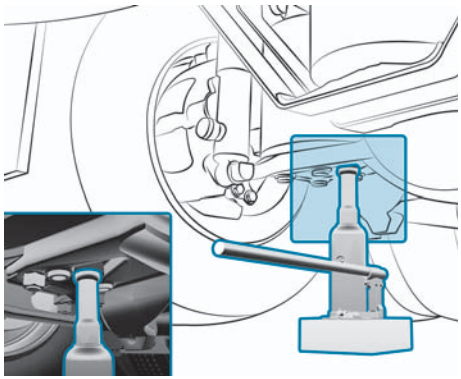

- Position the jack under the jack support point on the air suspension support.

Steered trailing axle

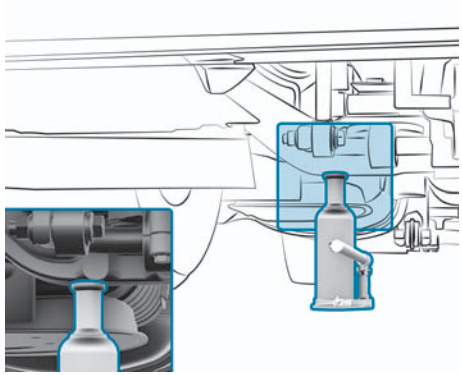

- Position the jack so that the jack plunger is centrally located under the axle carrier.

Removing a wheel

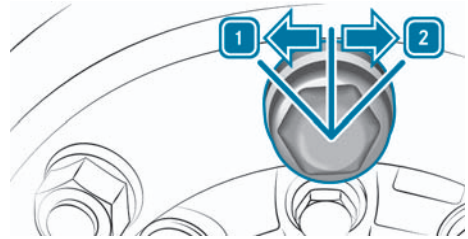

Wheel nuts

1 Loosen

2 Tighten

- **Vehicles with wheel trims:** Remove the wheel trim (→ Page 469).
- Using the wheel spanner, loosen the wheel nut covers 1 and remove them.

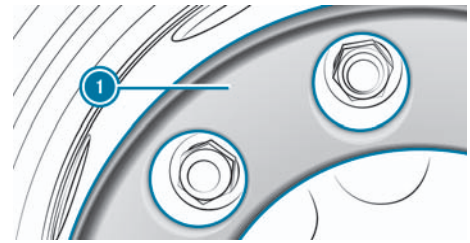

- Unscrew the wheel nuts that secure wheel nut cover 1.
- Remove wheel nut cover 1.
- Remove the remaining wheel nuts.
- Remove the wheel.
- Vehicles with twin tyres: Unscrew the wheel nuts of the inner wheel on the connecting flange and remove the connecting flange.
- Vehicles with twin tyres: Remove inner wheel.

Fitting a wheel

Note

Damage to the wheel nuts or wheel bolts due to the use of an impact wrench

If you use an impact wrench to tighten the wheel nuts or wheel bolts, you may damage them.

- Do not use an impact wrench to tighten the wheel nuts or wheel bolts.

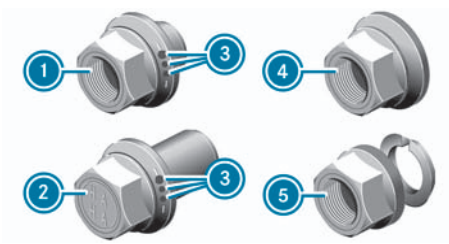

Wheel nuts

1. For single tyres with light-alloy wheels
2. For twin tyres with light-alloy wheels
3. Wheel nut identification for light-alloy wheels
4. With pressure plate (hub centring) for steel wheels
5. With conical spring washer for steel wheels

Before fitting a wheel

- Remove any rust and dirt from the contact areas of the wheel hub, disc wheel and wheel nuts.
- Lightly oil the friction contact surfaces between the pressure plate and the wheel nut.

Fitting a steel wheel

- **Vehicles with single tyres:** Fit the wheel in place and screw on two to three wheel nuts.
- **Vehicles with wheel trims:** Fit the retaining bridges (→ Page 469).
- Screw on the remaining wheel nuts with the wheel nut cover.
- **Vehicles with twin tyres:** Fit both wheels and screw on two or three wheel nuts.
- **Vehicles with wheel trims:** Fit the retaining bridge (→ Page 469).
- Screw on the remaining wheel nuts.
- Tighten the wheel nuts in a crosswise pattern, observing the tightening torque while doing so (→ Page 539).
- Fit the wheel nut covers, observing the tightening torque while doing so (→ Page 539).
- Check the tyre pressure (→ Page 504).
- **Vehicles with wheel trims:** Fit the wheel trim (→ Page 469).
- The wheel nuts must be retightened after driving 50 km.

Fitting a light-alloy wheel

Assembly sleeve for vehicles with light alloy wheels

- **Vehicles with single tyres:** Fit the assembly sleeve (vehicle tool kit) on the wheel bolt before positioning the wheel.

- Fit the wheel in place and screw on two to three wheel nuts.
- **Vehicles with wheel trims:** Fit the retaining bridges (→ Page 469).
- Pull off the mounting sleeve.
- Screw on the remaining wheel nuts with the wheel nut cover (if available).
- **Vehicles with twin tyres:** Fit the assembly sleeve (vehicle tool kit) on the wheel bolt before positioning the wheels.
- Fit both wheels and screw on two or three wheel nuts.
- **Vehicles with wheel trims:** Fit the retaining bridge (→ Page 469).
- Pull off the mounting sleeve.
- Screw on the remaining wheel nuts.
- Tighten the wheel nuts in a crosswise pattern, observing the tightening torque while doing so (→ Page 539).
- Fit the wheel nut cover caps (if available), observing the tightening torque while doing so (→ Page 539).
- Check the tyre pressure (→ Page 504).
- **Vehicles with wheel trims:** Fit the wheel trim (→ Page 469).
- The wheel nuts must be retightened after driving 50 km.

Fitting twin tyres 14.00 R 20

- Before fitting the inner tyre, check that all of the conical spring washers are seated properly on the wheel studs. The round side of the conical spring washers must face the outside.
- Fit the inner wheel.
- Check the wheel centring. The wheel studs must be located in the centres of the bores in the disk wheels.
- Fit the connecting flange in place and screw on two to three wheel nuts with conical spring washers.
- Check that the flange is properly centred. The wheel studs must be in the centre of the bores in the connecting flange.
- Screw on the remaining wheel nuts with the conical spring washers.
- Tighten the wheel nuts in a crosswise pattern, observing the tightening torque while doing so (→ Page 539).
- Fit the outer wheel and screw on two or three wheel nuts with conical spring washers.
- Check the wheel centring. The wheel studs must be located in the centres of the bores in the disk wheels.
- **Vehicles with wheel trims:** Fit the retaining bridge (→ Page 469).
- Screw on the remaining wheel nuts with the conical spring washers.
- Tighten the wheel nuts in a crosswise pattern, observing the tightening torque while doing so (→ Page 539).
- Check the tyre pressure (→ Page 504).
- **Vehicles with wheel trims:** Fit the wheel trim (→ Page 469).
- Retighten the wheel nuts on the inner wheel after driving 50 km and the wheel nuts of the outer wheel after driving a further 50 km.

Retightening the wheel nuts

Danger

Risk of accident due to incorrect tightening torque

The wheels may come loose if the wheel bolts or wheel nuts are not tightened to the prescribed torque.

- ► Ensure that the wheel bolts or wheel nuts are tightened to the prescribed tightening torque.
- ► If necessary, consult a qualified specialist workshop and do not move the vehicle.

- ► Observe the instructions and safety instructions on "Changing a wheel in the event of a flat tyre" (→ Page 465).
- ► Observe the wheel nut tightening torques (→ Page 539).
- ► Have all wheels retightened after driving 50 km.
- ► When using new or newly-painted wheel rims, have the tightening torque of the wheel nuts checked again after having driven approximately 1000 km to 5000 km.
- ► Retighten the wheel nuts in a cross-wise pattern.

On light-alloy wheels, the wheel nuts are not flush with the wheel studs when tightened.

Removing and fitting a Trilex® wheel

Removing a Trilex® wheel

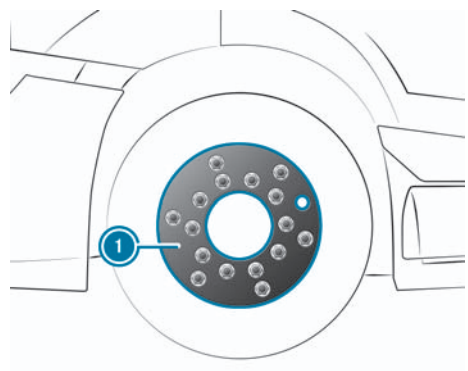

- ► Unscrew the wheel nuts that secure wheel nut cover 1.
- ► Remove wheel nut cover 1.
- ► Remove the remaining wheel nuts.
- ► Remove the wheel.

Fitting a Trilex® wheel

Before you fit the wheel, remove any rust and dirt from the contact areas on the following parts:

- wheel hub
- disc wheel
- Wheel nuts

- ► Place the wheel in position.
- ► Screw on two opposing wheel nuts.
- ► Screw on the remaining wheel nuts with the wheel nut cover 1.
- ► Tighten the wheel nuts in a clock-wise pattern and in several stages, observing the tightening torque while doing so (→ Page 539).
- ► The wheel nuts must be retightened after 10 km and again after a further 50 km.

Removing and fitting a Trilex® rim with tyre

Removing a Trilex® rim with tyre

Danger

Risk of injury due to tensioned clamping plates

The clamping plates on the Trilex® rims are highly tensioned.

If you remove the nuts completely, the clamping plates may suddenly pop out of the rim.

- Once all the clamping plates are no longer under tension, unscrew and remove the nuts on the clamping plates.

- Unscrew the wheel nuts that secure wheel nut cover 1.
- Remove wheel nut cover 1.

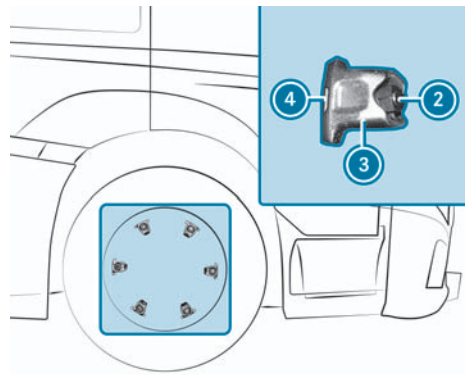

Example: single tyres

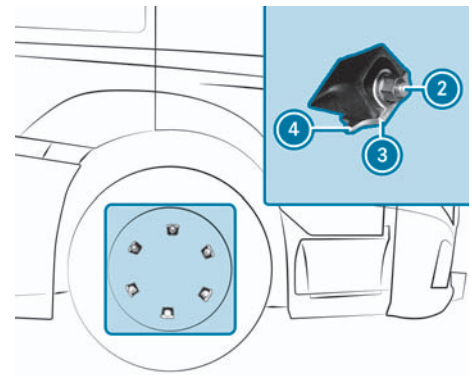

Example: twin tyres

- Loosen nuts 2 on the clamping plates 3.
- Position the assembly lever (from the vehicle tool kit) on recess 4 and release clamping plates 3 with a sharp pull.
- Once all the clamping plates have been loosened, remove nuts 2 on clamping plates 3.
- Remove clamping plates 3.
- Remove the Trilex® rim with tyre.

Fitting a Trilex® rim with tyre

Danger

Risk of fire and accident due to abraded tyre valves

Tyre valves in contact with the wheel spider can be abraded, resulting in a loss of tyre pressure.

This can

- damage or destroy the tyres.
- cause tyres to overheat and catch fire.
- jeopardise road and traffic safety.

► Guide the tyre valve or valve extension through the centre of the valve recess.

Note

Damage to the wheel due to imbalance

Tightening the nuts of the clamping plates in a crosswise pattern would stress the rim and cause the wheel to become imbalanced.

► Tighten the nuts clockwise.

► Tighten the nuts to the specified torque in several stages.

Before you fit the wheel, remove any rust and dirt from the contact areas on the following parts:

- spoke heads
- disc wheel
- nuts
- clamping plates

► Vehicles with single tyres: Position the Trilex® rim with tyres on the wheel spider.

► Vehicles with twin tyres: Position the inner Trilex® rim with tyres on the wheel spider.

► Vehicles with twin tyres: Position the spacer ring so that the valve on the inner Trilex® rim fits in the recess.

► Vehicles with twin tyres: Position the outer Trilex® rim with tyres so that the valve is opposite the valve on the inner Trilex® rim.

► Position clamping plates ③ on the bolts.

► Tighten nuts ② slightly and make sure that the rim is not under tension.

► Tighten nuts ② on clamping plates ③ in a clockwise direction in several stages, observing the tightening torque whilst doing so (→ Page 539).

► Vehicles with single tyres: Screw wheel nut cover ① to the wheel using the appropriate wheel nuts.

► Vehicles with single tyres: Tighten the wheel nuts in a clockwise pattern and in several stages, observing the tightening torque while doing so (→ Page 539).

► Retighten the wheel nuts and nuts ② on the clamping plates ③ after 10 km and again after a further 100 km.

Electrical fuses

Remove the main fuse carrier cover

Notes

Danger

Risk of accident and injury caused by overloaded lines

If you manipulate or bypass a faulty fuse or if you replace it with a fuse with a higher amperage, the electric lines may be overloaded.

This may result in a fire.

- Always replace faulty fuses with the specified new fuses having the correct amperage.

Individual electric circuits are protected by safety fuses or automatic circuit breakers.

Blown fuses or defective automatic circuit breakers must be replaced with equivalent fuses with the fuse ratings recommended in the fuse assignment diagram. Fuses with the same fuse rating are the same colour.

You can obtain further information from an authorised Mercedes-Benz Trucks Service Centre.

The fuse assignment diagram is on the inside of the main fuse carrier cover.

If the newly inserted fuse also blows, have the cause traced and rectified at a qualified specialist workshop.

- If an electric circuit fails, switch off the consumer and the vehicle.

Remove the main fuse carrier cover

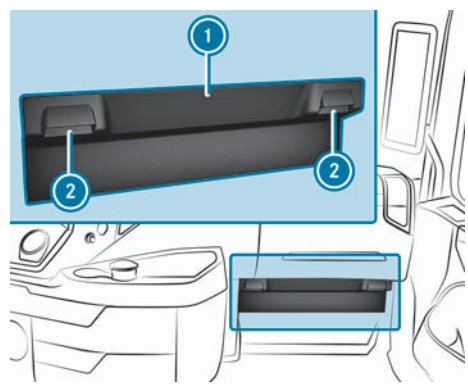

- Open fasteners (2) and remove the cover (1).

Remove the control unit from the main fuse carrier

To access the main fuse carrier, the ASAM control unit must first be unscrewed and folded to the side.

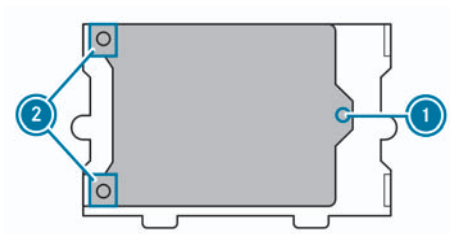

- Unscrew screw (1).
- Detach the control unit from hinges (2) and fold to the side.
  - ◁ The main fuse carrier is now accessible.

Open the fuse box in the cab

Other fuses are located on the side of the fuse box behind the cab.

Electrical fuses

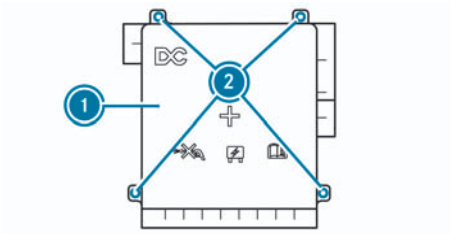

- Remove screws (2) and remove the cover (1).

Fuse assignment diagram

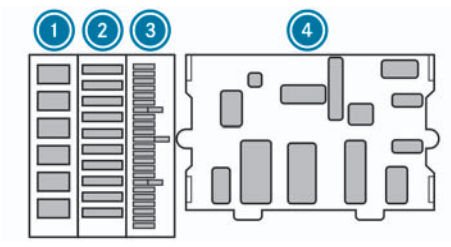

Main fuse carrier

1. Relays in module°A32
2. Relays in module°A31
3. Fuses in module°A3
4. Fuses, relays, and diodes in the PDM cabin module

Relays in module A32

No.	Symbol	Consumer
K1		Windscreen heater
K2		Windscreen heater
K3		Pre-installation, additional headlight
K4		Load relief relay, differential lock and transfer case
K5	ERA	CB radio with ERA-GLONASS
K6		Unassigned

Relays in module A31

No.	Symbol	Consumer
K1		Work lamps
K2		Transfer case oil cooling system
K3		12 V radio, terminal 15R TCC touch with sound system
K4		Yellow position lamp (middle of the roof)
K5		12 V radio, terminal 58
		TCC touch with ERA-GLONASS
K6		Hydraulic auxiliary drive (HAD) control unit, terminal 15, load relief relay
		Cargo liftgate
K7		Hydraulic auxiliary drive (HAD) fan
		Cargo liftgate
K8		Pre-installation, additional headlight
K9		LubeTronic 5Point
K10		Headlamp cleaning system

Fuses in module A3

No.	Symbol	Consumer	Fuse rating
F1		Work lamps (E23/X155/X200)	10 A
F2		Rotating beacon (S6)	10 A
F3	24V	24 V sockets (X136/X168/X199/X220)	15 A
F4	24V	24 V sockets (X136/X168/X199/X220)	15 A
F5		Socket for torch (X149)	10 A
		Illuminated Mercedes star (S44)	10 A

No.	Symbol	Consumer	Fuse rating
F6		24-V CB radio (A68)	5 A
		12-V CB radio (A68) pre-installation	5 A
F7		Cab-width windscreen heater 2.3 m	25 A
		Cab-width windscreen heater 2.5 m	30 A
F8		MEILLER pre-installation	10 A
F9		Hydraulic auxiliary drive (HAD) control unit (A83)	10 A
F10		Hydraulic auxiliary drive (HAD) fan (M25)	15 A
F11		12 V TCC Touch (A9)	15 A
		12 V radio (A9) pre-installation	10 A
	WSPC	12 V wireless smartphone connection (A185)	10 A
F12	MMB	12 V multimedia box (X246)	10 A
		12 V Android Blackbox (A158)	10 A

No.	Symbol	Consumer	Fuse rating
F13	ICS HUS	12 V instrument cluster display + head unit (A153/A154)	10 A
F14	SRRR	12 V side radar	10 A
	EPAC	12 V stationary air-conditioning system controller (A147)	10 A
F15	ADR	ADR England pre-installation (X193/X194)	5 A
F16		Transfer caseoil cooling (M24)	10 A
F17		Cab-width windscreen heater 2.3 m	25 A
		Cab-width windscreen heater 2.5 m	30 A
F18		Non-MB body electrical system (S39/S40)	20 A
		Semitrailer trailing axle (S87)	20 A
F19	VSW	Video switch (A163)	10 A
F20		Headlamp cleaning system (M16/M17)	15 A
F21		Unassigned	
F22		Unassigned	

No.	Symbol	Consumer	Fuse rating
F23		Unassigned	

Fuses in the PDM cabin module

No.	Symbol	Consumer	Fuse rating
F1		Exhaust gas aftertreatment	10 A
		Battery disconnect switch (A33)	10 A
F2		ABS trailer power socket, 7-pin (X103), 5-pin (X103a)	10 A
		Cargo liftgate	10 A
F3		Unassigned	
F4		Unassigned	
F5		Transmission control (TCM) - (A5)	10 A
	MCM	Engine management (A4), (OM460) - (A4a)	10 A
F6		Turbo retarder clutch (A69)	10 A
	CPC	Drive control (A3)	10 A
		Hydraulically driven axle (HAD)/CAN adapter box	10 A

Electrical fuses

No.	Symbol	Consumer	Fuse rating
F7	CTP	Common telematics platform (A150)	10 A
		Tachograph (P1)	10 A
		Roller sunblind	10 A
F8		Instrument cluster (A1)	5 A
		Performance-related heavy vehicle fee (LSVA)	5 A
		Winter service	5 A
		Position marker lamps	5 A
		Airbag	5 A
		Brake system (A10b)	5 A
		Toll Collect	5 A
		Control and operating device heating (A12)	5 A
		Meiller tipper radio control (A82)	5 A
	ERA	ERA-GLONASS	5 A
F9		Stowage compartment lighting	10 A
		Roof stowage compartment lighting	10 A
		Bunk lighting	10 A

No.	Symbol	Consumer	Fuse rating
	24V 12V	Remote voltage converter T1/terminal 15R for 12 V relay radio	10 A
		Refrigerator box	10 A
F10		Unassigned	
F11		Fuel filter heating, engine (R17)	15 A
F12		Unassigned	
F13		Retarder (A11)	20 A
F14		Unassigned	
F15		Transmission control (TCM) - (A5)	15 A
F16		Body manufacturer, terminal 30	
F17		Body manufacturer, terminal D+	
F18		Radiator shutters (A54)	10 A
	RDF	Front radar sensor (A15a)	10 A
	RDF	Front radar sensor (A15a)	10 A
	RDF	Front radar sensor (A15a)	10 A

No.	Symbol	Consumer	Fuse rating
	RDF	Front radar sensor (A15b)	10 A
F19		Fuel filter heating frame (R11)	15 A
F20		Turbo retarder clutch (A69)	20 A
F21		Performance-related fee for retrofitting heavy vehicle (LSVA)	20 A
		Pre-installation performance-related heavy vehicle fee (LSVA) (via interface)	20 A
		Trailer socket, 15-pin (X102)	20 A
		Trailer socket 13 (15)-pin (X102a)	20 A
		Trailer socket, 15-pin add. (X222)	20 A
		Trailer socket 13 (15)-pin add. (X222a)	20 A
		Trailer voltage converter	20 A
F22	P	Electronic air processing unit (A18)	15 A
F23		Cab tilt pump	5 A

No.	Sym-bol	Consumer	Fuse rating
		Subwoofer (B94)	5 A
F24	24V 12V	Voltage converter (T3)	15 A
F25	24V 12V	Voltage converter (T2)	15 A
F26		Sliding sunroof motor (M12)	15 A
		Sliding sunroof motor (M12)	20 A
	2	Auxiliary heating, CAN adapter box	20 A
F27	24V	12/24 Vsockets	15 A
F28	CPC	Drive control CPC3 (A3), CPC5 (A3a)	20 A
F29		Brake system (EBS) - (A10b)	20 A
F30		Toll Collect	10 A
		Performance-related fee for retrofitting heavy vehicle (LSVA)	10 A
		ATA (anti-theft alarm system) (A6)	10 A
		Tachograph (P1)	10 A
F31	CTP	Common telematics platform (A150), Fleet management system, BAT	10 A

No.	Sym-bol	Consumer	Fuse rating
		Tyre pressure monitor-ing system, BAT	10 A
	VRDU	Video radar decision unit, BAT	10 A
F32		Display mirror, driver's side (A159)	5 A
		Smart Tacho	5 A
	ERA	ERA-GLONASS	5 A
F33		Unassigned	
F34	OBD	Diagnostics connec-tion	10 A
F35		Instrument cluster (A1)	10 A
		Heating (A12b)/ heating (A12)	10 A
		Amplification relay	10 A
F36		Steering-wheel but-tons (A19) or (A19a)	10 A
	P	Parking brake lever (A157)	10 A
F37		Unassigned	
F38		Transmission control (TCM) - (A5)	15 A

No.	Sym-bol	Consumer	Fuse rating
F39	ASAM	Signal acquisition module (A7), energy supply	20 A
F40		Radio/navigation (A9)	15 A
F41		Unassigned	
F42	F	Driver's door module (A16)	20 A
F43	BF	Front passenger's door module (A17)	20 A
		Unassigned	
F44		Electrical immobiliser control unit (A156)	5 A
F45		Smart Tacho	5 A
F46		Driver's seat heating	15 A
		Front passenger's seat heating	15 A
F47		Cigarette lighter	5 A
		Socket	15 A
F48		Central gateway (A2)	5 A
		Steering wheel angle sensor (B66)	5 A
		Mirror display, co-driver's side (A160)	5 A

Electrical fuses

No.	Symbol	Consumer	Fuse rating
F49		Integrated Predictive Powertrain Control (IPPC)	5 A
		Roller sunblind	5 A
F50		Brake system (A10b)	10 A
F51		Retarder (A11)	10 A
		Integrated Predictive Powertrain Control (IPPC)	10 A
F52		LubeTronic	10 A
		Pre-installation, trailer coupling (Q9A)	10 A
F53	VSW	Video switch A163, terminal 15	10 A
		Pre-installation, reversing camera	10 A
	VRDU	Video radar decision unit	10 A
		Unassigned	
F54	24V 12V	Voltage converter T1	15 A
F55	XMC	Extension module cabin (XMC) (A22)	25 A
F56		Blower motor	25 A
F57		Power socket (X171)	25 A

No.	Symbol	Consumer	Fuse rating
F58		Non-MB body electrical system (S38)	20 A
F59	ASAM	Signal acquisition module (A7), energy supply 2 BAT	40 A
F60	ASAM	Signal acquisition module (A7), energy supply 1 BAT	60 A

Relays in the PDM cabin module

No.	Symbol	Consumer
K1		Terminal 15 relay
K2	D+	Terminal°D+ relay
K3		Trailer brake light
K4		Energy-saving mode 2 – bistable relay
K5		Terminal 15R relay
K6		Terminal 15 relay
K7		Terminal 15 relay
K8		Energy-saving mode°1 – bistable relay

Diodes in the PDM cabin module

No.	Symbol	Consumer
D1		Signal horn
D2		Cargo liftgate
D3		Unassigned
D4		Unassigned

Fuses in the PDM chassis module (fuse box in the cab)

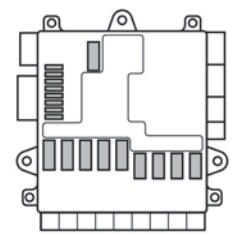

Plug fuses

No.	Symbol	Consumer	Fuse rating
F1		Electronic air processing unit (EAPU)	15 A
F2		Electric stationary air-conditioning system	25 A

No.	Symbol	Consumer	Fuse rating
F3		Electric stationary air-conditioning system	25 A
F4		Electric stationary air-conditioning system	25 A
F5		ALAC	25 A
		Level/roll control (CLCS) (A26)	25 A
F6		Additional steering axle (ASA) (A34)	25 A
F7		Trailer ABS	25 A
F8		Trailer (X102) (X102a)	25 A
		Additional trailer socket (X222a) (X222)	
		12-V trailer voltage converter (A132)	

Screw-in fuses

No.	Symbol	Consumer	Fuse rating
X1		PDM cabin (A8)	150 A
X2		Electric stationary air-conditioning system	40 A
X3		Exhaust gas aftertreatment	40 A
X4		PDM cabin (A8)	40 A
X5		Pre-installation, kitchenette or EE	80 A
X6		RPS	40 A
		APS	40 A
X6a		APS 3	40 A
X7		Cab tilt pump	40 A
X8		Unassigned	
X9		Unassigned	
X10		Unassigned	
X11		Unassigned	
X12		Bodybuilder	300 A
X13		PDM cabin (A8)	150 A
X14		Battery with sensor	

Checking safety fuses and the automatic circuit breaker

Checking and replacing a safety fuse

- Pull the fuse out of the module using the pliers and carry out a visual inspection.
- If the fuse wire has melted, replace the blown fuse with a spare fuse.
- Switch the consumers on and check that they are functioning correctly.
- If the safety fuse blows again, have the electrical system checked at a qualified workshop.

Check and switch on an automatic circuit breaker

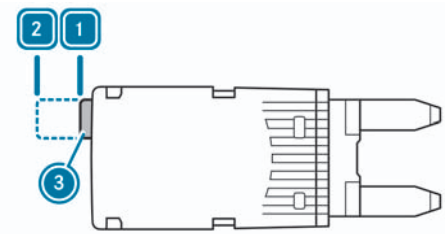

If an automatic circuit breaker is tripped, pin ③ moves to the OFF position [2].

- Pull the automatic circuit-breaker out of the module.
- Press pin ③ to ON position [1].
- Insert the automatic circuit breaker again.

Information on the compressed-air system

- Switch the consumers on and check that they are functioning correctly.
- If the automatic circuit-breaker is tripped again, have the electrical system checked at a qualified specialist workshop.

Information on the compressed-air system

Note

Damage to the compressed-air system due to contaminated and humid air

The compressed air does not pass through the compressed-air dryer if the compressed-air system is filled via the following connections:

- connection 28 on the electronic air processing unit
- the connections on the brake value sensor beneath the maintenance flap

If the supply pressure of the external compressed-air source is below 11 bar, it cannot be guaranteed that all the pressure circuits will be filled.

Only fill pressure circuits with max. 12.5 bar.

Supply pressure that is too high, or contaminated and humid air from the external compressed-air source, can damage components of the compressed-air system.

- Fill the compressed-air system using a pressure between 11 bar and 12.5 bar.
- Fill the compressed-air system with clean and dry air.

System-dependent supply pressures can be found in the "Technical data" section (→ Page 537).

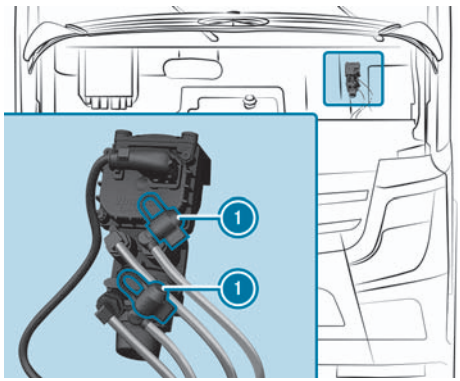

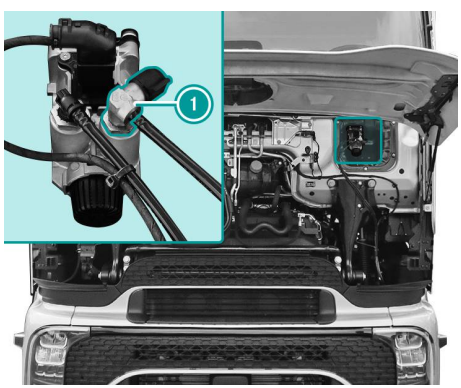

Fill the compressed-air system via front filler connections 1 on the brake value sensor when the vehicle is switched off.

This does not fill the pressure circuit of the air suspension.

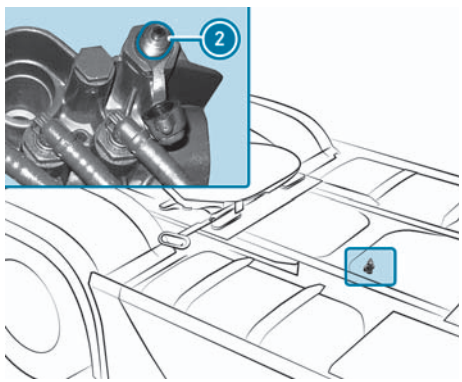

If the compressed air system is filled via connection 28 ② on the electronic air treatment unit, the pressure circuit for the air suspension is also filled.

Vehicles with ProCabin:

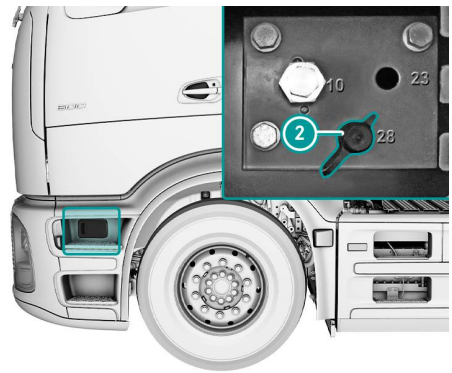

Connection°28 ② is connected to the electronic air processing unit and is located under the cover on the driver's side. To open the cover, swing it upwards.

> **Note**
> If the compressed-air system is filled via connection°28 ②, the pressure circuit of the air suspension is also filled.

The electronic air processing unit contains the following components in a single unit:

- Pressure regulator
- Compressed-air dryer
- Multicircuit protection valve
- Pressure limiting valve
- Control unit
- Electronic parking brake

Check the following points before towing away:

- The spring brake actuators of the parking brake are released (→ Page 497).
  If the compressed-air supply is insufficient, release the spring-loaded brake cylinders manually (→ Page 497).
- Check whether workshop mode of the electronic parking brake is activated (→ Page 238).

Jump-starting, tow-starting and towing away

Performing a jump start

Danger

Risk of explosion when the battery is frozen

A discharged battery can freeze at temperatures near the freezing point.

If you then provide starting assistance or charge the battery, battery gas may escape.

- Always thaw a frozen battery before charging it or providing starting assistance.

If the warning and indicator lamps do not light up in the instrument cluster at temperatures around or below freezing, it is highly probable that the discharged battery has frozen. In this case, do not provide starting assistance or charge the battery.

The service life of a battery that has been thawed may be dramatically shortened.

The starting characteristics may be impaired, especially at low temperatures.

Danger

Danger of chemical burns from battery acid

Battery acid is caustic.

- Avoid contact with the skin, eyes, or clothing.
- Do not inhale battery gases.
- When carrying out maintenance work on the battery, wear acid-resistant protective clothing, particularly safety glasses, protective gloves, and aprons.
- Do not lean over a battery.
- Keep children away from the battery.
- In case of contact with battery acid, immediately rinse the affected area thoroughly with plenty of clear water and seek medical assistance promptly.
- If you get battery acid in your eyes, as soon as possible rinse them thoroughly with plenty of clean water. Seek medical attention as soon as possible.

Danger

Risk of explosion due to an explosive mixture of gas

An explosive mixture of gas may escape from the battery during the charging process and when providing starting assistance.

- Avoid fire, naked flames, sparks, and smoking.
- Ensure sufficient ventilation.
- Do not lean over a battery.

Note

Damage to the battery or electronic components due to improper jump starting

To prevent damage:

- Do not use a rapid battery charger for jump starting.
- When using a portable charger (batteries with a mains adapter), remove the mains plug before jump starting.

- ► Only accept starting assistance from vehicles with a 24 V system.
- ► Use jump leads protected from reverse polarity with a cable cross section of 35 - 50 mm² and insulated terminal clamps.
- ► Empty batteries can freeze if the outside temperature falls below -10°C. In this case, do not start the vehicle. First, thaw out the battery.
- ► Do not connect the negative terminal clamp of the jump lead to the chassis. Vehicle parts may otherwise be damaged.

Requirements

- Make sure that the vehicles are not touching.
- The parking brake is applied.
- All electrical consumers are switched off.
- The vehicle is switched off.

Observe the safety instructions and protective measures when handling the battery (→ Page 439).

After starting assistance, have the batteries checked at a qualified workshop.

Vehicles without a jump-start connection point

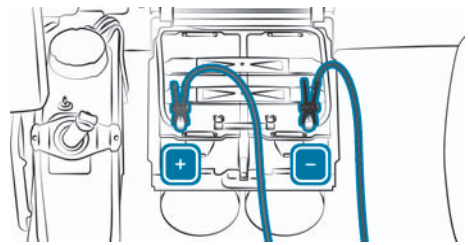

Connecting the jump lead

- ► Remove the battery box cover (→ Page 442).
- ► First connect the positive terminal clamp of the jump lead to the positive terminal of the other vehicle's battery and then to the positive terminal [+] of the starter battery.
- ► First connect the negative terminal clamp of the jump lead to the negative terminal of the other vehicle's battery and then to the negative terminal [–] of the starter battery.
- ► Leave the engine of the assisting vehicle running at an elevated engine speed.
- ► Start the vehicle and leave it running at idle speed.

Disconnecting the jump lead

- ► First disconnect the negative terminal clamps of the jump lead from the negative terminals.
- ► Disconnect the positive terminal clamps of the jump lead from the positive terminals.

Vehicles with a jump-start connection point

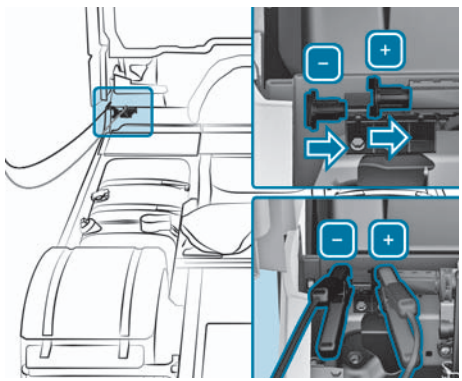

Connecting the jump lead

- First connect the positive terminal clamp of the jump lead to the positive terminal of the other vehicle's battery.
- Slide back the red protective cap with the other positive terminal clamp of the jump lead and connect the positive terminal clamp to the [+] positive terminal.
- First connect the negative terminal clamp of the jump lead to the negative terminal of the other vehicle's battery.
- Slide back the black protective cap with the other negative terminal clamp of the jump lead and connect the negative terminal clamp to the [–] negative terminal.
- Leave the engine of the assisting vehicle running at an elevated engine speed.
- Start the vehicle and leave it running at idle speed.

Disconnecting the jump lead

- First disconnect the negative terminal clamps of the jump lead from the negative terminals.
  - ◁ The black protective cap of the jump-start connection point springs back into its original position.
- Disconnect the positive terminal clamps of the jump lead from the positive terminals.
  - ◁ The red protective cap of the jump-start connection point springs back into its original position.

Notes on tow-starting/towing away

Danger

Risk of accident if the Active Brake Assist is activated when towed away, or when the vehicle is used as a utility vehicle

If, for example, the Active Brake Assist is activated while you are using your vehicle as a utility vehicle or you are towing, the vehicle may brake automatically.

The wheels may lose their grip.

- Deactivate the Active Brake Assist in this or similar situations if possible.

Danger

Risk of accident due to lack of compressed-air supply

If the engine is not running, the power steering system and the compressed-air supply will not work. They need considerably more power for steering. In the event of pressure loss, the spring-loaded brake cylinder of the parking brake may activate and therefore brake the vehicle in an uncontrolled manner.

This could cause you to lose control of the vehicle.

- Always use a tow bar.
- Always ensure that compressed air is supplied, e.g. using an external source of compressed air.

Danger

Risk of accident when towing away with the vehicle switched on

When towing away with the front axle raised and the vehicle switched on, the ASR may brake the wheels of the rear axle in an uncontrolled manner.

The vehicle may break free.

- Switch off the vehicle before towing with the front axle raised.

Note

Damage to the vehicle due to incorrect towing

If the vehicle is not switched on during towing, the transmission, brakes and air suspension may be damaged.

- Remove the drive shafts before towing.
- Charge the compressed-air system or release the spring-loaded brake cylinder manually.
- While towing the vehicle away, constantly monitor the driving level.

Note

Damage to implements and bodies when towing away

Attachments and bodies can affect the vehicle height and width.

If the vehicle is being transported on a low loader, the permitted vehicle height may be exceeded.

- Pay attention to the headroom of structures, e.g. of bridges.
- Fold in the wind deflectors when towing away with the rear axle raised.

Specialist knowledge beyond the scope of these operating instructions is required for tow-starting and towing the vehicle away. Only have your vehicle tow-started or towed away by a professional towing and recovery company.

Only in exceptional cases, e.g. when leaving danger zones, should the vehicle be tow-started or towed away with the propeller shaft installed.

Only tow the vehicle with raised front axles.

Before towing the vehicle away, check whether workshop mode of the parking brake is activated (→ Page 238).

Vehicles with power steering: Only tow-start the vehicle if the vehicle is

switched on and the warning lamp is not illuminated on the instrument cluster. Tow-start the vehicle on a straight stretch of road.

Note

Information on towing away and recovering can be found on the Internet at:

https://www.mercedes-benz-trucks.com/

You can obtain further information from an authorised Mercedes-Benz Trucks Service Centre.

Manoeuvring and tow-starting/towing away

If the vehicle is being transported on a low loader, the permitted vehicle height may be exceeded. Pay attention to the headroom of structures, e.g. of bridges.

- Before towing, activate the workshop mode of the parking brake (→ Page 238).
- If necessary, charge the compressed-air system using an external source of compressed air (→ Page 488).
- If there is insufficient reservoir pressure to release the parking brake, release the spring-loaded brake cylinders manually (→ Page 497).
- Before towing away, agree on a clear signal with the towing vehicle driver. Adapt your driving style to the more difficult conditions.

Coupling jaw

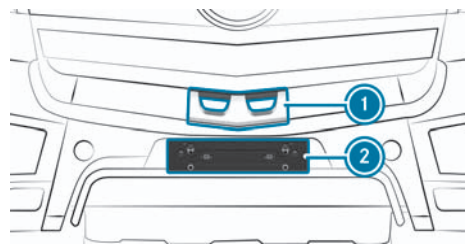

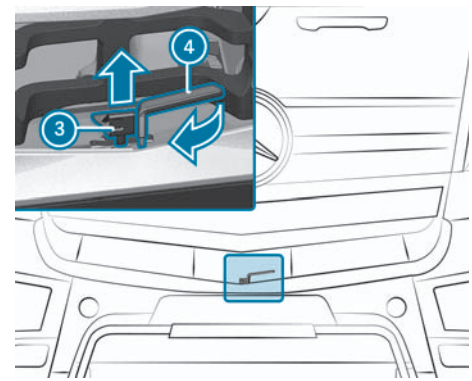

Use the front coupling jaw for manoeuvring, tow-starting and towing away.

The coupling pin is prevented from rotating (e.g. when towing with a steel cable) by a safety spring ③ secured with a retaining pin.

- Vehicles with a large angle of approach: Fold out the folding step.
- Remove the coupling pin cover ① forwards.
- Grasp the licence plate holder ② at the sides and swivel it downwards.

- Using your thumb, push the safety spring ③ with retaining pin upwards to release the coupling pin ④.
- Turn the coupling pin ④ 90° clockwise and pull it out upwards.
- Attach the tow bar.
- Insert the coupling pin ④ downwards through the tow bar eyelet and turn it 90° anti-clockwise back to its original position.
  - ◁ The retaining pin engages audibly.
- Position the coupling pin cover ① and clip it in place.

Front towing eyes

Danger

Risk of accident if unapproved towing eyes are used

The towing eyes may break.

The vehicle may fall out of the bracket during towing.

- For safety reasons, only use towing eyes that are authorised and approved for raising your vehicle.

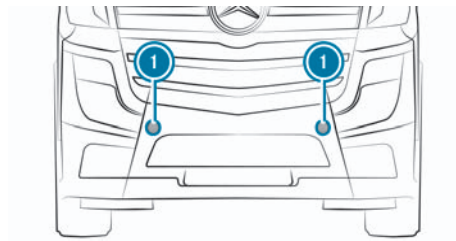

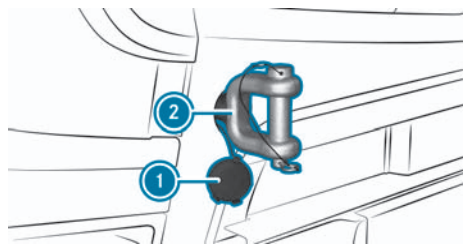

If a towing eye ② is not included in the vehicle tool kit, you can obtain it ② from an authorised Mercedes-Benz Trucks service centre.

- Press the area marked with an arrow on the cover ① in order to open it.

The towing eye ② is screwed into the front end of the frame head behind the cover ①. Make sure that the towing eye is completely screwed in. If the thread is dirty, clean it before screwing the towing eye in.

The towing eyes are made from a special material with higher strength values. Only use the original towing eyes.

If the vehicle is raised at the front for towing away, you need a second towing eye.

The person towing away the vehicle should bring one with them, or you can purchase one at an authorised Mercedes-Benz Trucks Service Centre.

Vehicles with preinstallation for front-mounted implements: The threaded hole is not suitable for towing eyes. Do not use towing eyes for tow-starting and towing away. Use the front coupling jaw for tow-starting and towing away the vehicle.

Vehicles with ProCabin

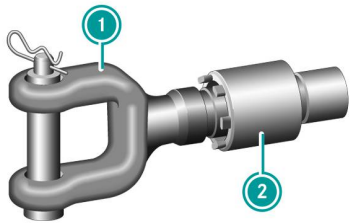

If a towing eye ① with extension ② is not included in the vehicle tool kit, you can obtain the towing eye with extension from an authorised Mercedes-Benz Trucks service centre.

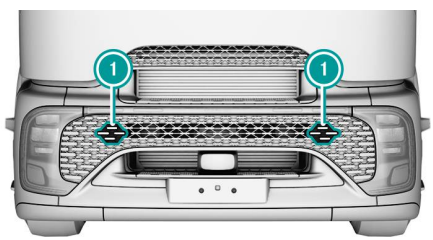

- Remove the respective cover ① to expose the access to the frame head.

The towing eye is screwed into the frame head behind the cover ①. Make sure that the towing eye with extension is completely screwed in. If the thread is dirty, clean it before screwing in the towing eye with extension.

The towing eyes and extensions are made from a special material with higher strength values. Therefore, only use the original towing eyes and extensions.

If the vehicle is lifted at the front for towing, you need a second towing eye with extension.

The tow truck should bring one with it, or you can purchase one at an authorised Mercedes-Benz Trucks service centre.

Rear towing coupling

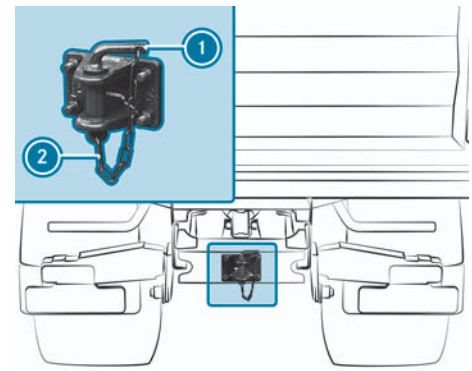

Use the rear towing coupling for manoeuvring, tow-starting and towing away.

- Disengage the catch ② on the coupling pin ①.
- Remove the coupling pin ①.
- Attach the tow bar.
- Push the coupling pin ① down through the eyelet of the tow bar.
- Hook the catch ② onto the coupling pin ① again.

Spring-loaded brake

Overview of the arrangement of the spring-loaded brake cylinders

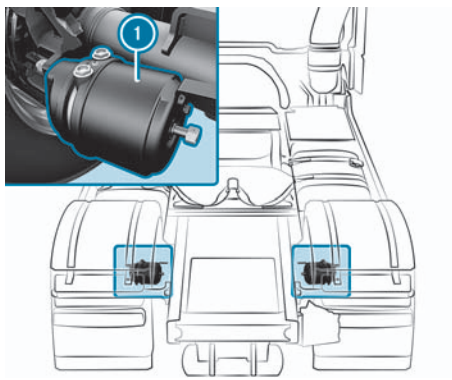

The arrangement of spring-loaded brake cylinders (1) on the front and/or rear axle depends on the axle type.

Arrangement of spring-loaded brake cylinders on front axle(s)

Axles	1	2
4x2	x [5, 6]	
4x4	x[5]	
6x2		
6x2 DNA	x[5]	
6x2/2	x	
6x2/4	x	
6x4	x [5, 6]	
6x6	x[5]	
8x4 ENA	x	
8x4/4		x
8x6/4	x[5]	x
8x8/4	x[5]	x

[5] Special equipment
[6] In conjunction with disc brakes

Arrangement of spring-loaded brake cylinders on rear axle(s)

Axles	1	2
4x2	x	
4x4	x	
6x2	x	x
6x2/2		x
6x2/4		x
6x4	x	x
6x6	x	x
8x4 ENA	x	x
8x4/4	x	x
8x6/4	x	x
8x8/4	x	x

Manually releasing and moving the spring-loaded brake cylinder to the drive position

Note

Damage to the spring-loaded brake cylinder

Using excessive torque when loosening or tightening the release screw can damage the spring-loaded brake cylinder.

- Loosen the release screw using a maximum of 70 Nm.
- Tighten the release screw using a maximum of 35 Nm.
- Do not use an impact wrench to loosen or tighten the release screw.

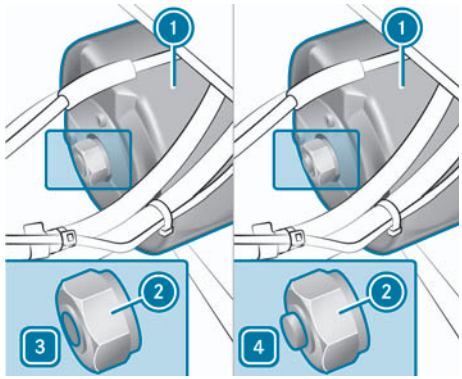

Spring-loaded brake cylinder with release screw and release indicator

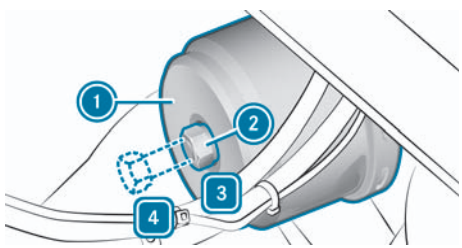

Spring-loaded brake cylinder with release screw

Spring-loaded brake cylinder

1 Spring-loaded brake cylinder

2 Release screw

3 Drive position

4 Released position

If there is insufficient supply pressure to release the parking brake, release all spring-loaded brake cylinders manually in the event of an emergency.

The vehicles may be fitted with different types of spring-loaded brake cylinders depending on the axle, e.g. spring-loaded brake cylinders with a release screw or with a release indicator.

- Use chocks to protect the vehicle against rolling away.
- **To release the spring-loaded brake cylinder:** Turn release screw 2 of the spring-loaded brake cylinder 1 to the left until it stops in release position 4.

Moving the spring-loaded brake cylinder to the drive position

Make sure to move all spring-loaded brake cylinders back into the drive position.

- Charge the brake system until the shut-off pressure is reached (→ Page 537).
- Use chocks to protect the vehicle against rolling away.
- Release the parking brake manually (→ Page 238).
- Turn release screw 2 of spring-loaded brake cylinder 1 clockwise to the drive position 3.
- Tighten the release screw 2.

Operating and road safety

General notes on wheels and tyres

Tyres are of particular importance to the operating and road safety of the vehicle. Check vehicle tyres regularly (→ Page 502).

Tyre load-bearing capacity, tyre speed rating and tyre types

Danger

Risk of injury through exceeding the specified tyre load-bearing capacity or the permissible speed rating

Exceeding the specified tyre load-bearing capacity may lead to tyre damage and the tyres bursting.

- ► Therefore, only use tyre types and sizes approved for your vehicle model.
- ► Observe the tyre load-bearing capacity rating and speed rating required for your vehicle.

A tyre dealer, a qualified specialist workshop or an authorised Mercedes-Benz Trucks Service Centre will be able to provide you with further information on the following:

- Tyre load-bearing capacity (LI, Load Index)
- Tyre speed rating
- Tyre age
- Causes and consequences of tyre wear
- Measures to be taken in the event of tyre damage
- Types of tyre for specific regions, areas of operation or conditions of vehicle use
- Interchangeability of tyres

In particular, observe legal regulations and the permissible tyre specifications for the country you are currently in. These requirements may stipulate a specific tyre type for your vehicle. In addition, the use of specific tyre types may be advisable for certain regions and areas of operation.

Notes on replacing tyres and retreaded tyres

Replacing tyres

If you are replacing the standard tyres of your vehicle, use only the tyre and wheel rim sizes approved for your vehicle model.

A tyre dealer, a qualified specialist workshop or an authorised Mercedes-Benz Trucks Service Centre will be able to provide you with further information. After replacing your tyres, carry with you the vehicle's type approval for the new tyre and wheel disk size as well as the manufacturer's certificate showing that the tyres may be used on the vehicle. Observe the legal requirements for the country you are currently in. An authorised Mercedes-Benz Trucks Service Centre can provide you with information on obtaining a manufacturer's certificate.

After replacing your tyres, it may be necessary for adjustments to be made to the control units. If necessary, have these adjustments carried out at a qualified specialist workshop.

Vehicles with power steering: If you change the mechanical axle stops, have the power steering taught-in again at a qualified specialist workshop.

Retreaded tyres

Daimler Truck AG recommends that you only use wheels and tyres that have been approved for Mercedes-Benz trucks.

Balancing tyres

Daimler Truck AG recommends that you only use clip-on and adhesive wheel balance weights that have been approved for Mercedes-Benz trucks to balance the tyres. Adding balancing granulate, balancing beads, or balancing gel to the tyres can damage the inliner of the tyre.

Notes on wheels with tyre pressure sensors

Tyre pressure monitoring system in the multimedia system

You can have the current tyre pressures, tyre temperatures, and the tyre pressure sensor battery state of charge displayed in the multimedia system.

- ► To do this, in the multimedia system, select the Suspension menu and the Tyres menu item.
- ► Then press the button, for example, in order to have the current tyre pressures displayed.

Note
Pressing and holding the button in the multimedia system displays the specified pressure set for the tyres.

The tyre pressure monitor has the following advantages:

- Assistance with regular tyre pressure monitoring
- Automatic warning in the event of tyre pressure loss

The tyre pressure monitoring system can only provide reliable warnings if the correct specified pressure for the tyres has been set on the on-board computer.

The tyre pressure monitoring system will detect an incorrect value, e.g. in the following cases:

- The vehicle is overloaded or incorrectly loaded.
- The vehicle is fitted with wheels that have a different tyre size and the specified pressure on the on-board computer has not been corrected.
- An incorrect specified pressure has been set on the on-board computer.

You are responsible for setting the correct tyre pressure. Always have the correct, specified pressure set on the on-board computer at a qualified specialist workshop.

If radio transmitting equipment (e.g. cordless headphones, two-way radios) is operated inside the vehicle or in the vicinity of the vehicle, this may interfere with the operation of the tyre pressure monitoring system.

The multimedia system will display "–" instead of the tyre pressure in the following cases:

- A tyre pressure sensor is temporarily malfunctioning, e.g. due to radio transmitting equipment
- Values from the tyre pressure sensor are not yet available

Wait a few minutes and/or move the vehicle out of the operating range of the radio transmitting equipment.

After tyre pressure sensors have been replaced, the vehicle must remain stationary for 15 minutes.

Afterwards, drive the vehicle at a speed of more than 30 km/h for at least ten minutes.

The tyre pressure values on the on-board computer may differ from those measured with a tyre pressure gauge. The tyre pressures shown by the on-board computer refer to those measured at sea level. At high altitudes, the tyre pressure indicated by tyre pressure gauges will be higher than those shown by the on-board computer. In this case, do not reduce the tyre pressure.

When the tyre temperature differs, different specified pressures may be shown for the tyres, e.g. due to exposure to sunlight.

Tyre pressure loss warning system

If the tyre pressure in at least one tyre drops, the on-board computer will display the warning in a yellow display message. A warning tone will also sound. Each tyre pressure value for which a loss of pressure has been determined will be highlighted in colour. When there is a notable loss of tyre pressure, the tyre pressure value will be shown in red.

Installation

You can identify wheels with tyre pressure sensors by a red ring on the tyre valve. Observe the mounting instructions when changing a tyre.

A tyre dealer, a qualified specialist workshop or an authorised Mercedes-Benz Trucks Service Centre will be able to provide you with further information.

Storage

The battery of a tyre pressure sensor for tyre pressure monitoring is activated automatically when it is installed. The tyre pressure sensor will then begin to transmit data periodically. If you store wheels with installed tyre pressure sensors, the service life of the tyre pressure sensor battery during road use is reduced. Therefore, tyre pressure sensors must only be installed shortly before the wheel is used.

Notes on sound changes or undesired handling characteristics

While driving, pay attention to vibrations, noises, and unusual handling characteristics, e.g. pulling to one side. This may indicate that the wheels or tyres are damaged. Reduce your speed if you suspect that a tyre is defective. Stop the vehicle as soon as possible to check the wheels and tyres for damage. Concealed tyre damage may also be causing the unusual handling characteristics. If you find no signs of damage, have the tyres and

wheels checked at a qualified specialist workshop.

Notes on regularly inspecting wheels and tyres

Tyres are of particular importance to the operating and road safety of the vehicle.

Therefore, regularly check the following points:

- Tyre condition
- Tyre age
- Tyre tread
- Tyre pressure

Tyre condition

Danger

Risk of injury through damaged tyres

Damaged tyres can cause tyre pressure loss.

► Check the tyres regularly for signs of damage, and replace any damaged tyres as soon as possible.

Before starting your journey, check the tyre condition for the following points:

- External damage
- Foreign objects in the tyre tread
- Foreign objects between the tyres (on vehicles with twin tyres)
- Cracks or bulges
- Uneven tread wear or excessive wear on one side

Tyre damage can be caused by the following:

- The operating conditions of the vehicle
- Tyre ageing
- Kerbs
- Foreign objects
- Insufficient or excessive tyre pressure
- Weather conditions and environmental factors
- Contact with oil, grease, fuel

Tyre age

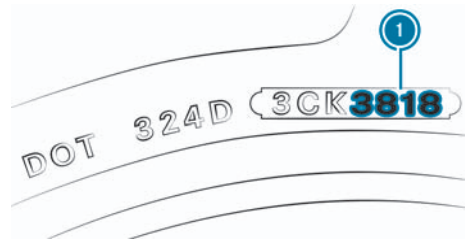

Tyres age, even if they are used infrequently or not at all. Operating and road safety diminish with the age of the tyres. For this reason, tyres more than six years old must be checked and, if necessary, replaced at a qualified specialist workshop. This also applies to the spare wheel. The date of manufacture (1) provides information about the age of a tyre. The first and second digits refer to the week of manufacture, starting with "01" for the first calendar week of the year. The third and fourth digits refer to the year of manufacture. For example, a tyre that is marked "3818" was manufactured in week 38 in 2018.

Tyre tread

Danger

Risk of aquaplaning due to insufficient tyre tread

Insufficient tyre tread will result in reduced tyre grip.

If the road surface is wet, the risk of aquaplaning will increase, in particular where the speed is not adapted to suit the conditions.

- You must regularly check the tyre tread depth and the condition of the tyre tread over the entire width on all tyres.
- For safety reasons, replace your tyres before reaching the legally prescribed limit for the minimum tread depth.

Danger

Risk of aquaplaning due to insufficient tyre tread

Depending on the depth of the water on the roadway, the vehicle may aquaplane.

- Avoid ruts and brake carefully.
- Change tyres if the tyre tread is insufficient.

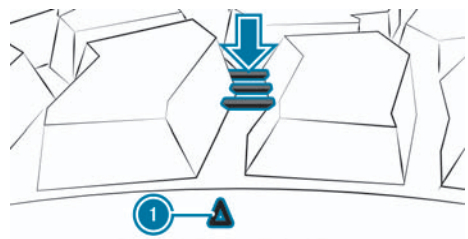

Tyre wear indicator

(1) Example: Tyre tread wear indicator

A specified minimum tread depth is a legal requirement for all tyres. Observe the legal requirements for the country you are currently in. The less tyre tread depth remaining, the poorer are the road adhesion and handling characteristics of the vehicle, particularly on wet or snow-covered roads. A tyre has reached the minimum tread depth when the tread wear indicator (arrow) is flush with the tyre tread.

Tyre pressure

In vehicles with a tyre pressure monitoring system, the current pressure of the individual tyres can be displayed in the multimedia system (→ Page 500).

Danger

Risk of accident due to insufficient or excessive tyre pressure

Tyres with too low or too high tyre pressure can burst or wearexcessively and/or unevenly.

In addition, the handling as well as steering and braking characteristics may be severely impaired.

- Observe the recommended tyre pressures and check the pressure of all tyres, including the spare, monthly, when the load changes, before embarking on a longer jour-

ney, and when operating conditions change (e.g., off-road driving).
- ► Adjust the tyre pressure as necessary.

Tyre pressure that is too low can have the following consequences:
- Severe heating
- Increased tyre wear
- Changed driving stability
- Increased fuel consumption

Tyre pressure that is too high can have the following consequences:
- Increased braking distance
- Poorer tyre traction
- Increased tyre wear

Danger

Risk of accident due to repeated pressure drop in the tyres

The wheels, valves or tyres could be damaged.

Too low a tyre pressure can lead to the tyres bursting.

- ► Examine the tyres for foreign objects.
- ► Check whether the tyre has a puncture or the valve has a leak.
- ► If you are unable to rectify the damage, contact a qualified specialist workshop.

Danger

Risk of injury from lowering the tyre pressure when the tyres are warm

The temperature and pressure of the tyre increase when the vehicle is in motion.

Lowering the tyre pressure on warm tyres can cause the tyres to burst.

- ► Do not lower the tyre pressure on warm tyres.
- ► Make sure you keep to the specified tyre pressure.

The tyre pressures are specified according to E.T.R.T.O. standards and may deviate from the manufacturer's specifications.

Before starting your journey, determine the specified tyre pressure and check the tyre pressures while the tyres are cold (→ Page 504).

Determining tyre pressure

- ► Observe the notes in the "Tyre pressure" section of "Regular checking of the wheels and tyres" (→ Page 502).

Use the correct tyre pressures for each axle on the vehicle.

Vehicles with ProCabin wheel trims: Observe the notes on removing the wheel trims (→ Page 469).

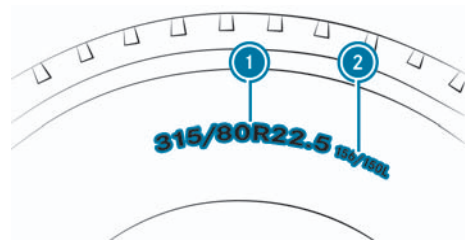

Example: Tyre size and load-bearing index

- ► Read off tyre size (1) and load-bearing index (2) on the tyre.

If the load index ② comprises two numbers, the first number before the "/" is for single tyres and the second number, after the "/", is for twin tyres.

- ► Determine the permissible axle load by checking the vehicle identification plate (→ Page 518).
- ► Select the tyre pressure table according to the tyre type (single tyres (→ Page 505) or twin tyres (→ Page 512)).
- ► Search tyre size ① in the tyre pressure table.
- ► Search load-bearing index ② which corresponds to the tyre type next to the tyre size in the tyre pressure table.
- ► Find the maximum permissible axle load in the tyre pressure table and read off the tyre pressure.

The tyre pressure changes by approximately 30 to 40 kPa (0.3 to 0.4°bar/ 4.4 to 5.8 psi) per 10°C change in air temperature. Bear this temperature-related change in tyre pressure in mind when checking tyre pressures indoors, where the temperature may be higher than the outside temperature.

Example:

- The outside temperature is approximately 0°C.
- The room temperature is approximately 20°C.
- Set the tyre pressure approximately 60 to 80 kPa (0.6 to 0.8 bar/8.7 to 11.6 psi) higher than that prescribed in the tyre pressure table.

Note

For specific tasks, e.g. for winter services, a maximum vehicle axle load rating for fitting approved attachments may be increased. In such cases, the speed of the vehicle is limited. The tyre pressure will then deviate from the information in the following tyre pressure table. It needs to be increased in accordance with the E.T.R.T.O. standard and the information provided by the tyre manufacturer.

Tyre pressure table for single tyres

Tyres 215/75 R 17.5

Single tyres/load index 135

Axle load	Tyre pressure		
kg	kPa	bar	psi
3200	575	5.75	83
3400	625	6.25	91
3600	675	6.75	98
3800	725	7.25	105
4000	775	7.75	112
4100	800	8.0	116
4,200	825	8.25	120
4300	850	8.5	123

Tyres 14 R 20

Single tyres/load index 160

Axle load	Tyre pressure		
kg	kPa	bar	psi
6300	500	5.0	72
6700	500	5.0	72
7100	525	5.25	76
7500	575	5.75	83

Tyre pressure table for single tyres

Axle load	Tyre pressure		
kg	kPa	bar	psi
8000	600	6.0	87
8500	650	6.5	94
9000	700	7.0	102

Tyres 14 R 20

Single tyres/load index 164

Axle load	Tyre pressure		
kg	kPa	bar	psi
6300	500	5.0	72
6700	500	5.0	72
7100	500	5.0	72
7500	525	5.25	76
8000	575	5.75	83
8500	625	6.25	91
9000	675	6.75	98
9500	700	7.0	102
10000	750	7.5	109

Tyres 14 R 20

Single tyres/load index 168

Axle load	Tyre pressure		
kg	kPa	bar	psi
6300	500	5.0	72
6700	500	5.0	72
7100	500	5.0	72
7500	525	5.25	76
8000	575	5.75	83
8500	600	6.0	87
9000	650	6.5	94
9500	700	7.0	102
10000	750	7.5	109
10500	800	8.0	116
11200	850	8.5	123

Tyres 365/85 R 20

Single tyres/load index 164

Axle load	Tyre pressure		
kg	kPa	bar	psi
6300	500	5.0	72
6700	500	5.0	72
7100	525	5.25	76
7500	575	5.75	83

Axle load	Tyre pressure		
kg	kPa	bar	psi
8000	625	6.25	91
8500	650	6.5	94
9000	700	7.0	102
9500	750	7.5	109
10000	800	8.0	116

Tyres 11 R 22.5

Single tyres/load index 148

Axle load	Tyre pressure		
kg	kPa	bar	psi
6300	850	8.5	123

Tyres 12 R 22.5

Single tyres/load index 152

Axle load	Tyre pressure		
kg	kPa	bar	psi
6300	750	7.5	109
6700	800	8.0	116
7100	850	8.5	123

Tyres 13 R 22.5
Single tyres/load index 154

Axle load	Tyre pressure		
kg	kPa	bar	psi
6300	700	7.0	102
6700	750	7.5	109
7100	800	8.0	116
7500	850	8.5	123

Tyres 13 R 22.5
Single tyres/load index 156

Axle load	Tyre pressure		
kg	kPa	bar	psi
6300	650	6.5	94
6700	725	7.25	105
7100	775	7.75	112
7500	825	8.25	120
8000	875	8.75	127

Tyres 275/70 R 22.5
Single tyres/load index 148

Axle load	Tyre pressure		
kg	kPa	bar	psi
6300	900	9.0	131

Tyres 275/70 R 22.5
Single tyres/load index 150

Axle load	Tyre pressure		
kg	kPa	bar	psi
6300	825	8.25	120
6700	900	9.0	131

Tyres 295/60 R 22.5
Single tyres/load index 150

Axle load	Tyre pressure		
kg	kPa	bar	psi
6300	850	8.5	123
6700	900	9.0	131

Tyres 295/80 R 22.5
Single tyres/load index 152

Axle load	Tyre pressure		
kg	kPa	bar	psi
6300	750	7.5	109

Axle load	Tyre pressure		
kg	kPa	bar	psi
6700	800	8.0	116
7100	850	8.5	123

Tyres 295/80 R 22.5
Single tyres/load index 154

Axle load	Tyre pressure		
kg	kPa	bar	psi
6300	675	6.75	98
6700	750	7.5	109
7100	800	8.0	116
7500	850	8.5	123

Tyres 305/70 R 22.5
Single tyres/load index 150

Axle load	Tyre pressure		
kg	kPa	bar	psi
6300	800	8.0	116
6700	850	8.5	123

Tyres 305/70 R 22.5
Single tyres/load index 152

Tyre pressure table for single tyres

Axle load	Tyre pressure		
kg	kPa	bar	psi
6300	775	7.75	112
6700	850	8.5	123
7100	900	9.0	131

Tyres 315/60 R 22.5

Single tyres/load index 152

Axle load	Tyre pressure		
kg	kPa	bar	psi
6300	775	7.75	112
6700	850	8.5	123
7100	900	9.0	131

Tyres 315/60 R 22.5

Single tyres/load index 154

Axle load	Tyre pressure		
kg	kPa	bar	psi
6300	725	7.25	105
6700	800	8.0	116
7100	850	8.5	123
7500	900	9.0	131

Tyres 315/60 R 22.5

Single tyres/load index 156

Axle load	Tyre pressure		
kg	kPa	bar	psi
6,300	700	7.0	102
6700	725	7.25	105
7100	775	7.75	112
7500	850	8.5	123
8000	900	9.0	131

Tyres 315/70 R 22.5

Single tyres/load index 154

Axle load	Tyre pressure		
kg	kPa	bar	psi
6300	725	7.25	105
6700	800	8.0	116
7100	850	8.5	123
7500	900	9.0	131

Tyres 315/70 R 22.5

Single tyres/load index 156

Axle load	Tyre pressure		
kg	kPa	bar	psi
6300	675	6.75	98
6700	725	7.25	105
7100	775	7.75	112
7500	850	8.5	123
8000	900	9.0	131

Tyres 315/70 R 22.5

Single tyres/load index 158

Axle load	Tyre pressure		
kg	kPa	bar	psi
6300	625	6.25	91
6700	675	6.75	98
7100	725	7.25	105
7500	775	7.75	112
8000	850	8.5	123
8500	900	9.0	131

Tyres 315/80 R 22.5

Single tyres/load index 154

Axle load	Tyre pressure		
kg	kPa	bar	psi
6300	675	6.75	98
6700	725	7.25	105
7100	775	7.75	112
7500	825	8.25	120

Tyres 315/80 R 22.5

Single tyres/load index 156

Axle load	Tyre pressure		
kg	kPa	bar	psi
6300	650	6.5	94
6700	700	7.0	102
7100	750	7.5	109
7500	800	8.0	116
8000	850	8.5	123

Tyres 315/80 R 22.5

Single tyres/load index 158

Axle load	Tyre pressure		
kg	kPa	bar	psi
6,300	625	6.25	91

Axle load	Tyre pressure		
kg	kPa	bar	psi
6700	675	6.75	98
7100	725	7.25	105
7500	775	7.75	112
8000	850	8.5	123
8500	900	9.0	131

Tyres 355/50 R 22.5

Single tyres/load index 154

Axle load	Tyre pressure		
kg	kPa	bar	psi
6300	725	7.25	105
6700	800	8.0	116
7100	850	8.5	123
7500	900	9.0	131

Tyres 355/50 R 22.5

Single tyres/load index 156

Axle load	Tyre pressure		
kg	kPa	bar	psi
6300	675	6.75	98

Axle load	Tyre pressure		
kg	kPa	bar	psi
6700	725	7.25	105
7100	775	7.75	112
7500	850	8.5	123
8000	900	9.0	131

Tyres 355/50 R 22.5

Single tyres/load index 158

Axle load	Tyre pressure		
kg	kPa	bar	psi
6,300	625	6.25	91
6700	675	6.75	98
7100	725	7.25	105
7500	775	7.75	112
8000	850	8.5	123
8500	900	9.0	131

Tyres 375/50 R 22.5

Single tyres/load index 156

Tyre pressure table for single tyres

Axle load	Tyre pressure		
kg	kPa	bar	psi
6300	675	6.75	98
6700	725	7.25	105
7100	775	7.75	112
7500	850	8.5	123
8000	900	9.0	131

Tyres 375/50 R 22.5

Single tyres/load index 158

Axle load	Tyre pressure		
kg	kPa	bar	psi
6,300	625	6.25	91
6700	675	6.75	98
7100	725	7.25	105
7500	775	7.75	112
8000	850	8.5	123
8500	900	9.0	131

Tyres 385/55 R 22.5

Single tyres/load index 158

Axle load	Tyre pressure		
kg	kPa	bar	psi
6,300	600	6.0	87
6700	650	6.5	94
7100	700	7.0	102
7500	750	7.5	109
8000	800	8.0	116
8500	850	8.5	123

Tyres 385/55 R 22.5

Single tyres/load index 160

Axle load	Tyre pressure		
kg	kPa	bar	psi
6,300	600	6.0	87
6700	625	6.25	91
7100	675	6.75	98
7500	725	7.25	105
8000	800	8.0	116
8500	850	8.5	123
9000	900	9.0	131

Tyres 385/55 R 22.5

Single tyres/load index 162

Axle load	Tyre pressure		
kg	kPa	bar	psi
6,300	550	5.5	80
6700	600	6.0	87
7100	625	6.25	91
7500	675	6.75	98
8000	725	7.25	105
8500	800	8.0	116
9000	850	8.5	123
9500	900	9.0	131

Tyres 385/65 R 22.5

Single tyres/load index 160

Axle load	Tyre pressure		
kg	kPa	bar	psi
6,300	600	6.0	87
6700	625	6.25	91
7100	675	6.75	98
7500	725	7.25	105
8000	800	8.0	116
8500	850	8.5	123
9000	900	9.0	131

Tyres 385/65 R 22.5

Single tyres/load index 162

Axle load	Tyre pressure		
kg	kPa	bar	psi
6,300	550	5.5	80
6700	600	6.0	87
7100	625	6.25	91
7500	675	6.75	98
8000	725	7.25	105
8500	800	8.0	116
9000	850	8.5	123
9500	900	9.0	131

Tyres 385/65 R 22.5

Single tyres/load index 164

Axle load	Tyre pressure		
kg	kPa	bar	psi
6,300	525	5.25	76
6700	550	5.5	80
7100	600	6.0	87
7500	625	6.25	91
8000	675	6.75	98
8500	750	7.5	109
9000	800	8.0	116
9500	850	8.5	123
10000	900	9.0	131

Tyres 425/65 R 22.5

Single tyres/load index 165

Axle load	Tyre pressure		
kg	kPa	bar	psi
6300	500	5.0	72
6700	500	5.0	72
7100	550	5.5	80
7500	575	5.75	83
8000	625	6.25	91
8500	675	6.75	98
9000	725	7.25	105
9500	775	7.75	112
10000	825	8.25	120

Tyres 495/45 R 22.5

Single tyres/load index 169

Axle load	Tyre pressure		
kg	kPa	bar	psi
6300	500	5.0	72
6700	500	5.0	72
7100	500	5.0	72
7500	500	5.0	72
8000	575	5.75	83
8500	625	6.25	91
9000	675	6.75	98
9500	725	7.25	105
10000	750	7.5	109
10500	800	8.0	116
11200	875	8.75	127
11500	900	9.0	131

Tyres 12 R 24

Single tyres/load index 160

Axle load	Tyre pressure		
kg	kPa	bar	psi
6300	550	5.5	80
6700	600	6.0	87
7100	625	6.25	91

Tyre pressure table for twin tyres

Axle load	Tyre pressure		
kg	kPa	bar	psi
7500	675	6.75	98
8000	725	7.25	105
8500	800	8.0	116
9000	850	8.5	123

Tyres 325/95 R 24

Single tyres/load index 162

Axle load	Tyre pressure		
kg	kPa	bar	psi
6300	525	5.25	76
6700	550	5.5	80
7100	600	6.0	87
7500	625	6.25	91
8000	700	7.0	102
8500	750	7.5	109
9000	800	8.0	116
9500	850	8.5	123

Tyres 325/95 R 24

Single tyres/load index 164

Axle load	Tyre pressure		
kg	kPa	bar	psi
6300	500	5.0	72
6700	550	5.5	80
7100	600	6.0	87
7500	625	6.25	91
8000	700	7.0	102
8500	750	7.5	109
9000	800	8.0	116
9500	850	8.5	123
10000	900	9.0	131

Tyres 325/95 R 24

Single tyres/load index 167

Axle load	Tyre pressure		
kg	kPa	bar	psi
6300	500	5.0	72
6700	500	5.0	72
7100	525	5.25	76
7500	575	5.75	83
8000	625	6.25	91
8500	675	6.75	98

Axle load	Tyre pressure		
kg	kPa	bar	psi
9000	725	7.25	105
9500	775	7.75	112
10000	825	8.25	120
10500	875	8.75	127

Tyre pressure table for twin tyres

Tyres 14 R 20

Twin tyres/load index 157

Axle load	Tyre pressure		
kg	kPa	bar	psi
9500	500	5.0	72
10000	500	5.0	72
10500	500	5.0	72
11500	500	5.0	72
12000	500	5.0	72
12300	500	5.0	72
12600	500	5.0	72
13000	525	5.25	76
13400	550	5.5	80

Axle load	Tyre pressure		
kg	kPa	bar	psi
16000	675	6.75	98

Tyres 14 R 20

Twin tyres/load index 160

Axle load	Tyre pressure		
kg	kPa	bar	psi
9500	500	5.0	72
10000	500	5.0	72
10500	500	5.0	72
11500	500	5.0	72
12000	500	5.0	72
12300	500	5.0	72
12600	500	5.0	72
13000	500	5.0	72
13400	525	5.25	76
16000	650	6.5	94

Tyres 14 R 20

Twin tyres/load index 165

Axle load	Tyre pressure		
kg	kPa	bar	psi
9500	500	5.0	72
10000	500	5.0	72
10500	500	5.0	72
11500	500	5.0	72
12000	500	5.0	72
12300	500	5.0	72
12600	500	5.0	72
13000	500	5.0	72
13400	500	5.0	72
16000	625	6.25	91
20600	850	8.5	123

Tyres 11 R 22.5

Twin tyres/load index 145

Axle load	Tyre pressure		
kg	kPa	bar	psi
9500	675	6.75	98
10000	725	7.25	105
10500	750	7.5	109
11500	850	8.5	123

Tyres 12 R 22.5

Twin tyres/load index 148

Axle load	Tyre pressure		
kg	kPa	bar	psi
9500	600	6.0	87
10000	650	6.5	94
10500	700	7.0	102
11500	775	7.75	112
12000	800	8.0	116
12300	825	8.25	120
12600	850	8.5	123

Tyres 12 R 22.5

Twin tyres/load index 149

Axle load	Tyre pressure		
kg	kPa	bar	psi
9500	575	5.75	83
10000	625	6.25	91
10500	650	6.5	94
11500	725	7.25	105
12000	775	7.75	112
12300	800	8.0	116

Tyre pressure table for twin tyres

Axle load	Tyre pressure		
kg	kPa	bar	psi
12600	825	8.25	120
13000	850	8.5	123

Tyres 13 R 22.5

Twin tyres/load index 150

Axle load	Tyre pressure		
kg	kPa	bar	psi
9500	575	5.75	83
10000	625	6.25	91
10500	650	6.5	94
11500	725	7.25	105
12000	775	7.75	112
12300	800	8.0	116
12600	825	8.25	120
13000	850	8.5	123
13400	875	8.75	127

Tyres 13 R 22.5

Twin tyres/load index 151

Axle load	Tyre pressure		
kg	kPa	bar	psi
9500	550	5.5	80
10000	600	6.0	87
10500	625	6.25	91
11500	700	7.0	102
12000	725	7.25	105
12300	775	7.75	112
12600	775	7.75	112
13000	825	8.25	120
13400	850	8.5	123

Tyres 275/70 R 22.5

Twin tyres/load index 145

Axle load	Tyre pressure		
kg	kPa	bar	psi
9500	725	7.25	105
10000	750	7.5	109
10500	800	8.0	116
11500	900	9.0	131

Tyres 295/55 R 22.5

Twin tyres/load index 145

Axle load	Tyre pressure		
kg	kPa	bar	psi
9500	725	7.25	105
10000	750	7.5	109
10500	800	8.0	116
11500	900	9.0	131

Tyres 295/60 R 22.5

Twin tyres/load index 147

Axle load	Tyre pressure		
kg	kPa	bar	psi
9500	675	6.75	98
10000	700	7.0	102
10500	750	7.5	109
11500	850	8.5	123
12000	875	8.75	127
12300	900	9.0	131

Tyres 295/80 R 22.5

Twin tyres/load index 148

Axle load	Tyre pressure		
kg	kPa	bar	psi
9500	600	6.0	87
10000	650	6.5	94
10500	700	7.0	102
11500	775	7.75	112
12000	800	8.0	116
12300	825	8.25	120
12600	850	8.5	123

Tyres 295/80 R 22.5

Twin tyres/load index 149

Axle load	Tyre pressure		
kg	kPa	bar	psi
9500	575	5.75	83
10000	625	6.25	91
10500	650	6.5	94
11500	725	7.25	105
12000	775	7.75	112
12300	800	8.0	116
12600	825	8.25	120
13000	850	8.5	123

Tyres 305/70 R 22.5

Twin tyres/load index 148

Axle load	Tyre pressure		
kg	kPa	bar	psi
9500	600	6.0	87
10000	650	6.5	94
10500	700	7.0	102
11500	775	7.75	112
12000	800	8.0	116
12300	825	8.25	120
12600	850	8.5	123

Tyres 305/70 R 22.5

Twin tyres/load index 150

Axle load	Tyre pressure		
kg	kPa	bar	psi
9500	600	6.0	87
10000	625	6.25	91
10500	675	6.75	98
11500	750	7.5	109
12000	800	8.0	116
12300	825	8.25	120
12600	850	8.5	123
13000	875	8.75	127
13400	900	9.0	131

Tyres 315/45 R 22.5

Twin tyres/load index 145

Axle load	Tyre pressure		
kg	kPa	bar	psi
9500	725	7.25	105
10000	750	7.5	109
10500	800	8.0	116
11500	900	9.0	131

Tyres 315/60 R 22.5

Twin tyres/load index 148

Axle load	Tyre pressure		
kg	kPa	bar	psi
9500	650	6.5	94
10000	675	6.75	98
10500	725	7.25	105

Tyre pressure table for twin tyres

Axle load	Tyre pressure		
kg	kPa	bar	psi
11500	825	8.25	120
12000	850	8.5	123
12300	875	8.75	127
12600	900	9.0	131

Tyres 315/60 R 22.5

Twin tyres/load index 150

Axle load	Tyre pressure		
kg	kPa	bar	psi
9500	600	6.0	87
10000	625	6.25	91
10500	675	6.75	98
11500	750	7.5	109
12000	775	7.75	112
12300	825	8.25	120
12600	850	8.5	123
13000	875	8.75	127
13400	900	9.0	131

Tyres 315/70 R 22.5

Twin tyres/load index 148

Axle load	Tyre pressure		
kg	kPa	bar	psi
9500	600	6.0	87
10000	650	6.5	94
10500	700	7.0	102
11500	775	7.75	112
12000	800	8.0	116
12300	825	8.25	120
12600	850	8.5	123

Tyres 315/70 R 22.5

Twin tyres/load index 150

Axle load	Tyre pressure		
kg	kPa	bar	psi
9500	600	6.0	87
10000	625	6.25	91
10500	675	6.75	98
11500	750	7.5	109
12000	800	8.0	116
12300	825	8.25	120
12600	850	8.5	123
13000	875	8.75	127
13400	900	9.0	131

Tyres 315/80 R 22.5

Twin tyres/load index 150

Axle load	Tyre pressure		
kg	kPa	bar	psi
9500	575	5.75	83
10000	600	6.0	87
10500	650	6.5	94
11500	725	7.25	105
12000	750	7.5	109
12300	775	7.75	112
12600	800	8.0	116
13000	825	8.25	120
13400	850	8.5	123

Tyres 12 R 24

Twin tyres/load index 156

Axle load	Tyre pressure		
kg	kPa	bar	psi
9500	500	5.0	72
10000	500	5.0	72
10500	500	5.0	72
11500	575	5.75	83
12000	600	6.0	87
12300	625	6.25	91
12600	625	6.25	91
13000	675	6.75	98
13400	675	6.75	98
16000	850	8.5	123

Tyres 325/95 R 24

Twin tyres/load index 160

Axle load	Tyre pressure		
kg	kPa	bar	psi
9500	500	5.0	72
10000	500	5.0	72
10500	500	5.0	72
11500	500	5.0	72
12000	525	5.25	76
12300	550	5.5	80
12600	550	5.5	80
13000	575	5.75	83
13400	600	6.0	87
16000	725	7.25	105

Tyres 325/95 R 24

Twin tyres/load index 162

Axle load	Tyre pressure		
kg	kPa	bar	psi
9500	500	5.0	72
10000	500	5.0	72
10500	500	5.0	72
11500	500	5.0	72
12000	500	5.0	72
12300	525	5.25	76
12600	550	5.5	80
13000	575	5.75	83
13400	600	6.0	87
16000	725	7.25	105

Tyres 325/95 R 24

Twin tyres/load index 164

Axle load	Tyre pressure		
kg	kPa	bar	psi
9500	500	5.0	72
10000	500	5.0	72
10500	500	5.0	72
11500	500	5.0	72
12000	500	5.0	72
12300	500	5.0	72
12600	500	5.0	72
13000	525	5.25	76
13400	550	5.5	80
16000	700	7.0	102

Engine identification plate

Engine identification plate

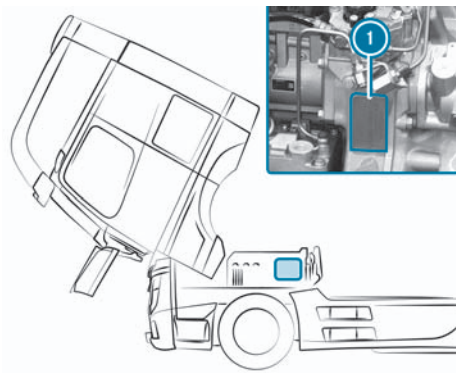

OM 471 engine (example)

The engine type plate ① is located at the rear left of the crankcase viewed in the direction of travel.

The engine type plate ① shows the following information:

- Manufacturer
- Engine type
- Engine model designation
- Engine number

Note

In vehicles with the OM 460 engine, the engine type plate is located on the right of the crankcase viewed in the direction of travel, .

Vehicle identification plate/axle loads

Vehicle identification plate and Vehicle Identification Number (VIN)

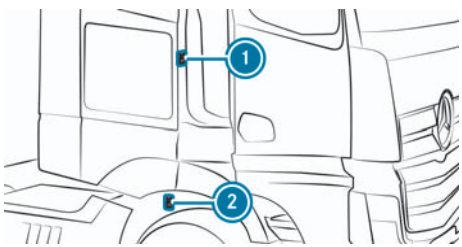

Example: Vehicle Identification Number (VIN) and vehicle identification plate

The vehicle identification plate ① is located in the door frame on the co-driver's side. The Vehicle Identification Number (VIN) ② is stamped on the longitudinal frame member in the right wheel well.

Vehicles for Gulf States: The Vehicle Identification Plate ① is located in the door frame on the driver's side.

Vehicle identification plate

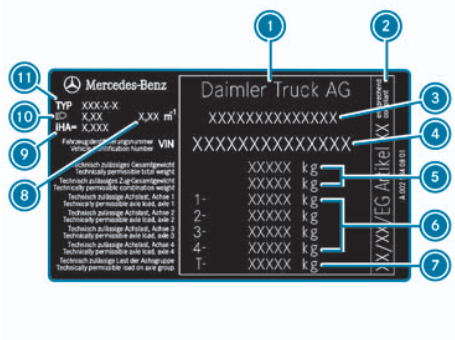

EU vehicle identification plate (example)

Information on the vehicle identification plate

① Vehicle manufacturer

② Approval for extended cabs

③ EU general operating permit number (only in certain countries)

④ Vehicle Identification Number (VIN)

5. Maximum permissible gross vehicle weight (kg)
   Permissible gross vehicle combination weight (kg)
6. Permissible axle loads of axles 1 to 4 (kg)
7. Permissible load of axle group T (kg)
8. Flue gas coefficient
9. Rear axle ratio
10. Basic headlamp setting
11. Vehicle model or vehicle model designation

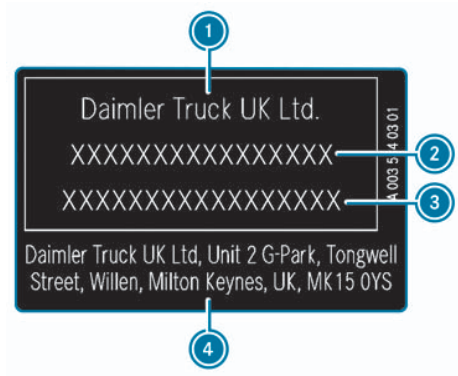

United Kingdom vehicle identification plate (example)

Information on the vehicle identification plate

1. Licensee
2. Type approval number
3. Vehicle identification number (VIN)
4. Licensee address

You will find the technically permissible gross vehicle combination weight on the vehicle identification plate or in the COC documents. Note that, in ADR mode, the technically permissible gross vehicle combination weight is determined by the continuous braking effect of the vehicle. You will find this value in your ADR certification.

If you require further assistance, consult an authorised Mercedes-Benz Trucks Service Centre.

Radio regulations

Wireless vehicle components

Only for EU and EFTA countries and countries that recognise the EU manufacturer's declaration of conformity

CE

The following note applies to all wireless components of the vehicle and the information systems and communications equipment integrated in the vehicle:

The manufacturers of the wireless components declare that all wireless components installed in the vehicle comply with Directive 2014/53/EU.

The full text of the EU Declarations of Conformity are available at the following internet address:

https://manuals.daimlertruck.com/truckownermanuals/conformity

For Israel only

It is prohibited to make any change to a vehicle-installed radio component that could affect the wireless specifications of the device, including software changes, replacement of the original antenna, or adding the option to connect the device to an external antenna, without first obtaining approval from the Communica-tions Ministry, because of concern about wireless interference.

For the United Kingdom only

UK CA

The following note applies to all wireless components of the vehicle and the information systems and communications equipment integrated in the vehicle:

The manufacturers of the radio components declare that all radio equipment installed in the vehicle is in compliance with the relevant statutory requirements. The full texts of the declarations of conformity are available at the following web address:

https://manuals.daimlertruck.com/truckownermanuals/conformity

Importer

Mercedes-Benz Trucks UK Limited
Delaware Drive, Tongwell
Milton Keynes MK15 8BA
Großbritannien

Importer of Mercedes-Benz spare parts

Mercedes-Benz Parts Logistics
Delaware Drive, Tongwell
Milton Keynes MK15 8BA
Großbritannien

For Brazil only

ANATEL

Information about radio equipment in the vehicle:

These systems are not protected against harmful interference and must not cause interference in properly-approved systems.

For Jamaica only

All vehicle-installed radio components have been Type Approved by SMA.

For Russia only:

The manufacturers of the wireless components installed in the vehicle hereby declare that all wireless components installed in the vehicle comply with the technical regulations for two-way radios. You can obtain further information from an authorised Mercedes-Benz Trucks Service Centre.

For Thailand only:

Telecommunications equipment in this vehicle is in compliance with the requirements of the National Broadcasting and Telecommunications Commission (NBTC).

Radar sensor ARS4-A:

1) The telecommunications equipment and this device comply with the standard or requirements of the National Broadcasting and Telecommunications Commission (NBTC).

2) When in use, this two-way radio system emits electromagnetic radiation that meets the health and safety standards of the National Telecommunications Commission (NTC).

Radio operating permits

Information on radio approvals and radio approval numbers is available at the following Internet address:

https://manuals.daimlertruck.com/truckownermanuals/conformity

Notes on the MirrorCam system

Observe the following when using radio equipment in the vehicle:

The distance between the two-way radio aerial and the MirrorCam system camera arm must be at least 85 cm.

Type of wireless application and specification in accordance with 2014/53/EU

Note

Not all two-way radio systems may be available in your vehicle. This depends on the equipment chosen or the national version.

Component	Service	Transmission frequency band	Transmission output
Telematics platform (CTP3)	4G LTE	Band 1 Band 3 Band 4 Band 5 Band 7 Band 8 Band 12 Band 14 Band 17 Band 18 Band 19 Band 20 Band 25 Band 26 Band 28 Band 39 Band 40 Band 41 Band 66	0.25 W (Power Class 3)

Component	Service	Transmission frequency band	Transmission output
	3G UMTS/HSDPA/HSUPA	Band 1 Band 5 Band 8	0.3 W (Power Class 3)
	2G GSM/GPRS/EDGE	GSM 850 MHz E-GSM 900 MHz	2 W (Power Class 4)
	2G GSM/GPRS/EDGE	DCS 1800 MHz PCS 1900 MHz	1 W (Power Class 1)
		EDGE GSM 850 MHz EDGE E-GSM 900 MHz EDGE DCS 1800 MHz EDGE PCS 1900 MHz	0,5 W (Power Class 3)
	Wi-Fi (IEEE802.11b)	2.4 GHz-band	50 mW
	Wi-Fi (IEEE802.11g/n/ax)	2.4 GHz-band	25 mW
	Wi-Fi (IEEE802.11a/n/ac/ax)	5 GHz-band	15 mW
	Bluetooth®	2.4 GHz-band	5 mW
Telematics platform (CTP2019)	4G LTE	Band I 2100 MHz Band III 1800 MHz Band V 850 MHz Band VII 2600 MHz	0.25 W (Power Class 3)
	3G UMTS/HSDPA/HSUPA	Band I 2100 MHz Band II 1900 MHz Band V 850 MHz Band VIII 900 MHz	0.25 W (Power Class 3)
	2G GSM/GPRS/EDGE	GSM 850 MHz E-GSM 900 MHz	2 W (Power Class 4)

Radio regulations

Component	Service	Transmission frequency band	Transmission output
		DCS 1800 MHz PCS 1900 MHz	1 W (Power Class 1)
	Wi-Fi (IEEE802.11b)	2.4 GHz-band	50 mW
	WIFI (IEEE802.11g/n)	2.4 GHz-band	25 mW
	Bluetooth®	2.4 GHz-band	2.5 mW
Telematics platform (CTP2019 from 10/2022)	4G LTE	Band I 2100 MHz Band III 1800 MHz Band VII 2600 MHz Band VIII 900 MHz Band XX 800 MHz Band XXVIII 700 MHz Band XXXVIII 2600 MHz	0.25 W (Power Class 3)
	3G UMTS/HSDPA/HSUPA	Band I 2100 MHz Band VIII 900 MHz	0.25 W (Power Class 3)
	2G GSM/GPRS/EDGE	E-GSM 900 MHz DCS 1800 MHz	2 W (Power Class 4)
	Wi-Fi (IEEE802.11b)	2.4 GHz-band	50 mW
	WIFI (IEEE802.11g/n)	2.4 GHz-band	25 mW
	Bluetooth®	2.4 GHz-band	2.5 mW
Radar sensor system (ARS3-A, ARS4-A, ARS4-B, ARS4-C)	Vehicle-interval radar	76 – 77 GHz-Band	3.16 W
Radar sensor system (SRR2, model L2C0055TR)	Lateral radar	76 – 77 GHz-Band	1 W
Radar sensor system	Corner radar	76 – 77 GHz-Band	0.11 – 0.92 W

Component	Service	Transmission frequency band	Transmission output
(CR5TPCC)			
Radio (Daimler TCC Touch*, 1-DIN TCC MID*)	Bluetooth®	2402 - 2480 MHz	≤ 2.5 mW (4 dBm)
Electronic ignition lock (EIS, transmitter key)	Short-range wireless technologies	433 MHz-band	10 mW
Tyre pressure monitoring system (TPM)	Short-range wireless technologies	433 MHz-band	10 mW
Android Black Box (STG AP)	Bluetooth®	1925–1975 MHz	25.6 dBm
		2402 - 2480 MHz	5.5 dBm
	WiFi	1715 - 1780 MHz	25.6 dBm
		2412 - 2484 MHz	18.5 dBm
		5150–5350 MHz	17.5 dBm
		5470–5725 MHz	17.5 dBm
	GPRS 900	880 - 914 MHz	33 dBm
		885 - 910 MHz	25.5 dBm
	GPRS 1800	837 - 857 MHz	25.5 dBm
		1710–1785 MHz	30 dBm
Instrument cluster (Connect5)	WIFI 5 GHz	5.725 – 5.875 GHz-band	< 25 mW
		5.150 – 5.350 GHz-band	< 200 mW
	WIFI 2.4 GHz	2.400 – 2.4835 GHz-band	< 20 mW

Radio regulations

Component	Service	Transmission frequency band	Transmission output
	Bluetooth®	2.400 – 2.4835 GHz-band	< 10 mW
* 1-DIN TCC LOW does not have Bluetooth® functionality.			

Operating fluids

Notes on operating fluids

Danger

Risk of injury from hazardous operating fluids

Operating fluids may be poisonous and harmful to your health.

- Observe the text on the original containers when using, storing, or disposing of operating fluids.
- Always store operating fluids in their closed original containers.
- Always keep operating fluids away from children.

Note

Damage to major assemblies caused by additives

Using additives in approved operating fluids can damage major assemblies.

- Do not mix additives with the operating fluids.

Note

Pollution of the environment due to irresponsible disposal of operating fluids

Incorrectly disposing of operating fluids can cause considerable damage to the environment.

- Dispose of operating fluids in an environmentally responsible manner.

Operating fluids include:

- Fuels
- Lubricants
- Coolant
- Additives for exhaust gas after-treatment, e.g. AdBlue®
- Windscreen washer fluid
- Air conditioning system refrigerants

Only use products approved by Daimler Truck°AG. Damage caused by the use of unsuitable operating fluids is not covered by the warranty.

Products approved by Daimler Truck AG are clearly marked on the containers.

You can obtain information about approved operating fluids and container designations from an authorised Mercedes-Benz Trucks Service Centre or online at:

https://bevo.mercedes-benz-trucks.com/

Notes on engine oils

Note

Damage to the engine due to unauthorised engine oil quality

To prevent damage:

- Only use engine oils of a quality level that is approved for your vehicle in accordance with the Mercedes-Benz Trucks Specifications for Operating Fluids.

Observe the notes on operating fluids (→ Page 527).

The quality of the engine oil used is of decisive importance for the engine's functionality and service life. Daimler Truck AG continually approves engine oils based on demanding tests in line with the latest technological standards.

Engine oils with a higher quality standard have a favourable effect on the following factors:

- Oil change interval period
- Engine wear
- Fuel consumption
- Exhaust gas emissions

Oil change

Note

Increased wear due to mixing different grades of oil

If engine oils of different quality grades are mixed, the intervals for changes of engine oil will be shorter than with engine oils of the same quality.

- ▶ Only mix engine oils of different quality grades in exceptional cases.
- ▶ Adjust the specification of the engine oil to a lower quality level.

Note

Engine damage due to the use of engine oil with inadequate temperature properties

The engine oil used does not have adequate temperature properties. This can lead to damage to the engine.

- ▶ Select the SAE classification (viscosity) of the engine oil based on the average outside temperature according to the season.
- ▶ The SAE classification of the engine oil does not match the ambient temperature: Change the engine oil in good time, especially before the onset of the cold season.

Oil change intervals are dependent on the following factors:

- Vehicle operating conditions
- The quality of the engine oil used
- The fuel type
- The fuel grade

Note

The oil change intervals are shortened depending on the fuel type and fuel grade (sulphur content).

Select the SAE classification (viscosity) of the engine oil according to the outside temperature. You can find information about SAE classifications and outside temperature ranges in the Mercedes-Benz Trucks specifications for operating fluids.

The maximum oil change interval is only achieved with engine oils of a particularly high quality grade. The on-board com-

puter automatically displays when the next oil change is due.

Filling or topping up engine oil

Note

Damage caused by topping up too much engine oil

Excess engine oil can damage the engine or catalytic converter.

- ▶ Have excess engine oil removed at a qualified workshop.

Daimler Truck AG recommends that you only refill with engine oils of the same quality grade and SAE classification as was used the last time the oil was changed.

Check the oil level in the on-board computer (→ Page 169) before you top up the engine oil (→ Page 436).

Miscibility of engine oils

If you mix engine oils, you reduce the advantages of high-quality engine oils.

Engine oils are differentiated according to the following points:

- Engine oil brand
- Quality level (specification)
- SAE classification (viscosity)

If, in exceptional cases, the engine oil filled with is not available, top up with another engine oil approved for Mercedes-Benz Trucks.

Setting the oil quality

When the instrument cluster displays the symbol and you refill the displayed oil filling capacity, observe the following:

- If you are topping up or filling up with engine oil of a lower grade, set the lower quality level in menu Status, menu item Maintenance of the multimedia system under Service products.
- If you are topping up with engine oil of a better quality, do not enter the better quality level.

Transmission oils

General notes

Note

Damage to the transmission from mineral-based transmission oil

The transmission may be damaged when changing from a synthetic to a mineral-based transmission oil.

- ▶ Before you change the transmission oil, check whether a mineral-based transmission oil is permitted. You can find information at an authorised Mercedes-Benz Trucks Service Centre.

Observe the notes on operating fluids (→ Page 527).

The drive axles and the transmission are filled with a high-quality synthetic oil at the factory.

The planetary hub reduction axles are filled with mineral oil.

Information on the usability of transmission oils can be found in the

Mercedes-Benz Trucks Specifications for Operating Fluids.

Transmission oil quality

You can check the quality grade of the transmission oil used in the multimedia system in menu Status, menu item Maintenance under Service products.

Notes on coolant

Danger

Risk of fire and injury from antifreeze agent

If antifreeze agent comes into contact with hot component parts in the engine compartment, it may ignite.

- ► Allow the engine to cool down before you top up the antifreeze agent.
- ► Make sure that no antifreeze agent spills out next to the filler opening.
- ► Thoroughly clean the antifreeze agent from component parts before starting the vehicle.

Observe the notes on operating fluids (→ Page 527).

A coolant that ensures anti-corrosion/antifreeze protection and other important protective effects is added ex works.

The coolant is a mixture of water and corrosion inhibitor/antifreeze agent.

The corrosion inhibitor/antifreeze agent in the coolant has the following properties:

- Heat dissipation
- Anti-corrosion protection
- Cavity seal (protection against pitting)
- Antifreeze protection
- Increases the boiling point

Leave the coolant in the engine cooling system all year round even in countries with high outside temperatures.

Check the anti-corrosion/antifreeze agent concentration in the coolant every six months.

Only use approved corrosion inhibitor/antifreeze agents.

If you replace the coolant, make sure that the coolant contains 50 % corrosion inhibitor/antifreeze. This corresponds to antifreeze protection down to -37 °C.

Do not exceed a concentration of 55% (antifreeze protection down to a temperature of around -45°C). Heat dissipation and antifreeze protection may otherwise deteriorate.

In the event of coolant loss, do not just refill with water, but also proportionally with an approved corrosion inhibitor/antifreeze agent.

The water used in coolant must meet specific requirements, which are often met by drinking water. Have the water treated if the water quality is inadequate.

Mix the water and the corrosion inhibitor/antifreeze agent together externally of the coolant circuit before filling.

Avoid mixing different anti-corrosion/antifreeze agents.

Notes on refrigerant

Your vehicle's climate control system is filled with refrigerant R134a and contains fluorinated greenhouse gas.

The warning label for the refrigerant type used is located behind the maintenance flap.

Note

Damage due to incorrect refrigerant or refrigerant compressor oil

If the incorrect refrigerant or refrigerant compressor oil (PAG oil) is used, this can damage the climate control system.

- Only use refrigerant R134a and the PAG oil approved by Daimler Truck°AG for your vehicle.
- Do not mix the approved PAG oil with another PAG oil.

Maintenance work, such as topping up the refrigerant or replacing components, must be carried out only by a qualified specialist workshop. All applicable regulations and SAE standard J639 must be complied with.

Refrigerant information label

Information on refrigerant information label

1. Symbols for hazards and service information
2. Refrigerant filling capacity
3. CO equivalent of the refrigerant used
4. Applicable standards
5. PAG oil part number
6. GWP (global warming potential) of the refrigerant used
7. Refrigerant type

The symbols (1) indicate the following:

- Possible dangers
- The performance of maintenance work at a qualified specialist workshop

Notes on fuel grade

Danger

Risk of fire from fuel mixture

If you mix diesel fuel with petrol, the flash point of the fuel mixture is lower than that of pure diesel fuel.

- Do not refuel diesel engines with petrol.
- Do not mix petrol with diesel fuel.

Even small amounts of the wrong fuel could result in damage to the fuel system, engine and exhaust gas aftertreatment system.

Note

Damage to the exhaust gas aftertreatment system for vehicles with diesel particulate filters

If you use diesel fuel with a sulphur content that is too high, the exhaust gas aftertreatment system may be damaged.

- In countries without sulphur-free diesel fuel, refuel using only low-

sulphur diesel fuel with a sulphur content of less than 50 ppm.

Note

Refuel only with commercially available vehicle diesel fuel that conforms to the European standard EN 590 (or equivalent national fuel standards).

Compatibility labels for all vehicles with a diesel engine

For diesel engines, you will find the compatibility labels on the tensioning strap of the fuel tank and on the fuel dispenser or on the pump nozzle of the filling station.

- **B7:** For diesel fuel with a maximum of 7% fatty acid methyl ester FAME (biodiesel fuel) by volume
- **XTL:** for paraffinic diesel fuel in accordance with DIN EN 15940

Information on low outside temperatures

Refuel your vehicle with as much winter diesel fuel as possible at the beginning of winter.

Before switching to winter diesel fuel, the fuel tank must be as empty as possible. When first refuelling with winter diesel fuel, only refuel using a small amount, e.g. to reserve level. The next time you refuel, you can fill the fuel tank normally again.

Further information on fuel is available at the following locations:

- Filling stations
- Qualified specialist workshops

Information on diesel fuels in accordance with EN 590

Notes

Danger

Risk of fire or explosion from fuel

Fuels are highly flammable.

- ► Fire, naked flames, smoking and a formation of sparks must be avoided.
- ► Before refuelling, switch off the vehicle and, if present, the auxiliary heating.

Note

Malfunctions in the fuel supply due to contaminated fuel

Impurities may enter the fuel system from drums or canisters when refuelling. This can cause malfunctions in the fuel supply and in the fuel system.

- ► Before refuelling, filter the fuel if it is taken from drums or canisters.

Note

Damage to the engine and the exhaust system due to excessively high a sulphur content in the fuel

Fuels can have different levels of sulphur content. A high fuel sulphur content accelerates the ageing process of the engine oil and can damage the engine and exhaust system.

► Use fuels with a low sulphur content.

BlueTec® 6 vehicles:

Only refuel with commercially available sulphur-free diesel fuel that conforms to European standard EN 590, as of 2010 with a max. sulphur content of 0.001% by weight (10 ppm).

The following fuel types are not permitted:

- Sulphurous fuel with a sulphur content over 0.001% by weight
- Marine diesel fuel
- Aviation turbine fuel
- Heating oils
- Biodiesel fuels in accordance with DIN EN 14214 (FAME (fatty acid methyl ester) and UCOME (used cooking oil methyl ester)

These fuel types cause irreversible damage to the engine and BlueTec® 6 exhaust gas after-treatment system and significantly reduce the expected service life.

BlueTec® 4 vehicles and BlueTec® 5 vehicles:

Diesel fuel must comply with European standard EN 590. This allows the engines to attain the specified output as well as the legally prescribed emission levels of the Euro IV and Euro V standard.

Using fuels with a sulphur content above 0.005% by weight (50 ppm) will reduce the life expectancy of the engine and exhaust system.

The following fuel types are not permitted:

- Sulphurous fuel with a sulphur content greater than 0.05% by weight (500 ppm)
- Marine diesel fuel
- Aviation turbine fuel
- Heating oils
- Biodiesel fuel FAME (fatty acid methyl ester) > 7% by vol.
- Biodiesel fuel UCOME (Used Cooking Oil Methyl Ester)

Vehicles without BlueTec® exhaust gas aftertreatment

Only refuel with commercially available sulphur-free diesel fuel that conforms to European standard EN 590 as of 2010 or a comparable national fuel standard.

This enables the engines to achieve both the specified performance and the emission levels legally prescribed by the Euro III standard.

The following fuel types are not permitted:

- OM 460: Sulphurous fuel with a sulphur content above 0.2% by weight (2000 ppm)
- OM 473: Sulphurous fuel with a sulphur content above 0.1% by weight (1000 ppm)

- Marine diesel fuel
- Aviation turbine fuel
- Heating oils
- Biodiesel fuel FAME (fatty acid methyl ester) > 7% by vol.
- Biodiesel fuel UCOME (Used Cooking Oil Methyl Ester)

For vehicles without BlueTec® exhaust gas aftertreatment, the sulphur content of the fuel is set to the value customary in the country of delivery. If you refuel with diesel fuel with a different sulphur content, set the new sulphur content value in the multimedia system using menu Status, menu item Maintenance under Service products. If you do not know the sulphur content of the diesel fuel used, set the lower value for the sulphur content in the multimedia system.

Some countries have diesel fuels with a different sulphur content. Diesel fuels with a lower sulphur content are sold in some countries under the designation "Euro diesel".

You can find information about current country-specific sulphur content at an authorised Mercedes-Benz Trucks service centre or in the Mercedes-Benz Trucks Specifications for Operating Fluids (→ Page 527).

Diesel fuels at low temperatures

Danger

Risk of fire and explosion from igniting fuel

If parts of the fuel system heat up, fuel may escape and ignite. Depending on the type of damage, fuel may only escape when the engine is running.

- ▶ Do not heat up parts of the fuel system.
- ▶ Contact a qualified workshop to have the fault rectified.

At very low outside temperatures, paraffin may separate from the diesel fuel resulting in inadequate flow characteristics.

To prevent malfunctions, diesel fuel with improved flow characteristics is available in the winter months.

You can normally use winter diesel fuel without problems at the outside temperatures expected in the country where it is on sale.

The vehicle can be equipped with a fuel preheating system. The fuel preheating system heats the fuel and thus improves its flow characteristics.

Fuel additives

Note

Damage due to the mixing of fuel additives

If fuel additives are added to the diesel fuel or FAME fatty acid methyl ester, this may lead to malfunctions, catalytic converter damage and/or engine damage.

- ▶ Do not mix fuel additives.

Note

Damage to the fuel system due to deterioration of the lubrication qualities of the diesel fuel

Using petrol or petroleum will impair the lubrication qualities of the diesel fuel. This can damage the fuel system.

- ▶ Do not mix petrol or kerosene with diesel fuel.

Information about alternative diesel fuels in accordance with DIN EN 15940

Observe the notes on operating fluids (→ Page 527).

Alternative diesel fuels according to DIN EN 15940 can be produced from the following resources:

- Hydrotreated vegetable oils (HVO)
- Biomass (BtL biomass to liquid)
- Natural gas (GtL gas to liquid)
- Coal (CtL coal to liquid)

Alternative diesel fuels in accordance with DIN EN 15940 can be used in the following engines:

- OM 470
- OM 471
- OM 473
- OM 936

You can operate your vehicle with pure alternative diesel fuels in accordance with DIN EN 15940 and in a mixture with conventional diesel fuels.

Notes on AdBlue®

It may be improper or punishable in some countries to operate a vehicle that uses no AdBlue® or one that does not comply with the specifications of these operating instructions.

Note

Paintwork damage caused by AdBlue®

If AdBlue® comes into contact with painted or aluminium surfaces when refuelling, these surfaces may be attacked.

- ▶ Immediately rinse the affected surfaces with plenty of water.

If the AdBlue® tank is still filled with enough AdBlue®, pressure compensation may occur when the tank cap is opened. This may cause AdBlue® to leak. Therefore, unscrew the tank cap of the AdBlue® tank with care.

AdBlue® is a non-flammable, non-toxic, colourless, odourless, water-soluble liquid.

When you open the AdBlue® tank, small amounts of ammonia vapour may escape. Ammonia vapours have a pungent odour and irritate the following body parts in particular:

- Skin
- Mucous membranes
- Eyes

This can cause a burning sensation in the eyes, nose and throat as well as coughing and watering eyes.

Do not inhale any escaping ammonia vapours. Only fill the AdBlue® tank in well-ventilated areas.

AdBlue® must not come into contact with skin, eyes or clothing or be swallowed. Keep AdBlue® away from children.

If you do come into contact with AdBlue®, observe the following:

- Wash AdBlue® off skin immediately with soap and water.
- If you get AdBlue® in your eyes, rinse them immediately and thoroughly with clean water. Seek medical attention immediately.
- If you swallowed AdBlue®, rinse your mouth immediately with water and drink plenty of water.
  Seek medical attention immediately.
- Immediately change clothes that have been soiled by AdBlue®.

High outside temperatures

AdBlue® may decompose if it heats to over 50°C over an extended period of time, e.g. due to direct sunlight. This creates ammonia vapour.

Low outside temperatures

AdBlue® freezes at a temperature of approximately -11°C. The vehicle's AdBlue® supply system is equipped with a fully automatic heating system. Winter operation is therefore also ensured for temperatures below -11 °C.

Additives, tap water

Note

Damage caused by mixing additives with AdBlue® or from diluting AdBlue®

The BlueTec® exhaust gas aftertreatment can be destroyed by additives in AdBlue® and by the dilution of AdBlue®.

- ▶ Only use AdBlue® in accordance with ISO 22241.
- ▶ Do not mix additives.
- ▶ Do not dilute AdBlue®.

Storage

Tanks made of the following materials are not suitable for storing AdBlue®:

- Aluminium
- Copper
- Copper alloys
- Non-alloy steel
- Galvanised steel

If AdBlue is stored in these types of container, constituents of these metals may dissolve and damage the BlueTec® exhaust gas after-treatment system beyond repair.

Only use tanks made of the following materials for storing AdBlue®:

- Cr-Ni steel according to DIN EN 10 088-1/2/3
- MoCrNi steel according to DIN EN 10 088-1/2/3
- Polypropylene
- Polyethylene

Waste disposal

Note

Environmental pollution caused by environmentally irresponsible disposal

To prevent damage:

- Dispose of AdBlue® in an environmentally responsible manner.

When disposing of AdBlue®, observe the legal requirements for the country you are currently in.

Purity

Note

Damage and malfunctions due to impurities in AdBlue®

Contamination of AdBlue® leads to increased emission values, catalytic converter damage, engine damage and malfunctions in the AdBlue® exhaust gas aftertreatment system.

- Do not refill the AdBlue® tank with pumped-out AdBlue® .
- Avoid any impurities in AdBlue®.

Ensure that AdBlue® is pure to avoid malfunctions in the BlueTec® exhaust gas aftertreatment.

If you pump AdBlue® out of the tank during a repair, for example, do not refill the tank with this same fluid. Otherwise the purity of the liquid is no longer guaranteed.

Operating data

Compressed-air system

Minimum pressure of the compressed-air system

Minimum pressures	Pressure
Brake circuit 1	6.8 bar
Brake circuit 2	6.8 bar
Brake circuit 3	5.5 bar
Transmission circuit/ clutch circuit	5.5 bar
Spring-loaded brake cylinder release pressure	6.8 bar

Supply pressures of compressed-air system

Supply pressures	Pressure
Service brake	10.5 bar ... 13.6 bar
Air suspension	10.5 bar ... 15.5 bar
External source of compressed air (charging the compressed-air system)	11.0 bar ... 12.5 bar
Remaining pressure circuits	7.0 bar ... 8.7 bar

Engine

Engine speeds OM 936 (7698 cm³)

	Speed
Idle speed	≈ 600 rpm
Engine brake (operating range)	Around 1,000 rpm ... 3,000 rpm
Speed range at maximum engine torque	Around 1,200 rpm ... 1,600 rpm
Engine speed at maximum engine output	≈ 1,800 rpm

Engine speeds of OM 460 (12,816 cm³)

	Speed
Idle speed	Around 560 rpm ... 800 rpm
Engine brake (operating range)	Around 1,500 rpm ... 2,500 rpm
Engine speed at maximum engine output	≈ 1,600 rpm

Engine speeds of OM 470 (10,667 cm³) and OM 471 (12,809 cm³)

	Speed
Idle speed	Around 500 rpm ... 550 rpm
Engine brake (operating range)	Around 1,000 rpm ... 2,300 rpm
Speed range at maximum engine torque	≈ 1,100 rpm
Engine speed at maximum engine output	Around 1,600 rpm ... 1,800 rpm

Engine speeds of OM 473 (15569 cm³)

	Speed
Idle speed	≈ 500 rpm
Engine brake (operating range)	Around 1,000 rpm ... 2,300 rpm
Speed range at maximum engine torque	≈ 1,100 rpm
Engine speed at maximum engine output	≈ 1,600 rpm

Operating temperature

Operating temperature OM 936

Operating mode	Temperature
Normal operation	Around 80 °C ... 100 °C
Maximum permissible coolant temperature during operation	≤ 103 °C
Automatically reduced engine output	> 103 °C

Operating temperature OM 460

Operating mode	Temperature
Normal operation	Around 80 °C ... 95 °C
Maximum permissible coolant temperature during operation	≤ 110 °C
Automatically reduced engine output	> 105 °C

Operating temperature of OM 470, OM 471, OM 473

Operating mode	Temperature
Normal operation	Around 85 °C ... 105 °C
Maximum permissible coolant temperature during operation	≤ 110 °C
Automatically reduced engine output	> 110 °C

Tyre pressure

Tyres	Pressure
Tyre pressure table for single tyres	See the "Wheels and tyres" section
Tyre pressure table for twin tyres	See the "Wheels and tyres" section
Permissible difference in pressure between tyres on an axle	20 kPa (0.2 bar/3 psi)

Tyres	Pressure
Maximum permissible air pressure for inflating tyres	1000 kPa (10.0 bar/145 psi)

Wheel nut tightening torques

The tightening torques for the wheel nuts are identical for light-alloy and steel wheels.

Wheel nut tightening torques

Wheels	Torque
Wheel nuts with pressure plate (hub centring) M22x1.5 for 20", 22.5" and 24" rims, 10 hole mounting	600 Nm
Wheel nuts with pressure plate (hub centring) M18 x 1.5 for 17.5" wheel rims, 6-hole mounting	400 Nm
Wheel nuts with conical spring washers	450 Nm
Connecting flange with twin tyres 14.00 R 20	450 Nm
Wheel nut covers	60 Nm

Spring-loaded brake cylinder release torque/release pressure

Spring-loaded brake cylinder	Torque/ pressure
Release torque of the release screw	≤ 70 Nm
Tightening torque of the release screw	≤ 35 Nm
Release pressure (with external source of compressed air)	≥ 6.5 bar

Level control system

	Pressure
Fill the air suspension via connection 28 on the electronic air processing unit	≤ 12.5 bar

Compressed-air reservoir

Information on the compressed-air reservoir

Information for the initial purchaser and other users

Supporting documentation in accordance with Directive 2009/105/EC of the European Parliament and of the Council and in accordance with the technical standard EN 286-2.

Accompanying documentation

a–	The reservoir is only intended for use in compressed-air systems and auxiliary equipment on motor vehicles and their trailers, and is only to be used to hold compressed air.
b–	For the purposes of identification, the reservoir is marked with a factory no. and the manufacturer of the reservoir, as well as the key operating data and the CE mark, see the identification plate or inscriptions directly on the wall of the reservoir.
c–	The reservoir is manufactured with a "Declaration of conformity" in accordance with Article 12 of Directive 2009/105/EC.
d–	The reservoir is to be secured to the vehicle by tensioning straps (clamps). If the reservoir is an aluminium reservoir, contact surfaces must be designed to inhibit corrosion or mechanical damage. Tensioning straps are to be positioned in such a way that they do not come into contact with the base connecting seams; the reservoir is not to be subjected to any stress that would jeopardise operating safety.

Compressed-air reservoir

	Coatings applied to aluminium reservoirs must not contain lead, and the top coat of paint must only be applied over a suitable primer coat. Steel threaded connections for aluminium reservoirs must have a corrosion-proof coating.
–	Aluminium reservoirs are only to be cleaned using non-alkaline cleaning agents.
–	The interior of the reservoir must be visible through the threaded connections.
–	The reservoir must be emptied at regular intervals to prevent the accumulation of condensation (pull ring on drain valve at the lowest point of the reservoir).
e–	The reservoir requires no maintenance if item d is complied with.
f–	No welding, heat treatment or other operation relevant to safety is to be performed on the pressure-bearing walls of the reservoir (casing, base, threaded rings).
g–	The internal pressure of the reservoir may exceed the maximum operating pressure Ps by no more than 10% for a brief period.
Daimler Truck AG	

Compressed-air reservoir identification plate

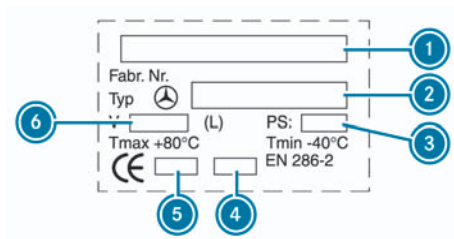

Aluminium reservoir

1. Manufacturer
2. MB part number
3. Maximum operating pressure (bar)
4. Year of construction
5. Testing establishment code number
6. Volume (litres)

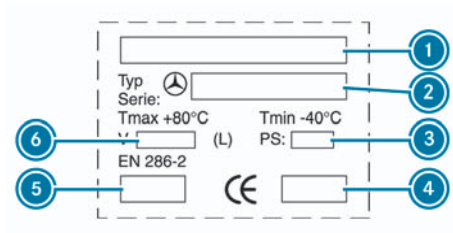

Steel reservoir

1. Manufacturer
2. MB part number
3. Maximum operating pressure (bar)
4. Testing establishment code number
5. Year of construction
6. Volume (litres)

Notes on display messages

Safety instructions

If you ignore warning/indicator lamps or display messages, you will not be able to identify failures and malfunctions in components or systems. Driving/braking characteristics may be affected and the reliability and road safety of your vehicle may be impaired.

- ► Have the affected system checked and repaired at a qualified specialist workshop.
- ► Always pay attention to warning lights and display messages, and follow the appropriate remedial measures.

Operating information, fault messages and warnings will automatically be displayed in a display message by the instrument cluster. As well as the display message, an indicator lamp may light up in the status area (→ Page 170).

Depending on the priority of the event, the instrument cluster will display the display message in different colours:

- For a fault/message with low priority, the instrument cluster will display a **grey** display message.
  Observe the instructions in the display message.
  Continuing the journey is possible.
- For a fault/message with medium priority, the instrument cluster will display a **yellow** display message.
  The instrument cluster will also display a yellow display message for special operating statuses, e.g. if the tyre pressure of a tyre is too low.
  The instrument cluster will also display a yellow display message if maintenance work due has not been performed, for example.
  Observe the instructions in the display message.
- For a high-priority fault, the instrument cluster will display a **red** display message.
  The instrument cluster will show a red display message if the brake reservoir pressure is low, for example.
  Observe the instructions in the display message.
  Park the vehicle in a safe place as soon as possible and notify a qualified specialist workshop.

BlueTec® exhaust gas aftertreatment/diesel particulate filter

Display messages	Possible causes/consequences and ▶ solutions
Rotational speed increase	An automatic engine speed increase reduces hydrocarbon deposits in the catalytic converter. The message disappears automatically when the process is complete. Vehicles with diesel particulate filter: This function is not a regeneration of the diesel particulate filter.
Regeneration locked	Diesel particulate filter regeneration is disabled and the fill level of the diesel particulate filter is raised. ▶ Deactivate the regeneration lockout as soon as possible to enable automatic regeneration of the diesel particulate filter (→ Page 356).
Manual regeneration not possible	Additional text : Requirements for manual regeneration have not been fulfilled. Please observe Operating Instructions. Diesel particulate filter regeneration is not possible. At least one requirement has not been fulfilled. ▶ Observe the activation conditions and requirements for manual regeneration of the diesel particulate filter (→ Page 357).
Diesel part. filter: fluid level raised	Additional text : Start regeneration Please observe Operating Instructions The indicator lamp also lights up on the instrument cluster. Regeneration of the diesel particulate filter is necessary. Depending on the driving operation, do the following within the next four hours: ▶ Deactivate regeneration lockout and continue driving on a motorway or overland until the indicator lamp goes out. or ▶ Start manual regeneration (→ Page 357).

Display messages	Possible causes/consequences and ▶ solutions
Diesel particle filter full	Additional text : Start regeneration immediately Please observe the Operating Instructions The indicator lamp also lights up on the instrument cluster. Regeneration of the diesel particulate filter is necessary. Depending on the driving mode, perform the following within the next 30 minutes: ▶ Deactivate regeneration lockout and continue driving on a motorway or overland until the indicator lamp goes out. or ▶ Start manual regeneration (→ Page 357).
Diesel particle filter full	Additional text : Start regeneration immediately Please observe the Operating Instructions Indicator lamp in the instrument cluster also flashes. Regeneration of the diesel particulate filter is necessary immediately and it can be started for the last time manually. ▶ Start manual regeneration straight away (→ Page 357). The diesel particulate filter may otherwise only be able to be cleaned or replaced at a qualified specialist workshop.
Diesel particle filter full	Additional text : Stop vehicle. Consult service centre. Regeneration is no longer possible. The indicator lamp also lights up on the instrument cluster. The diesel particulate filter has reached its soot load limit. Engine performance will be reduced and manual regeneration will no longer be possible. ▶ Clean the diesel particulate filter as soon as possible or have it replaced.
AdBlue reserve	Additional text : Please top up AdBlue. The AdBlue® level has dropped to approximately 10%. ▶ Top up AdBlue® tank immediately (→ Page 368). ◁ **Vehicles with BlueTec® 4/BlueTec® 5:** Engine power may be reduced. ◁ **Vehicles with BlueTec® 6:** Engine power may be reduced and speed may be limited to approximately 20 km/h.

BlueTec® exhaust gas aftertreatment/diesel particulate filter

Display messages	Possible causes/consequences and ▶ solutions
AdBlue reserve	**Vehicles with BlueTec® 6** Additional text [▸≡]: Please top up with AdBlue. Risk of loss of engine output The [⇨] indicator lamp in the status area also lights up. The AdBlue® level has dropped to approximately 7.5%. ▶ Top up AdBlue® tank immediately (→ Page 368). ◁ Otherwise, engine power may be reduced and speed may be limited to approximately 20 km/h.
AdBlue very low	**Vehicles with BlueTec® 6** Additional text [▸≡]: Please top up with AdBlue. Loss of engine output after stopping The [⇨] indicator lamp in the status area also lights up. The AdBlue® level has dropped to approximately 2.5%. ▶ Top up AdBlue® tank immediately (→ Page 368). ◁ Otherwise, engine power will be reduced the next time the vehicle comes to a standstill and speed may be limited to approximately 20 km/h.
AdBlue empty	Additional text [▸≡]: Please top up AdBlue. The AdBlue® level has dropped to approximately 0%. Engine output will be reduced the next time the vehicle is started. ▶ Adapt your driving style accordingly. ▶ Top up AdBlue® tank immediately (→ Page 368).
AdBlue empty	**Vehicles with BlueTec® 6** Additional text [▸≡]: Please top up with AdBlue Risk of speed limit The [⇨] indicator lamp in the status area also lights up. The AdBlue® level has dropped to approximately 0%. Engine power is reduced. ▶ Adapt your driving style accordingly. ▶ Top up AdBlue® tank immediately (→ Page 368). ◁ Otherwise, engine power will be reduced the next time the vehicle comes to a standstill and speed may be limited to approximately 20 km/h.

Display messages	Possible causes/consequences and ▶ solutions
Engine power reduced	Additional text [▸≡]: Please top up AdBlue. The AdBlue® level has dropped to approximately 0%. Engine power is reduced. ▶ Adapt your driving style accordingly. ▶ Top up AdBlue® tank immediately (→ Page 368).
Engine output reduced	**Vehicles with BlueTec® 6** Additional text [▸≡]: Please top up with AdBlue Risk of speed limit The [⇨] indicator lamp in the status area also lights up. The AdBlue® level has dropped to approximately 2.5%. Engine power is reduced. ▶ Adapt your driving style accordingly. ▶ Top up AdBlue® tank immediately (→ Page 368). ◁ Otherwise, engine power may be reduced and speed may be limited to approximately 20 km/h.
Speed limit	**Vehicles with BlueTec® 6** Additional text [▸≡]: Please top up AdBlue. The [⇨] indicator lamp in the status area also lights up. The AdBlue® level has dropped to approximately 0%. The speed is limited to approximately 20 km/h. ▶ Adapt your driving style accordingly. ▶ Top up AdBlue® tank immediately (→ Page 368).

Trailers/semitrailers

Display messages	Possible causes/consequences and ▶ solutions
 Coupling level reached	In addition to the display message, the indicator lamp in the status area lights up. The semitrailer has been detected during reversing. The fifth-wheel coupling is unlocked ▶ Continue the coupling procedure by reversing slowly.
 Wheel brake overload	Additional text : Adapt your driving style. The temperature of one of the drum/disk brakes on the trailer/semitrailer is too high. The drum/disk brake may overheat. **Warning** **Risk of accident due to high temperatures at the trailer/semitrailer brake** The vehicle's driving and braking characteristics may change. Observe the notes in the separate operating instructions provided by the trailer/semitrailer manufacturer. ▶ Continue your journey carefully. ▶ Shift to a lower gear. ▶ Brake the vehicle with the continuous brake. ▶ Depress the brake pedal in addition only if the braking power of the continuous brake is not sufficient. ▶ Have the brake system checked at a qualified specialist workshop.
 Check tyre pressure	The tyre pressure is too low in at least one of the trailer/semitrailer tyres. **Warning** **Risk of accident due to insufficient or excessive tyre pressure in a trailer/semitrailer tyre** The vehicle's driving and braking characteristics may change. Also observe the notes in the separate Operating Instructions provided by the trailer/semitrailer manufacturer. ▶ Stop the vehicle without steering or braking suddenly. Pay attention to the traffic conditions. ▶ Check the tyre pressure and correct it if necessary.

Display messages	Possible causes/consequences and ▶ solutions
Starting-off aid active	The starting-off aid on the trailer/semitrailer is switched on. ▶ Observe the separate Operating Instructions provided by the trailer/semitrailer manufacturer.
Additional axle raised	The leading/trailing axle on the trailer/semitrailer has been raised. ▶ Observe the separate Operating Instructions provided by the trailer/semitrailer manufacturer.
Note trailer height.	In addition to the display message, the indicator lamp in the instrument cluster also comes on. The level control for the trailer/semitrailer is outside the driving level. **Warning** **Risk of accident due to an inappropriate trailer/semitrailer height** The vehicle's driving and braking characteristics may change. Observe the maximum headroom clearance of underpasses. Observe the notes in the separate operating instructions provided by the trailer/semitrailer manufacturer. ▶ Set the level control for the trailer/semitrailer to driving level; see the separate operating instructions provided by the trailer/semitrailer manufacturer.

Display messages	Possible causes/consequences and ▶ solutions
Turn signal faulty (Example)	The turn signal light on the trailer/semitrailer is faulty. ▶ Replace the corresponding bulb; see the separate Operating Instructions issued by the trailer/semitrailer manufacturer.
Open semitrailer coupling.	In addition to the display message, the indicator lamp in the status area lights up. If the instrument cluster displays the warning and a warning tone sounds, the fifth-wheel kingpin was detected during coupling/uncoupling and the monitored fifth-wheel coupling is not locked. **Danger** **Risk of accident due to damaged or unlocked fifth-wheel coupling** You could lose the semitrailer. ▶ Always ensure that the fifth-wheel coupling is undamaged and has been locked after coupling up. ▶ When uncoupling: Continue with the process. ▶ When coupling: Check the locking mechanism on the monitored fifth-wheel coupling. or ▶ Couple the semitrailer again.
Driving level below coupling level	In addition to the display message, the indicator lamp in the status area lights up. If the instrument cluster shows the warning and a warning tone sounds, the semitrailer is no longer detected when reversing. The monitored fifth-wheel coupling is not yet engaged.

Display messages	Possible causes/consequences and ▶ solutions
	Danger **Risk of accident due to damaged or unlocked fifth-wheel coupling** You could lose the semitrailer. ▶ Always ensure that the fifth-wheel coupling is undamaged and has been locked after coupling up. ▶ Correct the semitrailer level until the instrument cluster shows the Coupling level reached display message.
Check semitrailer coupling.	Additional text : Check semitrailer coupling: open if needed. In addition to the display message, the indicator lamp in the status area lights up. If the instrument cluster shows the warning and a warning tone sounds, the monitored fifth-wheel coupling is locked and the semitrailer is not detected. **Danger** **Risk of accident due to damaged or unlocked fifth-wheel coupling** You could lose the semitrailer. ▶ Always ensure that the fifth-wheel coupling is undamaged and has been locked after coupling up.
Check semitrailer coupling.	In addition to the display message, the indicator lamp in the status area lights up. If the instrument cluster shows the warning and a warning tone sounds, the monitored fifth-wheel coupling is locked and the semitrailer is not detected. **Danger** **Risk of accident due to damaged or unlocked fifth-wheel coupling** You could lose the semitrailer. ▶ Always ensure that the fifth-wheel coupling is undamaged and has been locked after coupling up. or

Display messages	Possible causes/consequences and ▶ solutions
	▶ Couple the semitrailer again.
Semitrailer coupling sensor faulty	In addition to the display message, the indicator lamp in the status area lights up. The sensor on the fifth-wheel coupling is faulty. The state of the monitored fifth-wheel coupling has not been correctly detected. See the supplementary text regarding malfunction/remedy, e.g. Clean sensor **Danger** **Risk of accident due to damaged or unlocked fifth-wheel coupling** You could lose the semitrailer. ▶ Always ensure that the fifth-wheel coupling is undamaged and has been locked after coupling up. ▶ Clean the sensor; see the manufacturer's Operating Instructions.

Lighting system

Display messages	Possible causes/consequences and ▶ solutions
 	All the vehicle's exterior lighting is electronically monitored. If the display message is displayed, a bulb has failed. The display message contains information on the fault location and how to rectify the fault, e.g. Replace light bulb. Left dipped beam faulty or Visit workshop. Left dipped beam faulty. If the "Replace light bulb" display message is displayed: ▶ Replace the respective bulb (→ Page 116). ◁ If you do not switch off the lighting system before you change the bulb, you must reset the display message afterwards. To do so, switch the relevant lighting or, if necessary, the vehicle off and on again. or ▶ Consult a qualified workshop in the case of LED lights. If the "Consult a workshop" display message is displayed: ▶ Visit a qualified workshop.

Operating fluids and maintenance

Display messages	Possible causes/consequences and ▶ solutions
	The washer fluid level in the washer fluid reservoir has fallen to approximately one litre. ▶ Top up the washer fluid reservoir (→ Page 432).
Air filter	Additional text: 12/08/2020 3000 km (example) A maintenance appointment is due. ▶ Schedule the service appointment at a qualified specialist workshop.
Air filter Maintenance due (Example)	In addition to the display message, the indicator lamp in the status area lights up. A maintenance appointment is due. ▶ Have the maintenance work carried out at a qualified specialist workshop.
Engine Maintenance due immediately (Example)	In addition to the display message, the indicator lamp in the status area lights up. A maintenance due date has been significantly exceeded. This can result in damage to the vehicle and the major assemblies. It may also result in increased wear. ▶ Have the maintenance work carried out immediately at a qualified specialist workshop.
Fully refuel the main tank first	The main tank has run dry. On vehicles with an additional fuel tank, you must observe the filling order, otherwise the fuel display does not correctly show the current fuel level and the on-board computer does not show the correct range. ▶ First, completely fill up the main tank on the left of the vehicle (→ Page 365). ▶ Then fill up the additional fuel tank.
	The fuel has dropped to the reserve level. ▶ Refuel the vehicle.

Brakes

Display messages	Possible causes/consequences and ▶ solutions
Driving and braking characteristics changed	Additional text : Visit workshop. In addition, the warning lamp lights up on the instrument cluster. The vehicle's brake system is malfunctioning. **Danger** **Risk of an accident due to a brake system malfunction** If the brake system is malfunctioning, braking characteristics may be impaired. ▶ Continue your journey carefully. ▶ Have the brake system checked at a qualified specialist workshop as soon as possible.
Increased brake force and pedal travel	Additional text : Stop vehicle. Contact service centre. In addition, the warning lamp lights up on the instrument cluster. The vehicle's brake system is malfunctioning. Full braking power may not be available. **Warning** **Risk of accident due to increased pedal travel** The vehicle's driving and braking characteristics may change. The operating and road safety of the vehicle is jeopardised. ▶ Carefully bring the vehicle to a standstill and park it safely. ▶ Apply the parking brake. ▶ Consult a qualified specialist workshop.

Display messages	Possible causes/consequences and ▶ solutions
 Brakes, axle 1 Maintenance due immediately (Example)	In addition to the display message, the indicator lamp lights up, supplemented by in the status area. The maintenance work due has not been performed. The wear limits of the brake linings and/or brake disks have been exceeded. **Danger** **Risk of accident due to impaired braking power** When the brake pads have reached their wear limit, the braking power may be impaired. ▶ Continue your journey carefully. ▶ Have the brake system checked at a qualified specialist workshop as soon as possible. ▶ Visit a qualified workshop.
 Brake pads completely worn	Additional text : Visit workshop. The wiring for the trailer/semitrailer is interrupted or the maintenance work due has not been performed on the trailer/semitrailer. The wear limit of the brake linings and/or brake disks of the trailer/semitrailer have been exceeded. **Danger** **Risk of accident due to impaired braking power** When the brake pads have reached their wear limit, the braking power may be impaired. ▶ Continue your journey carefully. ▶ Have the brake system checked at a qualified specialist workshop as soon as possible. **Note** Observe the notes in the separate operating instructions provided by the trailer/semitrailer manufacturer. ▶ Have the trailer/semitrailer wiring checked immediately at a qualified specialist workshop.

Display messages	Possible causes/consequences and ▶ solutions
	or ▶ Have the brake linings on the trailer/semitrailer replaced immediately at a qualified specialist workshop.
 Braking effect limited	Additional text ▸≡: Adapt your driving style. The temperature of one of the disk brakes on the towing vehicle is too high. **Warning** **Risk of accident due to high disc brake temperatures** The vehicle's driving and braking characteristics may change. The disk brake may overheat. ▶ Continue your journey carefully. ▶ Shift to a lower gear. ▶ Brake the vehicle with the continuous brake. ▶ Depress the brake pedal in addition only if the braking power of the continuous brake is not sufficient.
 Engage parking brake.	Proximity Control Assist has stopped the vehicle. The parking brake was not applied and one of the following actions was performed: • The driver left the driver's seat. • The driver's door was opened. • The vehicle was switched off. **Danger** **Risk of accident if the driver's seat is vacated with Proximity Control Assist active** The distance control assistant function is no longer keeping the vehicle stationary. The parked vehicle may roll away. You may endanger yourself and others. ▶ Apply the parking brake.

Brakes

Display messages	Possible causes/consequences and ▶ solutions
 Engage parking brake.	The parking brake has not been applied. The vehicle was parked with a gear engaged and the parking brake released. After the engine has been switched off, the transmission automatically shifts to neutral. **Danger** **Risk of accident due to the vehicle rolling on its own** The parked vehicle may roll away. You may endanger yourself and others. ▶ Apply the parking brake.
 Engage parking brake.	Vehicles with parameterisable special module (PSM): Parking brake not applied. The parking brake was not applied before switching on the electric power take-off system. **Danger** **Risk of accident due to the vehicle rolling on its own** The parked vehicle may roll away. You may endanger yourself and others. ▶ Apply the parking brake before switching on the power take-off.

Compressed-air system

Display messages	Possible causes/consequences and ▶ solutions
 Condensation in compressed-air reservoir	The compressed-air dryer is malfunctioning. ▶ Have the compressed-air dryer checked at a qualified specialist workshop.
 Transmission/clutch reserve pressure too low	The reserve pressure in the transmission/clutch is too low. **Danger** **Risk of accident due to low supply pressure** In the event of pressure loss or if the supply pressure in the transmission/clutch circuit is too low, you will no longer be able to shift gears properly. ▶ Park the vehicle as soon as it is safe to do so. ▶ Apply the parking brake. ▶ Let the engine run until the display message goes out and the reserve pressure has reached an adequate level. ▶ If the malfunction occurs regularly, have the compressed-air system checked at a qualified specialist workshop.
 Brake reservoir pressure in circuit 1 too low (Example)	In addition, the (!) warning lamp lights up on the instrument cluster. The supply pressure in brake circuit 1 (1) or 2 (2) is too low. If the supply pressure in the spring-loaded brake circuit and the trailer's brake circuit is too low, the display message shows the (!) symbol. Possible causes: ● Too much compressed air was used. ● There is a leak in the compressed-air system.

Compressed-air system

Display messages	Possible causes/consequences and ▶ solutions
	Danger **Risk of accident due to leaking compressed-air brake system** The operating and road safety of the vehicle is jeopardised. ▶ Park the vehicle safely as soon as possible. ▶ Apply the parking brake. ▶ Fill the compressed-air system by starting the engine. ◁ The (!) warning lamp goes off and you can continue the journey. ▽ The (!) warning light does not go off. ▶ Check that the compressed air brake system is not leaking (→ Page 234). ▽ The (!) warning lamp does not go off, the compressed-air brake system has been checked for leaks. ▶ Have the compressed-air brake system checked at a qualified specialist workshop.

Vehicle and electrical system

Display messages	Possible causes/consequences and ▶ solutions
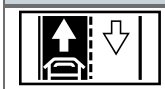 Left-hand traffic detected or 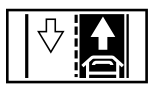 Right-hand traffic detected	Additional text : Check setting for traffic direction. The traffic direction detected by the vehicle deviates from the setting stored in the multimedia system. The traffic direction set in the multimedia system has an effect on the warning/monitoring range of Sideguard Assist/ Active Sideguard Assist (→ Page 311) and on the road illumination for Matrix LED headlamps (L1K) (→ Page 126). ▶ Check the setting stored in the multimedia system in the Functions ▶▶ Assistance systems ▶▶ Traffic direction menu and change if necessary.
 Energy-saving mode active	Additional text : Electrical consumers are switched off In addition to the display message, the indicator lamp in the status area lights up. The engine is switched off and the battery charge level is low. The following electrical consumers will automatically be deactivated: • Audio device/subwoofer • Cigarette lighter/refrigerator box • 24 V sockets/12 V sockets • 230 V socket • 1st switch for non-MB body (e.g. load compartment lamp) • Stowage compartment lamp above the windscreen • Electric stationary air-conditioning system/seat heating • Reading lamps/night lighting/rear stowage compartment lighting/ambient living area light • Wireless charging (mobile phone)/USB charging function • 12 V port for body manufacturers • Opening function of the sliding or tilting roof • Heating for outside mirrors/heating for compressed-air dryer/heating for berth

Display messages	Possible causes/consequences and ▶ solutions
	The duration of actuation will be shortened for the following functions: ● Automatic activation of the interior lighting ● Switch-off delay time of the exterior lighting ▶ If necessary, start the vehicle. ◁ When you start the vehicle, the electrical consumers will be available again.
Battery charge level cannot be detected	Additional text : Visit workshop Energy-saving mode, battery charge level warning and alternator management warning unavailable The measurement values for the battery charge level are not available. No warning will be issued for these in the event of a critical battery charge level. ▶ If electrical consumers are switched on when the engine is switched off, be mindful of the electricity consumption. ▶ Have the electrical system checked at a qualified specialist workshop.
Battery charge level too low Start engine.	Additional text : Please start the engine and/or charge the battery In addition to the display message, three short warning tones will sound and the indicator lamp in the status area will light up. The vehicle is switched off and the battery charge level is too low. ▶ Start the vehicle. or ▶ Charge the battery (→ Page 439). ▶ Switch off electrical consumers that are not required, e.g. climate control.
Overvoltage	Additional text : Stop vehicle Driving characteristics changed The indicator lamp in the instrument cluster also lights up. The voltage in the batteries is too high.

Display messages	Possible causes/consequences and ▶ solutions
	Warning **Risk of accident due to altered voltage in the vehicle electrical system** The vehicle's driving characteristics may change. The operating and road safety of the vehicle is jeopardised. ▶ Stop the vehicle safely as soon as possible. Pay attention to the traffic conditions. ▶ Switch off the vehicle. ▶ Consult a qualified specialist workshop.
Undervoltage	Supplementary text while driving : Stop vehicle Driving characteristics changed Supplementary text if the vehicle is stationary : If possible, charge battery If fault persists, contact service The indicator lamp in the instrument cluster status area also lights up. **Warning** **Risk of accident due to altered voltage in the vehicle electrical system** The vehicle's driving characteristics may change. The operating and road safety of the vehicle is jeopardised. ▶ Stop the vehicle safely as soon as possible. Pay attention to the traffic conditions. ▶ Switch off the vehicle. ▶ Consult a qualified specialist workshop. ▶ Stop the vehicle. ▶ Charge the battery (→ Page 439). If the malfunction persists: ▶ Consult a qualified specialist workshop.
Alternator fault	Additional text : Discharging battery... Stop vehicle Contact service In addition to the display message, the indicator lamp in the status area lights up. The three-phase alternator is faulty or the poly-V-belt has torn.

Vehicle and electrical system

Display messages	Possible causes/consequences and ▶ solutions
	Warning **Risk of accident due to altered or missing charging voltage of the alternator** The vehicle's driving and braking characteristics may change. ▶ Have the vehicle checked at a qualified specialist workshop immediately.
Starter battery failure cannot be detected	Additional text : Stop vehicle. Contact service centre. The indicator lamp in the instrument cluster also lights up. The 24 V on-board electrical system battery is malfunctioning. The electric power steering may fail unexpectedly. ▶ Stop the vehicle immediately in accordance with the traffic conditions. Do not continue driving! ▶ Consult a qualified specialist workshop.
Start battery malfunction	Additional text : Stop vehicle. Contact service centre. The indicator lamp in the instrument cluster also lights up. The 24 V on-board electrical system battery is malfunctioning. The electric power steering may fail unexpectedly. ▶ Stop the vehicle immediately in accordance with the traffic conditions. Do not continue driving! ▶ Consult a qualified specialist workshop.

Driving systems and steering

Display messages	Possible causes/consequences and ▶ solutions
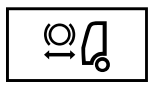 Emergency braking finished	Active Brake Assist has automatically triggered an emergency braking manoeuvre (maximum full-stop braking) and the emergency braking manoeuvre has been completed. ▶ Remove the vehicle from the danger zone as quickly as possible, paying attention to road and traffic conditions as you do so. ▶ Stop the vehicle, paying attention to road and traffic conditions. ▶ Make sure that the vehicle is in proper working order and that the load is secured properly.
 Active Brake Assist not available	Additional text ▸≡: Visit workshop Frequent emergency braking **Warning** **Risk of accident due to malfunction of Active Drive Assist** If Active Brake Assist is not available, you will not receive any collision warnings. In critical situations, the vehicle will not brake automatically. ▶ If necessary, use the service brake to brake the vehicle. ▶ Have the Active Brake Assist system checked at a qualified specialist workshop.
 Deactivate shunting level.	You are driving faster than approximately 20 km/h in manoeuvring level. If you drive faster than approximately 40 km/h, a warning tone also sounds. **Warning** **Risk of accident due to manoeuvring level** The vehicle's driving and braking characteristics may change. ▶ Adapt your driving style to the conditions when manoeuvring. ▶ Deactivate manoeuvring level (→ Page 339). or

Display messages	Possible causes/consequences and ▶ solutions
	▶ Reduce the speed.
Attention Assist: take a break?	Attention Assist has detected tiredness or increasing lapses in concentration. A warning tone will also sound. ▶ If necessary, take a break. **Note** Take regular and timely breaks during longer journeys.
ESP deactivated Set normal level	In addition, the warning lamp lights up on the instrument cluster. If the chassis is not at driving level while driving, Stability Control Assist is deactivated. **Danger** **Risk of accident due to incorrect driving level** The vehicle's driving and braking characteristics may change. ▶ Set the driving level before you set off. ▶ Set driving level (→ Page 334).
ESP not available	Additional text : Visit workshop. In addition, the warning lamp lights up on the instrument cluster. Stability Control Assist is malfunctioning. **Danger** **Risk of skidding if ESP® has a fault** If ESP® is malfunctioning, ESP® cannot perform vehicle stabilisation. ▶ Continue your journey carefully. ▶ Have ESP® checked at a qualified specialist workshop.

Display messages	Possible causes/consequences and ▶ solutions
 Additional axle, steering fluid level too low	Additional text ▸≡ : Visit workshop. The steering oil level of the additional axle is too low. ▶ Have the additional axle checked at a qualified specialist workshop.
 Steering characteristics changed	Additional text ▸≡: Do not steer when the vehicle is at a standstill. Steer carefully when the vehicle is moving at walking pace. or Please have rectified at next maintenance. The power steering has detected a malfunction. The steering characteristics may change. Strong steering movements in manoeuvring mode can activate emergency operation of the steering. ▶ Stop the vehicle, paying attention to road and traffic conditions. ▶ Switch off the vehicle. ▶ Restart the vehicle. If the error is displayed again or still displayed: ▶ Have the vehicle checked by a qualified specialist workshop.
 Do not turn the steering wheel to the stop	Additional text ▸≡: Active steering wheel return inoperative or Please have rectified at next maintenance. A fault has occurred in the steering control unit. The vehicle's driving characteristics may change. The steering wheel will not return to the straight-ahead position. Do not steer up to the steering stop, otherwise the steering may overheat. ▶ Stop the vehicle, paying attention to road and traffic conditions. ▶ Switch off the vehicle. ▶ Restart the vehicle. If the error is displayed again or still displayed: ▶ Have the vehicle checked by a qualified specialist workshop.

Display messages	Possible causes/consequences and ▶ solutions
Leading/trailing axle centred	The steered additional axle is malfunctioning and has been centred automatically. ▶ Drive on carefully and stop at the next opportunity. Adjust your driving style to the changed handling and steering characteristics. ▶ Stop the vehicle and switch it off. ▶ Restart the vehicle after ten seconds. ◁ The display message will disappear. ◁ The steered additional axle is reactivated. ▽ The display message does not disappear. ▶ Have the steered additional axle checked at a qualified specialist workshop.
Steer. charact. of addit. axle changed	Additional text : Visit workshop. The steered additional axle is malfunctioning and is only steering passively. ▶ Adjust your driving style to the changed driving and steering characteristics. ▶ Stop the vehicle and switch it off. ▶ Restart the vehicle after approximately ten seconds. ◁ The display message will disappear. The steered additional axle is reactivated. If the display message does not disappear: ▶ Have the steered additional axle checked at a qualified specialist workshop.
Power-steering assistance overheated	Additional text : Adapt your driving style. In addition, the warning lamp lights up on the instrument cluster. The steering system of the additional axle is overheated. ▶ Avoid unnecessary steering manoeuvres. ◁ The steering system of the additional axle cools down in operation. or ▶ Stop the vehicle, paying attention to road and traffic conditions. ▶ Switch off the vehicle.

Display messages	Possible causes/consequences and ▶ solutions
	▶ Let the steering gear cool down.
Steer. charact. of addit. axle changed	Additional text : Stop vehicle. Contact service centre. The steered additional axle is malfunctioning and is only steering passively. Stability Control Assist may also have been deactivated as a result. If the Stability Control Assist has been switched off, the display message shows ESP not available. When braking suddenly on a slippery or uneven carriageway, the steerable additional axle may be deactivated. In vehicles with a height-adjustable trailing axle, it is no longer possible to lower the additional axle while the vehicle is moving. **Warning** **Risk of accident due to temporary deactivation of Stability Control Assist** If Stability Control Assist is deactivated due to a faulty steered additional axle, the vehicle's stability is decreased. ▶ Drive on carefully and stop the vehicle safely at the next opportunity. Pay attention to the traffic conditions. ▶ Adjust your driving style to the changed driving and steering characteristics. ▶ Stop the vehicle and switch it off. ▶ Restart the vehicle after approximately ten seconds. ◁ The display message will disappear. The steered additional axle is reactivated. If the display message does not disappear: ▶ Consult a qualified specialist workshop.
Power-steering assistance overheated	Additional text : Stop vehicle Switch off engine In addition, the warning lamp lights up on the instrument cluster. The steering gear has overheated. ▶ Stop the vehicle safely as soon as possible. ▶ Switch off the vehicle. ▶ Let the steering gear cool down. ▶ Restart the vehicle.

Display messages	Possible causes/consequences and ▶ solutions
	When the display message re-appears: ▶ Consult a qualified specialist workshop.
Power steering: function not assured	Additional text : Stop vehicle. Contact service centre. In addition, the warning lamp lights up on the instrument cluster. The vehicle rolls without the engine running. ▶ Stop the vehicle. or ▶ Start the vehicle.
Power steering: function not assured	Additional text : Stop vehicle Check hydraulic steering during shunting Consult service centre In addition, the warning lamp lights up on the instrument cluster. Steering operates in emergency operation mode. **Warning** **Risk of accident due to failure of the hydraulic power steering** The hydraulic power steering has failed. ▶ Stop the vehicle safely as soon as possible. Pay attention to the traffic conditions. ▶ Switch off the vehicle. ▶ Restart the vehicle. If the error is displayed again or still displayed: ▶ Consult a qualified specialist workshop.

Display messages	Possible causes/consequences and ▶ solutions
Power steering: function not assured	Additional text : Stop vehicle. Contact service centre. In addition, the warning lamp lights up on the instrument cluster. A fault has occurred in the electric power steering. **Warning** **Risk of accident due to failure of electric power steering** Power steering is not ensured continuously. ▶ Stop the vehicle safely as soon as possible. Pay attention to the traffic conditions. ▶ Switch off the vehicle. ▶ Restart the vehicle. If the error is displayed again or still displayed: ▶ Consult a qualified specialist workshop.
Lane Keeping Assist not available (Example)	Additional text : Visit workshop Camera calibration faulty Lane Keeping Assist and Attention Assist unavailable **Warning** **Risk of accident due to impairments or unavailable driver assistance/driver safety systems** Driver assistance/driving safety systems may have a fault or be temporarily unavailable. ▶ Drive on carefully.
Lane Keeping Assist not available	Additional text : Visit workshop Lane Keeping Assist and Attention Assist unavailable **Warning** **Risk of accident due to impairments or unavailable driver assistance/driver safety systems** Driver assistance/driving safety systems may have a fault or be temporarily unavailable. ▶ Drive on carefully.

Display messages	Possible causes/consequences and ▶ solutions
Lane Keeping Assist faulty	Additional text: Visit workshop Lane Keeping Assist and Attention Assist unavailable **Warning** **Risk of accident due to impairments or unavailable driver assistance/driver safety systems** Driver assistance/driving safety systems may have a fault or be temporarily unavailable. ▶ Drive on carefully.
Lane Keeping Assist faulty	Additional text: Visit workshop Lane Keeping Assist, left speaker malfunctioning or Visit workshop Lane Keeping Assist, right speaker malfunctioning **Warning** **Risk of accident due to faulty loudspeakers** The left or right speaker is malfunctioning. If a speaker is malfunctioning on one side, Lane Keeping Assist will issue a warning tone from the intact speaker, regardless of the side. It is possible that in this situation, a warning tone may sound on the side opposite to the affected side of the vehicle. ▶ Have Lane Keeping Assist checked at a qualified specialist workshop.
Assistance systems malfunction Front camera temperature too high	Additional text: Reduce interior temperature Multifunction camera temperature too high **If the display message appears while the vehicle is in motion:** The multifunction camera is malfunctioning. In addition, the corresponding indicator lamps of malfunctioning driver assistance/driving safety systems in the instrument cluster may light up.

Display messages	Possible causes/consequences and ▶ solutions
	Warning **Risk of accident due to limited function of the multifunction camera** Driver assistance/driving safety systems may have a fault or be temporarily unavailable. ▶ Drive on carefully. ▶ Have the multifunction camera checked at a qualified specialist workshop as soon as possible. **If the display message appears when the vehicle is parked:** ▶ Reduce the interior temperature, e.g. by ventilating. ▶ Wait until the multifunction camera has cooled down and the display message disappears.
 Assistance systems malfunction Front camera viewing area blocked	Additional text : Clean windscreen In addition, the corresponding indicator lamps of malfunctioning driver assistance/driving safety systems in the instrument cluster may light up. The visibility of the multifunction camera is reduced. Possible causes: ● Dirt on windscreen in multifunction camera's field of vision ● Heavy rain or fog ● The windscreen is steamed up on the inside: Under certain weather conditions, condensation may form on the inside of the windscreen, especially during the winter months. **Warning** **Risk of accident due to impairments or unavailable driver assistance/driver safety systems** Driver assistance/driving safety systems may have a fault or be temporarily unavailable. ▶ Drive on carefully. If the causes no longer apply, the driver assistance and driving safety systems are activated again. The corresponding indicator lamps and the display message in the instrument cluster disappear.

Display messages	Possible causes/consequences and ▶ solutions
	If the display message does not disappear: ▶ Stop the vehicle in accordance with the traffic conditions. ▶ Clean the windscreen where the camera is located (→ Page 421). ▶ Restart the vehicle. If the display message does not disappear: ▶ Have the vehicle checked at a qualified specialist workshop immediately.
 Assistance systems malfunction Distance sensor viewing area blocked	Additional text ▸≡: Clean sensors In addition, the corresponding indicator lamps of malfunctioning driver assistance/driving safety systems in the instrument cluster may light up. There is a distance sensor malfunction. Possible causes: ● Sensor system dirty ● Heavy rainfall ● Longer journey next to uniform structures close to the carriageway, e.g. tunnel walls **Warning** **Risk of accident due to impairments or unavailable driver assistance/driver safety systems** Driver assistance/driving safety systems may have a fault or be temporarily unavailable. ▶ Drive on carefully. If the causes no longer apply, the driver assistance and driving safety systems are activated again. The corresponding indicator lamps and the display message in the instrument cluster disappear. If the display message does not disappear: ▶ Stop the vehicle in accordance with the traffic conditions. ▶ Clean the covers of the distance sensors on the front bumper and the side mud guards with water (→ Page 421).

Display messages	Possible causes/consequences and ▶ solutions
	Note Do not use any dry, rough or hard cloths and do not scrub or scratch. ▶ Restart the vehicle. If the display message does not disappear: ▶ Have the vehicle checked at a qualified specialist workshop immediately.
 Assistance systems malfunction	The indicator lamp also lights up on the instrument cluster. **Warning** **Risk of accident due to impairments or unavailable driver assistance/driver safety systems** Driver assistance/driving safety systems may have a fault or be temporarily unavailable. ▶ Drive on carefully. ▶ Have the vehicle checked by a qualified specialist workshop.

Transmission and clutch

Display messages	Possible causes/consequences and ▶ solutions
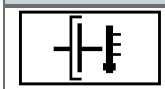 Clutch under heavy strain	The clutch is under heavy load. ▶ Pull away in first gear only. ▶ Keep the process of pulling away or manoeuvring as brief as possible.
 Transmission: oil temperature too high	Additional text ▸☰: Visit workshop. The permissible operating temperature of the transmission or retarder has been reached. The temperature of the transmission oil or coolant is excessive. This may be caused by an oil level in the transmission that is low or too high. If the oil temperature in the transmission remains elevated, the transmission may be damaged. ▶ Switch off the retarder. ▶ Stop the vehicle as soon as possible, taking into account the road and traffic conditions. ▶ Apply the parking brake and shift the automatic transmission to neutral position. ▶ Leave the vehicle running at a speed of 1200 rpm to 1500 rpm for between two and three minutes. ▶ Switch off the vehicle. ▶ If the oil temperature does not drop, check the oil level in the automatic transmission (→ Page 437). ▶ If the display message continues to be displayed, contact a qualified specialist workshop and have the fault rectified.
 Clutch under heavy strain	The permissible operating temperature of the clutch has been reached. Further load poses a risk of clutch damage. ▶ Shift to a lower gear for manoeuvring or moving off. ▶ Keep the process of moving off or manoeuvring as brief as possible. Otherwise the clutch will be overloaded.
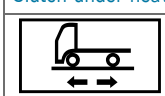 Press shunting switch for longer	You have pressed the switch for manoeuvring mode too quickly. ▶ Press the switch again.

Display messages	Possible causes/consequences and ▶ solutions
Press shunting switch faster.	If the display message disappears again, you have pressed the manoeuvring mode switch for too long. If the display message remains on, the switch is defective. If the display message disappears again: ▶ Press the switch again. If the display message remains on: ▶ Have the switch checked at a qualified specialist workshop.
Set vehicle direction switch to D	The transmission is in position N and the vehicle speed is above 10 km/h. If the power supply is simultaneously malfunctioning, the power steering function may be impaired. ▶ Shift the transmission to D.
Gearshift blocked	Additional text: Visit workshop. The vehicle's steering is faulty. Power steering may be impaired or may not be operational. For safety reasons, gearshifts are only possible below a vehicle speed of 10 km/h. ▶ Drive carefully to the nearest qualified specialist workshop. Adjust your driving style to the changed handling and steering characteristics. ▶ Have the power steering checked at a qualified specialist workshop. or ▶ Stop the vehicle in a safe place and notify a qualified specialist workshop.
Transmission faulty	Additional text: Visit workshop.

Display messages	Possible causes/consequences and ▶ solutions
	Note **Damage due to system malfunction** Transmission fault. Continuing the journey is possible with restrictions. ▶ Have the transmission checked at a qualified specialist workshop.
Transmission faulty (only vehicles with automatic transmission)	Additional text [▸≡]: Visit workshop. **Note** **Damage due to system malfunction** Automatic transmission has a malfunction. Continuing the journey is possible with restrictions. ▶ Have the automatic transmission checked by a qualified specialist workshop. Depending on the fault, a specialist workshop can provide assistance so you can limp home by specifying fault codes. You can display the fault codes using the automatic transmission push-button (→ Page 438) ▶ Stop the vehicle in accordance with the traffic conditions. ▶ Apply the parking brake. ▶ Switch on the vehicle. ▶ Shift the automatic transmission to neutral position. Display of fault codes via the push-button gearshift: ▶ Simultaneously press the [△] and [▽] buttons on the push-button gearshift twice. ◁ The push-button display shows the 5-digit fault codes one after the other. ▶ To display the next fault code, press the MODE button. ◁ A maximum of five fault codes can be stored. ▶ To exit the fault code display, press the [△] and [▽] buttons of the automatic transmission at the same time. or

Display messages	Possible causes/consequences and ▶ solutions
	▶ Shift the automatic transmission to neutral position.
 Clutch faulty	Additional text [▸≡]: Visit workshop. **Note** **Damage due to system malfunction** Clutch fault. Continuing the journey is possible with restrictions. ▶ Have the clutch checked at a qualified specialist workshop.
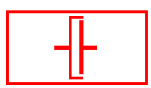 Clutch faulty	Additional text [▸≡]: Stop vehicle. Contact service centre. **Danger** **Risk of accident due to low supply pressure** The transmission no longer shifts. The supply pressure in the transmission/clutch circuit may be too low. ▶ Park the vehicle safely as soon as possible. ▶ Apply the parking brake. ▶ If the display message Transmission/clutch reserve pressure too low appears: Let the engine run until there is sufficient supply pressure in the transmission/clutch circuit again. ◁ The display message Transmission/clutch reserve pressure too low will disappear. ▶ Switch off the vehicle. ▶ Restart the vehicle after approximately ten seconds. ▶ When the display message Clutch faulty Stop vehicle. Contact service centre. re-appears: Activate back-up mode. ▶ If it is not possible to activate back-up mode: Consult a qualified specialist workshop.

Transmission and clutch

Display messages	Possible causes/consequences and ▶ solutions
 Clutch fluid temperature XXX XXX	Additional text: 180°C (example) The oil temperature in the turbo retarder clutch is too high. ▶ Shift to a lower gear. ◁ The engine speed will increase and the dry clutch will be closed.
 Retarder: oil temperature too high	The oil temperature in the retarder is too high. ▶ Shift to a lower gear. ◁ The engine speed and the engine braking effect will increase.
 Transmission in off-road reduction ratio	You are driving faster than approximately 50 km/h with an off-road gear engaged. The temperature in the retarder is too high. ▶ If the off-road gear is engaged, drive at a low engine speed or engage on-road gear.

Engine and cooling

Display messages	Possible causes/consequences and ▶ solutions
 Radiator shutters inoperative (Example)	The upper and/or lower air regulation system is malfunctioning, e.g. due to foreign objects blocking the engine radiator. ▶ Stop the vehicle and switch it off, paying attention to road and traffic conditions. ▶ Check the upper and lower air regulation system for foreign objects and dirt and remove the foreign objects or dirt as necessary. If no foreign objects or dirt can be found or the display message is shown again: ▶ Manually open the air regulation system and lock it in place (→ Page 464). ▶ Have the air regulation system checked at a qualified specialist workshop.
 Drive control faulty	Additional text ▸≡: Visit workshop. The electronic drive control is malfunctioning. ▶ Observe the instructions in the display message.
 Water separator full	Additional text ▸≡: Empty water separator. The washer fluid level in the water separator is too high. ▶ Drain the fuel filter with water separator on the engine (→ Page 460). If the vehicle is equipped with a fuel prefilter: ▶ Check whether the water has been separated in the inspection glass and, if necessary, drain the fuel prefilter (→ Page 460).
 Engine faulty	One of the following systems is malfunctioning: ● Engine ● Engine cooling ● Engine management ● Fuel injection system ▶ Have the systems checked at a qualified specialist workshop.

Engine and cooling

Display messages	Possible causes/consequences and ▶ solutions
 Engine cooling faulty	The poly-V-belt may be damaged or the tension of the poly-V-belt may not be sufficient. ▶ Have the poly-V-belt checked at a qualified specialist workshop.
 Coolant temperature too high	The coolant temperature is too high. Engine power output is automatically reduced. ▶ Reduce the speed. ▶ Shift to a lower gear. or ▶ Stop the vehicle, paying attention to road and traffic conditions. ▶ Switch off the vehicle. ▶ Remove objects that could block the air supply to the radiator, e.g. paper that has blown onto the grille.
 Engine protection: engine power reduced	The coolant temperature is too high. Engine power output is automatically reduced. ▶ Reduce the speed. ▶ Shift to a lower gear. or ▶ Stop the vehicle, paying attention to road and traffic conditions. ▶ Switch off the vehicle. ▶ Remove objects that could block the air supply to the radiator, e.g. paper that has blown onto the grille.
 Coolant temperature too high	Additional text : Stop vehicle Switch off engine In addition to the display message, the indicator lamp in the status area lights up. ▶ Park the vehicle safely as soon as possible. ▶ Switch off the vehicle. ▶ Apply the parking brake. ▶ Let the engine cooling system cool down.

Display messages	Possible causes/consequences and ▶ solutions
Coolant level too low	Additional text : Top up coolant. The coolant level has dropped below the normal fill level. The yellow display message is shown when the engine is cold and the vehicle is switched on. ▶ Top up coolant (→ Page 430). ▶ If the coolant level drops again, immediately have the cooling system checked at a qualified specialist workshop.
Coolant pressure regulation faulty	The electrical connector or the hose fitting on the coolant reserve tank is loose. The turquoise cap on the coolant expansion reservoir is not tight. ▶ Check the electrical connector and the hose fitting on the coolant expansion reservoir . ▶ If you detect any leakage, have the engine cooling system checked at a qualified specialist workshop.
Coolant level too low	Additional text : Top up coolant Coolant temperature not conclusive In addition to the display message, the indicator lamp in the status area lights up. The coolant temperature display cannot be relied upon for as long as the indicator lamp is on. The coolant level has dropped at least three litres below normal level. The engine's operating safety is at risk. ▶ Park the vehicle safely as soon as possible. ▶ Switch off the vehicle. ▶ Apply the parking brake. ▶ Top up coolant (→ Page 430). ▶ Have the engine cooling system checked for leak tightness at a qualified specialist workshop.
Engine oil pressure too low	Additional text : Stop vehicle Switch off engine In addition to the display message, the indicator lamp in the status area lights up. The oil pressure in the engine is too low. The engine's operating safety is at risk. ▶ Park the vehicle safely as soon as possible. ▶ Switch off the vehicle. ▶ Apply the parking brake.

Engine and cooling

Display messages	Possible causes/consequences and ▶ solutions
	▶ Check the oil level in the engine and refill engine oil (→ Page 436). ▶ Notify a qualified specialist workshop.

Tyres

Display messages	Possible causes/consequences and ▶ solutions
Sp. wheel tyre press. sens.: battery low	Additional text : Replace tyre pressure sensor In addition to the display message, the indicator lamp in the instrument cluster lights up. The battery of the tyre pressure sensor in the spare wheel is flat. ▶ Have the tyre pressure sensor replaced at a qualified specialist workshop.
Tyre pressure in spare wheel too low	Additional text : Check and correct tyre pressure. In addition to the display message, the indicator lamp in the instrument cluster lights up. The tyre pressure in the spare wheel is too low. ▶ Check the tyre pressure and correct it if necessary.
Spare wheel tyre pressure monitor faulty	Additional text : Spare wheel tyre pressure monitor failure In addition to the display message, the indicator lamp in the instrument cluster lights up. The tyre pressure monitor of the spare wheel is malfunctioning. ▶ Have the tyre pressure sensor replaced at a qualified specialist workshop.
Tyre pressure too low	Additional text : Check and correct tyre pressure. In addition to the display message, the indicator lamp in the instrument cluster lights up. The tyre pressure in one or more of the tyres is too low. The tyres in question appear in yellow or red in the Suspension menu, Tyres menu window of the multimedia system. ▶ Check the tyre pressure and correct it if necessary.
Tyre pressure too high	Additional text : Check and correct tyre pressure. In addition to the display message, the indicator lamp in the instrument cluster lights up. The pressure in one or more tyres has increased significantly while driving. The tyres in question appear in colour in the Suspension menu, Tyres menu window of the multimedia system. ▶ Stop the vehicle without steering or braking suddenly. Pay attention to the traffic conditions.

Tyres

Display messages	Possible causes/consequences and ▶ solutions
	▶ Check the tyre pressure and correct it if necessary.
Tyre temperature too high	Additional text [▸≡]: Reduce speed drastically. In addition to the display message, the [(!)] indicator lamp in the instrument cluster lights up. **Danger** **Risk of accident due to excessive tyre temperature** The temperature in one or more tyres has risen significantly while driving. ● The brakes may have overheated. ● The tyre pressure may be too low. The vehicle's driving and braking characteristics may change. ▶ Continue your journey carefully. ▶ Drive on slowly. ◁ The tyre temperature is lowered by the airflow. ▶ If the tyre temperature has fallen, have the tyres and brakes checked and the cause of the problem rectified at a qualified specialist workshop.
Tyre pressure sensor: battery low	Additional text [▸≡]: Replace tyre pressure sensor In addition to the display message, the [(!)] indicator lamp in the instrument cluster lights up. The battery of a tyre pressure sensor is flat. ▶ Have the tyre pressure sensor replaced at a qualified specialist workshop.
Tyre pressure sensor faulty	Additional text [▸≡]: Replace tyre pressure sensor or Failure, tyre pressure monitor for one/multiple tyre(s) The tyre pressure sensor is malfunctioning on one of the tyres. ▶ Have the tyre pressure sensor replaced at a qualified specialist workshop.

Display messages	Possible causes/consequences and ▶ solutions
Tyre pressure monitor faulty	Additional text ▸≡: Failure, tyre pressure monitor for one/multiple tyre(s) The tyre pressure monitoring system on one or more tyres has failed. No signal is received by one or more tyre pressure sensors, e.g. due to a source of radio interference. ▶ Drive on. ◁ As soon as the cause is rectified, the tyre pressure monitor is reactivated and the tyre pressure level is displayed again. ▽ If the tyre monitoring is not automatically activated after a long journey: ▶ Have the tyre pressure monitoring system checked in a qualified specialist workshop.
Tyre pressure monitor faulty	The tyre pressure monitoring system is faulty. ▶ Drive on. ◁ As soon as the cause is rectified, the tyre pressure monitor is reactivated and the tyre pressure level is displayed again. ▽ If the tyre pressure monitor does not activate automatically after a long journey: ▶ Have the tyre pressure monitoring system checked in a qualified specialist workshop.
Tyre detection not possible	The wheel detection on the tyre pressure monitor is malfunctioning. ▶ Drive the vehicle at a speed of over 30 km/h for at least ten minutes. ▽ If the display message continues to be displayed: ▶ Have the tyre pressure monitoring system checked by a qualified specialist workshop.
Tyre detection not possible	Additional text ▸≡: Lower additional axle The trailing axle is raised while the tyre pressure monitoring system is performing automatic wheel detection. ▶ Lower the trailing axle (→ Page 341).
Tyre detection not possible	Additional text ▸≡: Unlock differential ▶ The differential locks are activated. As a result, wheel detection is not possible on the locked axle. ▶ Disengage the differential locks (→ Page 268).

Tyres

Display messages	Possible causes/consequences and ▶ solutions
Tyre pressure monitor inoperative	In addition to the display message, the indicator lamp in the instrument cluster flashes for 75 seconds and then lights up permanently. The tyre pressure monitoring system is faulty. ▶ Visit a qualified specialist workshop.
Flat tyre	Additional text : Change tyre. In addition to the display message, the indicator lamp in the instrument cluster lights up. The tyre pressure has suddenly dropped in one or more tyres. A warning tone will also sound. The tyre in question is displayed in red in the Suspension menu, Tyres menu window of the multimedia system. **Warning** **Risk of accident due to a faulty wheel/tyre** Driving with a faulty wheel/tyre can change the vehicle's handling and braking characteristics. ▶ Stop the vehicle as soon as possible, paying attention to road and traffic conditions, and avoiding abrupt steering and braking manoeuvres. Pay attention to the traffic conditions. ▶ Replace a faulty wheel or tyre. **Concrete mixer vehicle with single tyres:** The vehicle is designed in such a way that, in the event of a tyre failure on a rear axle, the vehicle can continue to travel a short distance at reduced speed. This allows you to find a safe place to stop the vehicle for the purposes of changing a wheel. ▶ Check the scale of the damage to the wheel (tyre and disc wheel). ▶ **If the defective tyre constitutes a hazard to road users:** Do not continue driving. ▶ Replace the wheel immediately (→ Page 472). or ▶ **If the defective tyre does not constitute a hazard to road users:** Continue the journey to the next opportunity to stop. ▶ Drive at a maximum speed of 40 km/h when driving straight ahead.

Display messages	Possible causes/consequences and ▶ solutions
	▶ Drive at a maximum speed of 15 km/h when cornering.
Fixed wheel	Additional text : Stop vehicle and release locked wheel In addition to the display message, the indicator lamp in the instrument cluster lights up. At least one wheel is blocked. A warning tone will also sound. The tyre in question is displayed in red in the Suspension menu, Tyres menu window of the multimedia system. **Warning** **Risk of accident due to brakes locking** Blocking one or more wheels can alter the vehicle's handling. ▶ Stop the vehicle as soon as possible. Pay attention to the traffic conditions. ▶ Check the affected wheel position and release the blocking if necessary.

Key

Display messages	Possible causes/consequences and ▶ solutions
 Use replacement key	▶ Use the replacement key.
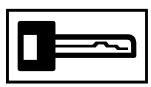 Key not recognised	The key is currently not detected. The key must be in the cab. ▶ Change the location of the key in the vehicle. If the key is still not detected: ▶ Hold the key next to the Start/Stop button and start the vehicle.
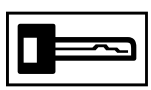 Press and hold EMERGENCY OFF button for 3s	The display message appears if you briefly press the Start/Stop button while driving. In an emergency situation, you can switch off the vehicle while the vehicle is in motion by pressing and holding the Start/Stop button. **Danger** **Risk of accident when the vehicle is switched off while driving** If you switch off the vehicle while driving, safety-relevant functions will be restricted or no longer available. You will then need to exert considerably more power when steering, for example. ▶ For this reason alone, you should never switch off the vehicle while you are driving. ▶ If you want to switch off the vehicle, press and hold the Start/Stop button for around three seconds.
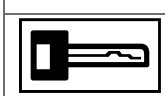 Hold key to contact point as shown in Owner's Manual	Key detection is malfunctioning. ▶ Change the location of the key in the vehicle. ▶ Hold the key to the right of the Start/Stop button and start the vehicle.

Display messages	Possible causes/consequences and ▶ solutions
Incorrect key	You are using an incorrect key. ▶ Use the correct key.
Please replace key.	Additional text ▸≡: Please visit a workshop and have the key replaced. The key must be replaced. ▶ Visit a qualified workshop.
Please replace ignition key battery.	The key's battery is flat. ▶ Replace the battery (→ Page 60).
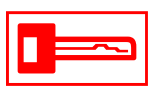 Key not recognised	Unable to detect the key and it may no longer be in the vehicle. If the key is no longer in the vehicle and you switch the vehicle off: ● The vehicle can no longer be started ● The vehicle cannot be centrally locked ▶ Ensure that the key is in the vehicle.

Vehicle data

Vehicle data

Model:		
Vehicle identification number:		
Initial registration: (or date of delivery of new vehicle)		
Paintwork		
Licence plate	Licence plate	Licence plate
Licence plate	Licence plate	Licence plate

Body manufacturer

The following work or modifications have been carried out, e.g. to the chassis, cab, body (box body), or to additional assemblies/add-on equipment that has been fitted:

▶

▶

▶

▶

The vehicle has been subjected to a quality control check and/or final inspection with regard to the work or modifications carried out on the vehicle. No faults or malfunctions were found.

Please tick:

☐ Work and execution were carried out in accordance with the Mercedes-Benz Trucks body/equipment mounting directives.

☐ The certificate of non-objection was obtained from Daimler Truck AG, at the department responsible for body/equipment approval (see Mercedes-Benz Trucks body/equipment mounting directives).

☐ Operating instructions and maintenance instructions for the work, modifications, or the assemblies fitted have been placed in the vehicle.

City/town

▶

Date

▶

Mileage (km)

▶

Operating hours (OH)

▶

Signature

▶

Signature/Stamp of the body manufacturer

Body manufacturer

The following work or modifications have been carried out, e.g. to the chassis, cab, body (box body), or to additional assemblies/add-on equipment that has been fitted:

▸

▸

▸

▸

The vehicle has been subjected to a quality control check and/or final inspection with regard to the work or modifications carried out on the vehicle. No faults or malfunctions were found.

Please tick:

☐ Work and execution were carried out in accordance with the Mercedes-Benz Trucks body/equipment mounting directives.

☐ The certificate of non-objection was obtained from Daimler Truck AG, at the department responsible for body/equipment approval (see Mercedes-Benz Trucks body/equipment mounting directives).

☐ Operating instructions and maintenance instructions for the work, modifications, or the assemblies fitted have been placed in the vehicle.

City/town

▸

Date

▸

Mileage (km)

▸

Operating hours (OH)

▸

Signature

▸

Signature/Stamp of the body manufacturer

Body manufacturer

The following work or modifications have been carried out, e.g. to the chassis, cab, body (box body), or to additional assemblies/add-on equipment that has been fitted:

▸

▸

▸

▸

The vehicle has been subjected to a quality control check and/or final inspection with regard to the work or modifications carried out on the vehicle. No faults or malfunctions were found.

Please tick:

☐ Work and execution were carried out in accordance with the Mercedes-Benz Trucks body/equipment mounting directives.

☐ The certificate of non-objection was obtained from Daimler Truck AG, at the department responsible for body/equipment approval (see Mercedes-Benz Trucks body/equipment mounting directives).

☐ Operating instructions and maintenance instructions for the work, modifications, or the assemblies fitted have been placed in the vehicle.

City/town

▸

Date

▸

Mileage (km)

▸

Operating hours (OH)

▸

Signature

▸

Signature/Stamp of the body manufacturer

Body manufacturer

The following work or modifications have been carried out, e.g. to the chassis, cab, body (box body), or to additional assemblies/add-on equipment that has been fitted:

▸

▸

▸

▸

The vehicle has been subjected to a quality control check and/or final inspection with regard to the work or modifications carried out on the vehicle. No faults or malfunctions were found.

Please tick:

☐ Work and execution were carried out in accordance with the Mercedes-Benz Trucks body/equipment mounting directives.

☐ The certificate of non-objection was obtained from Daimler Truck AG, at the department responsible for body/equipment approval (see Mercedes-Benz Trucks body/equipment mounting directives).

☐ Operating instructions and maintenance instructions for the work, modifications, or the assemblies fitted have been placed in the vehicle.

City/town

▸

Date

▸

Mileage (km)

▸

Operating hours (OH)

▸

Signature

▸

Signature/Stamp of the body manufacturer

Body manufacturer

The following work or modifications have been carried out, e.g. to the chassis, cab, body (box body), or to additional assemblies/add-on equipment that has been fitted:

▸

▸

▸

▸

The vehicle has been subjected to a quality control check and/or final inspection with regard to the work or modifications carried out on the vehicle. No faults or malfunctions were found.

Please tick:

☐ Work and execution were carried out in accordance with the Mercedes-Benz Trucks body/equipment mounting directives.

☐ The certificate of non-objection was obtained from Daimler Truck AG, at the department responsible for body/equipment approval (see Mercedes-Benz Trucks body/equipment mounting directives).

☐ Operating instructions and maintenance instructions for the work, modifications, or the assemblies fitted have been placed in the vehicle.

City/town

▸

Date

▸

Mileage (km)

▸

Operating hours (OH)

▸

Signature

▸

Signature/Stamp of the body manufacturer

2

230 V socket 135

24°V on-board electrical system battery
Transport mode 447

24h breakdown assistance 426

A

ABS (anti-lock braking system)
Braking with anti-lock protection 236
Display check 235
Function 235

Active Brake Assist
Collision warning 298
deactivation/activation 297
Emergency braking 298
Overview 294

Active Drive Assist
Activating and deactivating Lane Departure Protection (LDP) 328
Activating/deactivating steering intervention 321
Deactivating and activating Lane Keeping 326
Emergency steering function 329
Emergency Stop Assist (ESA) 326
Lane Departure Protection function (LDP) 327
Lane Keeping function (LK) 323
Lateral distance control function 321
Longitudinal distance control function 321
Notes 321

Active Sideguard Assist
Activating/deactivating steering intervention 321
Deactivate/activate warning tone 320
Deactivating and activating brake intervention 320
Function and notes 311
Interrupting the brake application 320
Switching the warning tone on/off above 60 km/h 321

AdBlue®
Additives 535
Display 161
High outside temperatures 535
Low outside temperatures 535
Notes 367, 535
Purity 535
refuelling 367
Select the status indicator 168
Storage 535
System check after a malfunction 168
Tank 361
Waste disposal 535

Adding an intermediate destination 190

Additional axle
Notes on starting-off aid 340
Raising/lowering the leading axle 341
Raising/lowering the trailing axle 341

Steerable 342
Switching starting-off aid on/off 341

Additional headlamps
activation/deactivation 102

Adjustable backrest
Setting 82

Adjusting power steering 265
Adjusting the air vents 158
Adjusting the seat belt height 74
Adjusting the steering wheel 88

Air conditioning
Activating/deactivating residual heat utilisation 153
Adjusting the air vents 158
Auxiliary heating 153
Cleaning the coarse filter for heating and climate control 434
Defrosting the windows 152
Notes 149
Notes on air vents 158
Notes on cooling with air dehumidification 151
Overview (multimedia system) 150
Refrigerant 531
Refrigerant filling capacity 531
Setting the air distribution 152
Setting the airflow 152
Setting the temperature 152
Stationary air conditioning system 156
Switching air-conditioning system on/off 151
Switching air-recirculation mode on/off 152
Switching cooling with air dehumidification on/off 151

Air distribution
Adjusting (heating/air-conditioning system) 152

Air regulation system
Opening and closing 464

Airbag
Activation 39
Driver's airbag 44
Installation location 44
Limited protection 45
Protection provided 44

Airflow
Adjusting (heating/air-conditioning system) 152

Air-recirculation mode
activation/deactivation 152

Alarm clock
setting 183

Alcohol tester 223

Android Auto
call up 207
Connecting a mobile phone 206
Ending 207
Exit 207
Note 206
Overview 206

Animals
Pets in the vehicle 51

anti-jackknife brake
Function and notes 240

Apple CarPlay®
call up 206
Connecting an iPhone® 205
ending 206
Exit 205
Notes 205
Overview 205
Transferred vehicle data 207

Applications using the operating strip
to be called up 179

ASR (acceleration skid control system)
deactivation/activation 266
Function and notes 266

Assemblies
Check for leaks 439

Assistance systems
Notes 220

ATA (Anti-Theft Alarm system)
activation/deactivation 58
Alarm 57
Notes 57
Panic alarm 59
Prior to start-up 58
Problems (malfunction) 61
Switching on with interior motion sensor 58
Switching on without interior motion sensor 58
Vehicles for transport of hazardous goods 57

Attachments 3

Attention Assist
deactivation/activation 311
Function and notes 309

Audio equipment
General notes 145
Operating (bunk switch panel) 145

Automated manual transmission
Automatic and manual drive program 251
Drive program selection 252
Driving in the automatic drive program 258
EcoRoll mode and crawler mode 253
Manual drive program 259
Mercedes PowerShift 250
Multifunction lever and gear display 250
Notes on stopping and pulling away 256
Pulling away 257
Rocking-free function 256
Stopping 257
Switching crawler mode on and off (button) 255
Switching rocking-free function on/off (button) 256

Automatic driving lights
activation/deactivation 102

Automatic engine speed increase
On-board electrical system voltage low 229

Automatic engine start/stop for refrigerated vehicles 223

Automatic transmission
Checking the oil level 437
Driving modes 261
Driving tips 261

Push-button gearshift and gear display 260
Transmission oil level fault codes 438

AUX socket 133

Auxiliary heating
Engine preheating 155
Forced switch-off 154
Immediate heating mode 155
Notes 153
Setting the switch-on time 155

Axle loads
Multimedia system display 262
Notes on axle/wheel loads 262
permissible axle loads 518
Setting the axle load display . . . 262

Axle reduction ratio 518

B

Baby
Pregnancy (seat belt) 42

Battery
Battery box 442
Battery disconnect switch (ADR vehicles) 131
Battery disconnect switch (excluding ADR vehicles) 130
Charging 447
Checking the fluid level 447
Checking the state of charge . . . 447
deactivation/activation 442
Disconnecting and connecting 442
Energy-saving mode 439
Maintenance 445
Notes 439
Starting assistance 490

Battery disconnect switch
Vehicles with ADR classification 131
Vehicles without ADR classification: 130

Blackout screen
Switch on and off 71

Bleeding the fuel system
Bleeding with the hand pump (with fuel prefilter) 460
Bleeding with the hand pump (without fuel prefilter OM 460) 460
Bleeding with the hand pump (without fuel prefilter OM 470/471/473) 460
Bleeding with the starter (without fuel prefilter OM 936) 460
Draining the fuel prefilter 460

BlueTec® exhaust gas aftertreatment system
Status display 168

BlueTec® exhaust gas after-treatment system
Automatic engine speed increase 228

Bluetooth®
Information 183

Bodies 3

Body/equipment mounting directives 3

Brake light
Replacing bulbs 123

Brake system
Checking the compressed-air brake system for leaks 234
HOLD function 244
Notes 233
Technical data 537
Trailers/semitrailers 234

Brakes
ABS 235
ABS display check 235
Anti-lock protection 236
Arrangement of the spring-loaded brake cylinders 497
BAS (Brake Assist System) 236
Checking the compressed-air brake system for leaks 234
Continuous brake 245
Frequent-stop brake 242
Hill holder 243
Notes on the brake system 233
Releasing the spring-loaded brake cylinder 497

Braking assistance
BAS (Brake Assist System) 236

Breakdown
Bleeding the fuel system 460
Chock 452
Flat tyre 465
Jack 452
Pump lever 452
Starting assistance 490
Starting/switching off vehicle with the cab tilted 459
Tilting the cab 453
Vehicle does not start 465

Breakdown assistance
Service Hotline 426
Telediagnostics 450

Bulb change
Brake light 123
Clearance light/side marker lamp 123
Daytime running lights 117
Dipped beam (halogen head-lamps) 117
Fog light 117
High beam 117
Interior lighting 124
Number plate lamp 123
Overview of bulbs 117
Position lamp 117
Rear fog light 123
Reversing light 123
Side marker lamps 124
Tail light 123
Technical data 117
Turn signal light (headlamps) 117
Turn signal light (rear lamp unit) 123
Turn signal light (side) 117
Work lamp (bottom) 124
Work lamp (top) 124

Bulb replacement
Notes 116

Bunk 82

Bunks in the L cab
At top 83
Bottom 80, 84
Car transporter on top 78
Climbing aid 78

Folding the top bunk in and out 78
Narrow on top 78
Overview 78
Seat/daybed combinations 82
Switch panel 33
Wide on top 78

Bunks in the M-cab
Overview 87
Padded shelf 87
split below 88
Standard bunk, bottom 87

C

Cab
Electro-hydraulic tilting system 458
Information about tilting 453
Mechanical-hydraulic tilting system 458

Call
accepting 202
Calls with several participants 203
ending 202
making 202
rejecting 202

Call up the navigation system menu 186

Caller list
Information 204
Making a call 205

Calling up the tachograph menu 185

Calls
Activating functions during a call 203
Incoming call during an existing call 203

Camera
Cleaning (MirrorCam system) 421
Cleaning (multifunction camera) 421
Cleaning (reversing camera) . . . 421

Cancelling a route 193
Car wash (care) 414

Care
After driving off-road or on construction sites 352
Automatic car wash 414
BlueTec® exhaust gas aftertreatment system 415
Camera 421
Chassis protection seal for Mercedes-Benz trucks 415
Cold foam mattress cover 412
Display 412
Engine 423
Exterior lighting 415
High-pressure cleaner 414
Paintwork 415
Plastic trim 412
Radiator surface 415
Seat belt 412
Seat covers 412
Sensors 421
Steering wheel 412
Steps 417
Trim elements 412

Central locking system
Convenience central locking system 55
Interior 53
Outside 53
Problems (malfunction) 61
Problems with the locking system 61

Changing a wheel
Fitting a wheel 472
Fitting the wheel trim 469
Notes 465
Positioning the jack 472
Removing a wheel 472
Removing the spare wheel 465
Removing the wheel trim 469
Retightening the wheel nuts . . . 472

Chassis
raising/lowering 332
Storing/opening the height 333

Chassis protection seal for Mercedes-Benz trucks
Care 415

Check the vehicle height 230

Child seat
Basic instructions 46
Notes on risks and dangers 47
securing on the co-driver's seat 49

Children
Avoiding dangers in the vehicle 47
Basic instructions 46

Chock 452

Cigarette lighter 137

Cleaning the distance sensors 421

Cleaning the exterior 415

Clearance light/side marker lamp
Replacing bulbs 123

Clutch (hydraulics)
Checking 432

Clutch/transmission circuit
Checking supply pressure 229

Coarse filter for heating and climate control 434

Cockpit
Overview 17
Switch panels 29

Combination switch
Overview 36

Compressed-air brake system
Checking for leaks 234
Checking supply pressure 229

Compressed-air connection
Cab 144

Compressed-air dryer
Checking 230

Compressed-air reservoir
Identification plates 540
Information 539

Compressed-air system
Fill with external air 488
Filler connection 488
Supply pressures 537
Technical data 537

Compressed-air system filler connection 488

Condensation in the compressed-air reservoir 230
Configure special destinations 189
Confirmation
Body manufacturer . . . . . 590...595
Vehicle data (form) 590
Consumption
Engine oil 359
Fuel 358
Contacts
Calling (mobile phone) 204
Information 204
Name format 204
Continuous brake
activation/deactivation 246
Notes 245
Convenience central locking system 55
Conversions 3
Coolant
Checking and topping up coolant level 430
Notes 530
Coolant temperature
Switching off the engine 233
Copyright 16
Cornering light 106
Crawler mode
Drive functions 253
CRUISE CONTROL
activation/deactivation 279
Function 278
Overview 278
Cup holder 143
Cyclone dust pre-separator 433

D

Data collection (vehicle) 12
Data protection information
Data storage 16
Data storage
Data protection information 16
Electronic control units 12
Service provider 15
Date
Setting the time and date automatically 182
Setting the time and date manually 182
Daytime running lights
Replacing bulbs 117
Declaration of conformity
Electromagnetic compatibility 7
Jack 7
Wireless vehicle components 519
Deleting intermediate destinations 190
Diagnostic data
Sending 450
Diagnostics connection 8
Diesel
refuelling 532
Diesel fuels
Fuel additives 532
Notes 532
Notes on quality 531

Diesel particulate filter
Automatic regeneration 355
Disabling regeneration 356
Filter change 355
Notes 355
Starting manual regeneration 357

Differential locks
Notes 268
Using 268

Digital maintenance documentation 426

Dipped beam
activation/deactivation 102
Replacing bulbs 117

Display
AdBlue® 161
Care 412
Engine speed 160
On-board computer 169
Outside temperature 163
Tank content 162
Time 163
Total distance 163
Trip distance 163

Display (multimedia system)
Home screen 177
Notes 176
operation 178

Display message
Grey 541
Notes 541
Red 541
Yellow 541

Displaying directions 189

Door lock 53

Door operating unit . . . . . 31...32

Doors
Getting in and out 61
Grab handles (getting in and out) 61
Steps (getting in/out) 61

Drive functions
Crawler mode 253
EcoRoll mode 253
Hydromove 264
Manoeuvring mode 265
Rocking-free function 256

Drive program selection
Mercedes PowerShift 252

Driver assistance systems
Notes 220

Driver's airbag 44

Driving level
raised (vehicles for transportation of bulk cargo, level control) 338

Driving modes
Mercedes PowerShift 251

Driving safety systems
Notes 220

Driving systems
Active Brake Assist 294, 297
Active Drive Assist 321
Active Sideguard Assist 311
Attention Assist 309
CRUISE CONTROL 278
Frontguard Assist 291
Lane Keeping Assist 307
Limiter 277

Notes 220
PPC (Predictive Powertrain Control) 288
Proximity Control Assist 281
Reversing camera 276
Sideguard Assist 311
Specific driving situations 300
Traffic Sign Assist 304
Trailer Stability Assist 329

Driving tips
Diesel particulate filter 355
Economical and environmentally aware driving 353
on loading 343
on running-in 343
Road paver mode 346

E

Eco Support
Multimedia system 353

EcoRoll mode
Drive functions 253

Edit route 190

Electromagnetic compatibility
Declaration of conformity 7

Electronic key 52

Emergency equipment 451

Emergency key 52

Emergency Stop Assist (ESA)
Function 326

Energy-saving mode 439

Engaging/disengaging the front axle 272

Engine
Automatic engine speed increase 228
Oil consumption 359
Problems starting the engine 465
Setting the idle speed 406
start (emergency operation mode) 226
Starting 226
Switching off 233
Technical data 537

Engine electronics (notes) 9

Engine identification plate 518

Engine oil
Application areas 527
Checking the oil level (engine) 436
Consumption 359
Miscibility 527
Oil change 527
Quality 527
SAE classifications 527
Topping up 436

Engine output
Notes on changes 9

Engine run-on 223

Engine speed
Display 160

Entering a destination 187

Entering characters
Function and notes 180
Select keyboard 182
Using the media display 181

Environmental protection
Notes 2

Exterior lighting
activation/deactivation 102
Care 415
Notes on changing a bulb 116
Overview (multimedia system) 101
Rotating beacons 111
Setting the switch-off delay time 102

F

Favourites
Adding 180
call up 180
Overview 180
First-aid kit 451
Flue gas coefficient 518
Fluid level
Coolant 430
Hydraulic clutch actuation system 432
Fog light
activation/deactivation 102
Replacing bulbs 117
Folding table 142
Fording
Notes . . . . . 350...351
Preparing . . . . . 350...351
Free software 16
Frequent-stop brake
activation/deactivation 243
Notes 242
Frontguard Assist
Deactivate/activate warning tone 293
Deactivating and activating warning tone 293
Notes 291
Overview 291
Fuel
Additives 532
Display 162
Notes 362
refuelling 361
Tank 361
Fuel consumption
Economical driving style 353
Notes 358
fuel grade
Diesel 531
Functions
Voice control system 173
Fuses
Assignment diagram 482
Check/switch on automatic circuit breaker 487
Checking/replacing a safety fuse 487
Notes 481
Remove the main fuse carrier cover 481

G

Gear shifting
Mercedes PowerShift 250
Switching crawler mode on and off (button) 255
Genuine Parts 2

H

Handling characteristics (unusual) 501
Headlamp flashing 109
Headlamp range
Setting 102
Headlamps
Basic setting 518
Mask (right-hand/left-hand traffic) 126
Notes on winter operation 130
Overview of bulbs 117
Swinging out 117
Swinging the protective grille out of the way 117
Heated windscreen 130
High beam
activation/deactivation 109
Replacing bulbs 117
High visibility vest 451
Highbeam Assist
activation/deactivation 102
Function 108
High-pressure cleaner (care) 414
Hill holder
activation/deactivation 243
Notes 243
Holding brake
Switch on/off 241
Home screen 179
Home screen (media display) . . . 177
Hydraulic auxiliary drive
activation/deactivation 274
Checking the oil level 275
Cleaning the radiator/fan 275
Notes 273
Hydraulic clutch actuation system
Checking 432
Hydromove
usage 264

I

Idle speed
Setting 406
Ignition lock
Notes 223
Positions 223
Ignition run-on 223
Immobiliser (alcohol tester) 223
Implied warranty (vehicle) 11
Installations 3
Instrument cluster
AdBlue® display 161
Displays 23
Displays 21
Fuel display 162
Notes 160
Odometer 163
Outside temperature display . . . 163
Rev counter 160
Time display 163
Warning/indicator lamps overview 25, 27
Intelligent light 106
Inter-axle lock 268
Interior lighting
activation/deactivation 111

Notes on changing a bulb 116
Overview (multimedia system) 111
Replacing bulbs 124

J

Jack
Declaration of conformity 7
Pump lever 452
Storage location 451

K

Key
Carrying out a lamp check 53
Deactivating a function 53
Electronic key 52
Emergency key 52
Remote control 52
Replacement key 52
Replacing the battery 60
with remote control 52

L

Lamp check 52, 100

Lane Keeping Assist
deactivation/activation 309
Function and notes 307

Language
Notes 184
setting 184

Laptop holder 148
Leading axle 341
Leading/trailing axle (steerable) 342

Left-hand/right-hand traffic
Partially masking headlamps 126

Level control system
Check the vehicle height 230
Forced lowering 336
Loading/unloading the vehicle when the vehicle is switched off 335
Manoeuvring level 339
Notes 330
Operating unit 331
raised driving level (vehicles for transportation of bulk cargo) . . . 338
Raising or lowering the chassis (multimedia system) 333
Raising/lowering the chassis with the operating unit 332
Residual air bellow pressure readjustment 336
Road paver mode 337
Setting the driving level 334
Special functions 336
Storing/opening the chassis height 333

Lighting system
Masking headlights (right-hand/left-hand traffic) 126
Notes on changing a bulb 116

Lights
Adaptive Highbeam Assist 108
Cornering light 106
Exterior lighting 102
Headlamp flashing 109
High beam 109

Intelligent light 106
Interior lighting 111
Turn signal indicators 110

Limiter
Buttons 277
Disabling 277
Function 277
Passive mode 277
Requirements 277
Selection 277
Setting the speed 277
Storing a speed 277
Switching on 277
System limits 277
Viewing a speed 277

Limiting speed
Maximum speed 359

Locking system
ATA (Anti-Theft Alarm system) . . . . . 57...58
Cab lock anti-intrusion protection 57
Central locking system 53
Convenience central locking system 55
Key 52
Key with lamp check 53
Panic alarm 59
Problems with the locking system 61

M

Main beam
Adaptive Highbeam Assist 108

Maintenance
Battery 445
Checking the anti-corrosion protection 439
Coolant 430
Digital maintenance documentation 426
Hydraulic clutch actuation system 432
Maintenance flap 428
Maintenance points under the maintenance flap 429
Maintenance system 427
Notes 427
Oil change intervals for assemblies (information) 426
prescribed service and maintenance work 425
Service information 425

Maintenance flap
Opening/closing 428

Maintenance points 429

Malfunction
Restraint system 39

Manoeuvring and tow-starting/towing away
Coupling jaw 494
Notes 492

Manoeuvring level
Level control system 339

Manoeuvring mode
usage 265

Manual transmission
16–speed transmission 248
9–speed manual transmission 248

Changing gear 247
Changing the shift range 249
Important safety notes 247
Shifting the splitter group (16-speed transmission) 249

Maximum permissible gross vehicle weight
Vehicle identification plate 518

Media display
Entering characters 181
Home screen 177
Notes 176

Media mode
Bluetooth overview 212
Connecting Bluetooth® audio equipment 214
Connecting USB devices 214
Controlling media playback 215
Copyright and trade marks 211
Starting media playback 215
Supported formats and data storage media 210
USB overview 213

Medical aids 11

Mercedes PowerShift
Drive program selection 252
Driving modes 251
Important safety notes 250
Manual drive program 259
Pulling away 257
Stopping 257
Switching crawler mode on and off (button) 255

Mercedes star
Switch the lights on and off 110

Mercedes-Benz Trucks Remote 3.0 App
App 218
Connection to vehicle 219
Download 218
QR code 219
RemoteTruck 3.0 218

MirrorCam system
Activation 94
Adjusting the back edge of the semitrailer/trailer 95
Adjusting the display brightness 95
Adjusting the field of view (manually/automatically) 95
Automatic semitrailer tracking 95
Camera heating 92
Camera operating position 92
Display situations in the display 98
Distance lines 98
Function 92
Important safety notes 91
Malfunction 91
Manoeuvring view 95
Note 521
Operating unit 94
Select the status indicator 92
Symbols in the display 98

Multifunction lever
Overview 36

Multifunction lever and gear display
General notes 250
Multifunction lever 250

Multifunction steering wheel
Adjusting power steering 265

Overview 34
setting 88

Multimedia system
Adjusting the volume 180
Applications 179
Climate control menu 150
Configuring display settings . . . 182
Displaying the axle load 262
Displaying the tyre pressure 500, 502
Displaying the tyre pressure sensor charge level 500
Displaying the tyre temperature 500
Eco Support menu 353
Exterior lighting menu 101
Interior lighting menu 111
Maintenance 427
Resetting 184
Setting the axle load display . . . 262
Sound settings 184
Tyre pressure monitoring system 500
Voice control system 174

Multimedia system (overview) 176

N

Navigation
Adding an intermediate destination 190
Calling up a menu 186
Changing the order of destinations 190
Changing the vehicle weight at an intermediate destination 191
Configure special destinations 189
Connected Traffic Warnings . . . 194
Deleting intermediate destinations 190
Displaying directions 189
Edit route 190
Entering a destination 187
Information on GPS reception 186
Live Traffic 193
Overview of directions menu . . . 190
Overview of the navigation menu . . . . . 187...188
Route planner overview 190
Selecting a destination from addresses 188
Selecting a destination from previous destinations 189
Selecting a destination from saved locations 189
Selecting a destination from saved routes 189
Selecting a destination from special destinations 189
Selecting a destination on the map 189
Start route guidance 191

Navigation (Multimedia Cockpit)
Notes 186

Navigation settings
Map update 196
Maps 196
Settings 196
Vehicle profile 196

Noise
Wheels/tyres 501
Notebook holder 148
Number plate lamp
Replacing bulbs 123

O

Objectives:
Changing the order 190
Occupant safety
Pregnancy (seat belt) 42
Odometer
Display 163
Off-road driving
Adjusting the underride guard 344
Checklist after driving off-road 351
Checklist before driving off-road 347
Cleaning after driving off-road or on construction sites 352
Driving on downhill slopes 349
Driving on sand 351
Notes 347
Preparing for fording . . . . 350...351
Rules for driving off-road 348
Off-road gear
activation/deactivation 273
Oil level
Checking (automatic transmission) 437
On-board computer
Grey display message 541
Instrument cluster 160
Menus (overview) 169
Notes 169
Notes on display messages 541
Notes on events 541
Overview 169
Red display message 541
Yellow display message 541
On-board electronics
Engine electronics 9
Online services
Data storage 15
Open Source Software 16
Open/close the roof hatch 69
Opening/closing the circular roof hatch 69
Operating data
Tyre pressure 538
Operating fluids
AdBlue® 535
Alternative diesel fuels in accordance with DIN EN 15940 535
Coolant 530
Engine oil 527
For drive axles and transmissions 529
Fuel additive 532
fuel grade 531
Notes 527
Refrigerant 531
Transmission oils 529
Operating instructions (vehicle equipment) 5
Operating safety
Changes in engine output 9

Declaration of conformity (electromagnetic compatibility) 7
Declaration of conformity (jack) 7
Information 5
Voice control system 173

Operating strip 179

Operating temperature (coolant temperature) 537

Operating unit
Level control system 331

Operational safety
Declaration of conformity (jack) 7
Declaration of conformity (wireless vehicle components) 519

Outside mirrors
Mirror heater 91
Notes 89
setting 89

Outside temperature
Display 163

Overhead control panel
Overview 19

P

Paintwork
Care 415

Panic alarm 59

Parking brake
Arrangement of the spring-loaded brake cylinders 497
Notes 237
Releasing the spring-loaded brake cylinder 497
usage 238

Parking lights
activation/deactivation 102

Parking up the vehicle
Special measures 449

Permissible axle loads
Vehicle identification plate 518

Pets in the vehicle 51

Pop-up roof
Opening/closing 65

Position lamp
Replacing bulbs 117

Power take-off
Disabling 404
Emergency operation mode 407
Engine-driven 403
Function 403
Preselecting working speed 405
Shifting information 404
Switching on 404
Switching on and off manually 407
Transmission-driven 403

PPC
Notes 288
setting 290

Pregnancy
Information on the correct seat position 42
Seat belt 42

Preparing for a journey
External visual and functional inspection 221
Internal visual and functional inspection 221
Notes 220
Protective grille
Headlamps 117
Rear lamp unit 123
Proximity Control Assist
activation/deactivation 284
Notes 281
Pulling away
Notes 231
Pump lever 452

Q

Qualified specialist workshop 9

R

Radio
activation 208
Direct frequency entry 210
General notes 145
Overview 209
Selecting a station from the station list 210
Selecting a station via the presets 210
Setting the frequency band 209
Storing a station 210
Switch traffic announcements on/off 210
Radio stations
Direct frequency entry 210
storing 210
REACH directive 10
Rear axle ratio 518
Rear fog light
activation/deactivation 102
Replacing bulbs 123
Refrigerant (air-conditioning system) 531
Refrigerator box 140
Refuelling
Before refilling (AdBlue®) 368
Filling order 365
Notes (AdBlue®) 367
Notes (fuel) 362
Refuelling vehicle (fuel) 365
Using the folding ladder (Arocs street sweeper) 366
Registration
Vehicle 10
Remote control
Key 52
Unlock/lock the doors 53
Replacement key 52
Replacing the battery (key) 60
Reserve level display
AdBlue® 161
Fuel 162
Residual heat utilisation
activation/deactivation 153
Restraint system
Basic instructions for children . . . 46
Function in the event of an accident 39
Functionality 39

Limited protection 38
Malfunction 39
Protection provided 38
Self-test 39
Warning beacon 39

Rev counter
Display 160

Reverse gear lock 360

Reverse warning buzzer
activation/deactivation 360

Reverse warning device
Notes 359

Reversing camera 276

Reversing light
Replacing bulbs 123

Right-hand/left-hand traffic
Partially masking headlamps 126

Road paver mode
Level control system 337
Notes 345

Rocking-free function
Drive functions 256
Switching on and off (button) 256

Roller sunblind
Switch on and off 71

Roof position marker lamps
activation/deactivation 102
Replacing a bulb 117

Rotating beacons 111

Route guidance
Cancelling a route 193
Directions 192
Information bar 193
Map view and zoom level 193
Overview 192
Widget for nearby special destinations 193

S

SAE classifications (engine oil) 527

Safety net 82

Seat
Activate/deactivate the seat ventilation 74
Adjusting the seat belt height . . . 74
Correct driver's seat position . . . 72
in the SoloStar Concept 84
Notes 72
operation 74
setting 74
Switching the seat heating on/off 74
Use the entry/exit feature 74

Seat belt
Adjusting the height 43
Care 412
Fastening 43
Limited protection 41
Protection provided 40
Releasing 44
Warning beacon 44
wearing during pregnancy 42

Seat belt tensioners
Activation 39

Seat covers
Care 412
Seat/daybed combinations
in the L-cab 82
Notes on seat/daybed combinations 82
Selecting a destination from addresses 188
Selecting a destination from previous destinations 189
Selecting a destination from saved locations 189
Selecting a destination from saved routes 189
Selecting a destination from special destinations 189
Selecting a destination on the map 189
Selecting a radio station
from the list of stations 210
Selecting radio stations
via the presets 210
Selector lever
Multifunction lever and gear display 250
Sensors
Cleaning (distance sensor) 421
Cleaning (rain and light sensor) 421
Service brake
Notes 233
Service information 425
Service report
Digital maintenance documentation 426
Setting the date format 183
Setting the driving
setting 334
Setting the units 184
Side marker lights
Replacing bulbs 124
Side windows
Important safety notes 63
Open/close 63
resetting 64
Sideguard Assist
Deactivate/activate warning tone 320
Function and notes 311
Sliding sunroof
Opening/closing 65
Smoke detector
Briefly deactivating 138
Checking the function 138
General notes 138
Replacing the battery 138
Snow chains
Checking the wheel clearance 399
Socket
230 V 135
Sockets
Overview 133
SoloStar Concept
Folding the bunk down/up 85
Spare key 52

Spring-loaded brake cylinder
Moving to the drive position . . . 497
Releasing 497
Technical data 539

Stability Control Assist
deactivation 268
Function and notes 267

Start route guidance 191

Starting assistance 490

Starting-off aid
activation/deactivation 341
Notes 340

Stationary air conditioning system
Activating/deactivating immediate cooling mode 157
Notes 156
Setting the switch-on time 157

Status area
Warning/indicator lamps overview 170

Steps
Getting in/out 61
Overview 417

Stopping
Notes 231
Stopping the vehicle 233

Stowage spaces and stowage compartments
Cosmetic mirror 142
In the driver cockpit 140
Notes 139
Refrigerator box 140
Under the bunk 140
Waste receptacle 140
With outside flaps 140

Supply pressure
Checking the compressed-air brake system 229
Checking transmission/clutch circuit 229

SVHC (substances of very high concern) 10

Switch panels
Above the windscreen 19
Bunk 33
Cockpit 29
Combination switch 36
Door . . . . . 31...32
Multifunction lever 36
Multifunction steering wheel 34

Switching off
Notes 231
Switching off the vehicle 233

Switch-off delay time of the exterior lighting
Setting 102

System settings
Resetting the multimedia system 184
Set the time/date format 183
Setting the alarm clock 183
Setting the time and date automatically 182
Setting the time and date manually 182
Setting the time zone 183
Setting the units 184

T

Tachograph
Calling up a menu 185

Menu overview 185
Notes 184
Symbols 185

Tail light
Replacing bulbs 123

Technical data
AdBlue® 535
Brake system 537
Compressed-air reservoir 539
Compressed-air reservoir identification plates 540
Compressed-air system 537
Engine 537
Engine identification plate 518
Engine oil 527
Level control system 539
Maximum permissible tyre pressure 538
Operating temperature (coolant temperature) 537
Permissible difference in tyre pressure 538
Spring-loaded brake cylinder 539
Transmission oils 529
Vehicle identification plate/axle loads 518
Wheel nut tightening torques 539

Telediagnostics
Function 450
Sending data 450

Telephone
Activating functions during a call 203
Calls with several participants 203
Changing the function of a mobile phone 202
Connecting a mobile phone 201
Connecting a second mobile phone (Secure Simple Pairing) 201
Disconnecting a mobile phone 202
Function and notes 146
Incoming call during an existing call 203
Information 200
Interchanging mobile phones (two phone mode) 202
Notes 145, 200
Telephone menu overview 199
Telephone operation 202
Wireless charging (mobile phone) 147
Wireless mobile phone charging 208

Temperature
Adjusting (heating/air-conditioning system) 152
Outside temperature display . . . 163

Time
Messages on the display 163
Set the time/date format 183
Setting the time and date automatically 182
Setting the time and date manually 182
Setting the time zone 183

Tipper mode
After tipping 410
Before tipping 410

Controls 409
On-board computer 409
Rear panel claw-type lock 409
Switchover 409
Tipper control 409
Tipping 410

Tool kit compartment
Opening/closing 450
Vehicle tool kit and emergency equipment 451

Topping up the washer fluid 432

Total distance
Display 163

Touch Control
operation . . . . . 178...179
Setting acoustic operating feedback 178

Touchscreen (multimedia system display)
operation 178

Tow-starting/towing-away
Coupling jaw 494
Front towing eye 494
Notes 492
Rear towing coupling 494

Traffic
Connected Traffic Warnings . . . 194
Live Traffic 193

Traffic announcements
activation/deactivation 210

Traffic Sign Assist
activation/deactivation 307
Function 304
Notes 304
Setting 307

Trailer Stability Assist
activation/deactivation 330
Function 329
Notes 329

Trailers/semitrailers
Attaching a semitrailer 374
Connecting cables and compressed-air lines 377
Connecting or disconnecting hydraulic lines 382
Coupling a trailer 375
Disconnecting cables and compressed-air lines 379
Maintaining and caring for the hydraulic system 384
Notes and control elements of the semitrailer truck hydraulic system 380
Notes on cables and compressed-air lines 376
Notes on coupling/hitching up 372
Notes on the trailer/fifth-wheel coupling 369
Operating data of the hydraulic system 386
Operating the hydraulic system 383
Ramp approach aid 387
Uncouple/decouple 376

Trailing axle 341

Transfer case
Switching the off-road gear on/off 273

Transferred vehicle data
Apple CarPlay® 207

Transmission
16-speed transmission 248
9-speed manual transmission 248
Multifunction lever 250
Shifting gears 247

Transmission oil
Checking the oil level (automatic transmission) 437
Notes 529
Quality 529

Transmission/clutch circuit
Checking supply pressure 229

Transport mode 447

Transverse axle lock 268

Trilex® rim with tyre
Fitting 479
Removing 479

Trilex® wheel
Fitting 478
Removing 478

Trip distance
Display 163

Truck Data Center
Information 216
LED indicator lamp 216
Overview of vehicle computer 216
Sending a Service Call message 217

Truck Data Centre
Fleetboard 218
Mercedes-Benz Trucks Uptime 218

Turbo retarder clutch
Hydromove 264
Manoeuvring mode 265
Pulling away 263
usage 263

Turn signal indicators
activation/deactivation 110
Replacing bulbs (headlamps) 117

Turn signal light
Replacing bulbs (headlamps) 117
Replacing bulbs (lateral) 117
Replacing rear bulbs (rear lamp unit) 123

Tyre age 502

Tyre labelling 499

Tyre pressure
Determining 504
Displaying (multimedia system) 502
Maximum permissible air pressure 538
Notes 502
Permissible difference in pressure 538
Tyre pressure table for single tyres 505
Tyre pressure table for twin tyres 512

Tyre pressure monitoring system
Multimedia system 500

Wheels with tyre pressure sensor 500

Tyre pressure sensor

Displaying the state of charge (multimedia system) 500

Tyre pressure table

Single tyres 505

Twin tyres 512

Tyre tread 502

Tyres

Balancing (information) 499

Checking 502

Checking clearance (when using snow chains) 399

Condition 502

Damage 502

Determining the air pressure . . . 504

Noise 501

Notes 499

Replacing tyres 499

Retreaded tyres 499

Snow chains 398

Unusual handling characteristics 501

U

Underride guard

Notes 344

setting 344

Units

Setting 184

Unlock/lock the doors

Interior 53

Outside 53

USB port (multimedia system)

Connecting devices 214

Using the folding ladder (Arocs street sweeper) 366

V

Vehicle

activating 226

Correct use 10

Data collection 12

deactivating 233

Diagnostics connection 8

Does not start 465

Equipment 5

Forced lowering 336

Identification plate 518

Liability for material defects 11

Limp home mode (start) 226

Medical aids 11

Parking up 449

Qualified specialist workshop 9

REACH directive 10

Registration 10

Starting 226

Starting/switching off with the cab tilted 459

SVHC (substances of very high concern) 10

Switching off 233

tow-starting/towing-away 494

transporting 494

Unlock/lock the doors 53

Vehicle data

Transferring to Apple CarPlay® 207

Vehicle identification plate 518

Vehicle profile 196

Vehicle tool kit and emergency equipment **451**
VIN **518**
Voice assistant
Conducting a dialogue 173
Functions 173
Multimedia system 174
Operation 173
Voice commands
Media 175
Navigation . . . . . 174...175
Telephone 174
Vehicle 175
Voice control system 174
Voice control system
Media voice commands 175
Multimedia system 174
Navigation voice commands . . . . . 174...175
Operating safety 173
Operation . . . . . 173...174
Telephone voice commands . . . 174
Vehicle voice commands 175
Voice commands 174
Voltage converter **134**

W

Warning beacon **451**
Warning tone **360**
Warning triangle **451**
Warning/indicator lamps
Overview 25, 27
Warning/indicator lamps
Status area 170
Warranty **11**
Washing the engine **423**
Waste receptacle **140**
Weight
Load distribution 262
Wheel loads
Notes on axle/wheel loads 262
Wheel nuts
For light-alloy disc wheels 472
For steel disc wheels 472
Retightening 472
Tightening torques 539
Wheels
Checking 502
Checking clearance (when using snow chains) 399
Noise 501
Notes 499
Snow chains 398
Unusual handling characteristics 501
Wi-Fi
Overview 183
Switching on/off 184
Wi-Fi encryption
setting 184
Wind deflector
Diagrams 389
setting 388
Windows
Defrosting 152
Windscreen heater **130**
Windscreen washer system
Notes on winter operation 130
Operation 130

Topping up fluid 432

Windscreen wipers

activation/deactivation 129

Replacing the wiper blades 435

Winter diesel fuel 532

Winter operation

Before the journey 396

Cold start 400

Cold-start limits 399

Driving in low temperatures 401

Low-temperature operating fluids 399

Notes 397

Parking in low temperatures . . . 401

Snow chains 398

Special equipment for operation at low temperatures 399

Winter package

Starting the vehicle at low temperatures 400

Wiper blades

Replacing 435

Wireless charging

Function and notes 146

Mobile phone 147

Wireless vehicle components

Declaration of conformity 519

Work lamps

activation/deactivation 102

Changing bulbs (bottom) 124

Changing bulbs (top) 124

Working mode

Setting the working speed 406

Working speed

Preselecting 405